This document, including the ideas and designs it contains, is an instrument of professional services rendered by the Architect / Engineer. This document may not be used or copied in whole, or in part, for any purpose other than this specific project without the expressed written consent of Westar Architectural Group, Inc.

ABF CONSULTING ENGINEERS
Las Vegas, Nevada 89103
Tel:(702)248-0338
Sparks, Nevada 89431
Tel:(775)674-2222
Phoenix, Arizona 85014
Tel:(602)274-1801
THE ENGINEER ACCEPTS NO LIABILITY NOR RESPONSIBILITY FOR THESE DOCUMENTS UNLESS HIS ORIGINAL SEAL AND SIGNATURE IS AFFIXED.
COPYRIGHT PROTECTED

SEAL

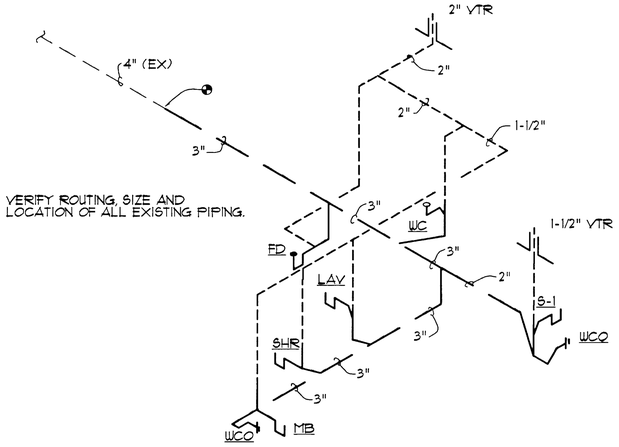

WASTE AND VENT ISOMETRIC- F.S. #2, 7, & 9

NO SCALE

1 / PD.2

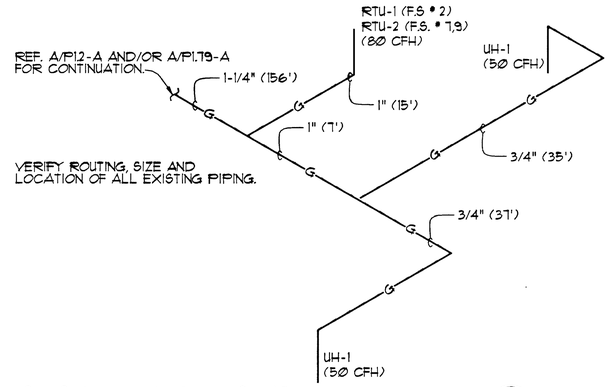

GAS ISOMETRIC- F.S. #2, 7, & 9

NO SCALE

2 / PD.2

VERIFY ROUTING, SIZE AND
LOCATION OF ALL EXISTING PIPING.

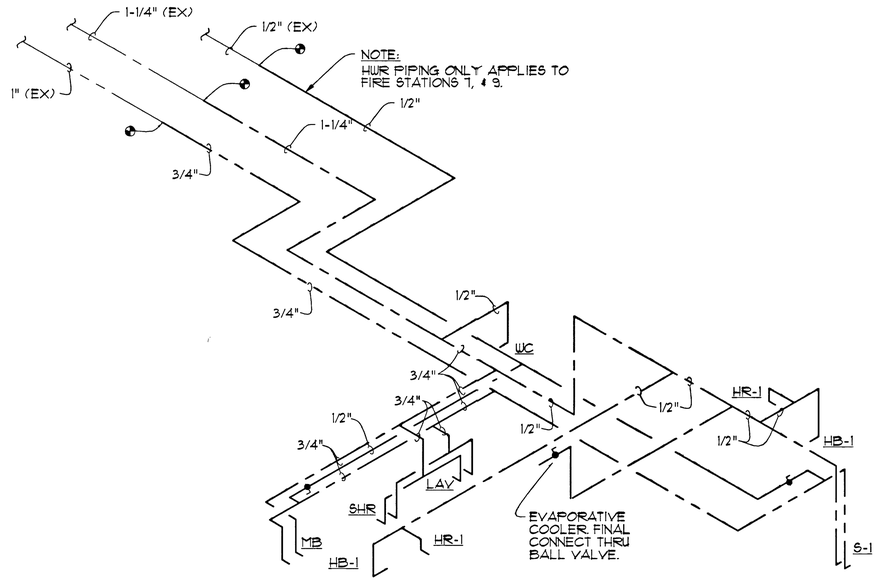

WATER ISOMETRIC- F.S. #2, 7, & 9

NO SCALE

3 / PD.2

RECORD DRAWINGS

AS BUILT INFORMATION WAS PROVIDED BY THE CONTRACTOR. WESTAR ARCHITECTURAL ASSUMES NO LIABILITY FOR ACCURACY OF ITS CONTENTS.

08/07/03

W ☆ E ☆ S ☆ T ☆ A ☆ R
ARCHITECTURAL GROUP, / NEVADA INC.
LAS VEGAS * PHOENIX
ARCHITECTURE * PLANNING * PROJECT MANAGEMENT
3900 MEADOWS LANE SUITE 220 LAS VEGAS, NEVADA 89107
TELEPHONE: (702) 878-0000 FAX: (702) 878-8430
WESTAR

A FACILITY IMPROVEMENT FOR:
FIRE STATION 2,7, & 9
LAS VEGAS, NEVADA

NUMBER	REVISION DESCRIPTION	DATE

PROJECT NUMBER	DRAWN BY	CHECKED BY	ISSUE DATE	SCALE
01803	G.J.E.	KSD	08-13-01	NONE

SHEET NUMBER 630.99

PD.2

61

58598

#01-082