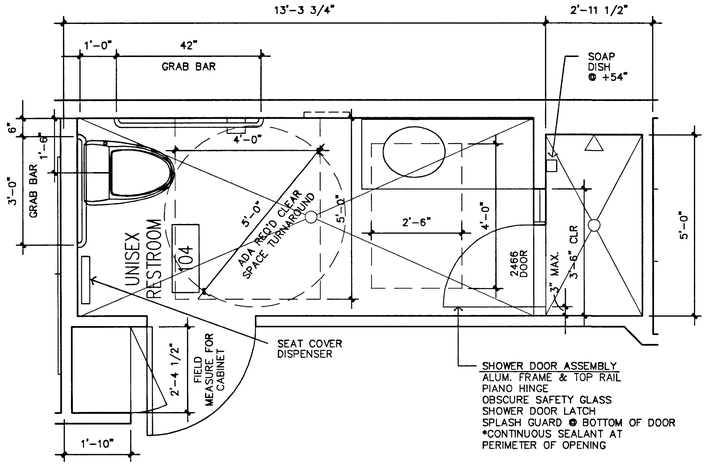

1 ENLARGED RESTROOM
SCALE : 1/2"=1'-0"

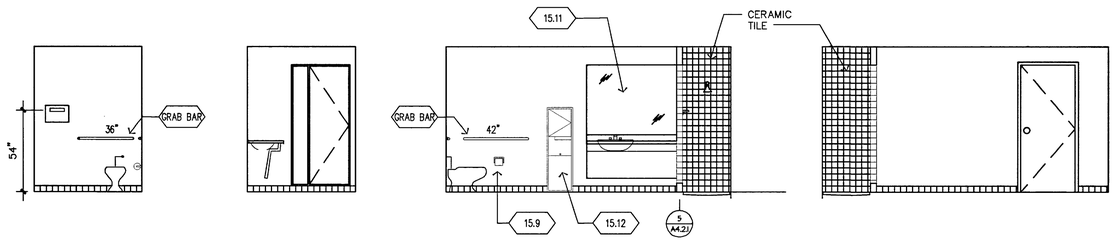

2 UNISEX TOILET ELEVATIONS
SCALE: 1/4"=1'-0"

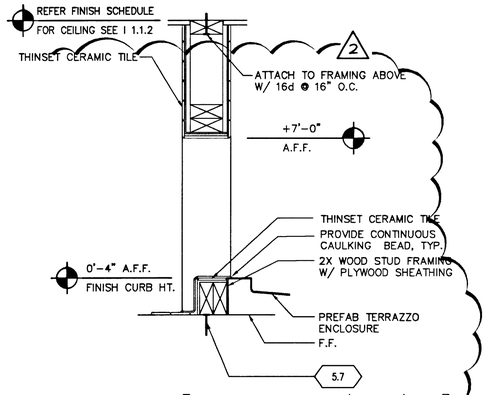

5 SECTION [Revised 3/29/02]
SCALE : 1 1/2"=1'-0"

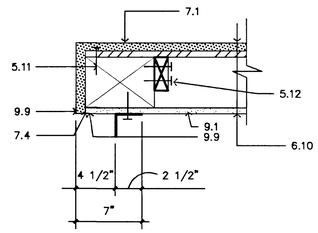

6 6x8 COLUMN – STATION 2
SCALE : 1 1/2"=1'-0"

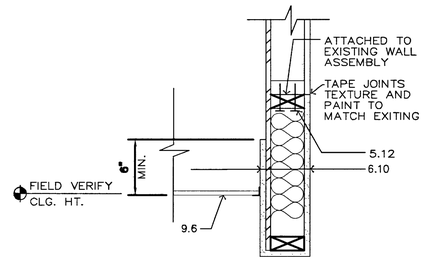

7 SECTION
SCALE : 1"=1'-0"

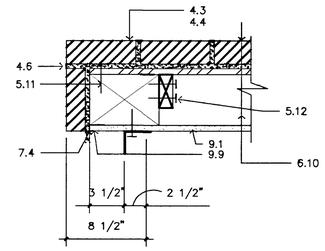

8 6x8 COLUMN – STATION 7 & 9
SCALE : 1 1/2"=1'-0"

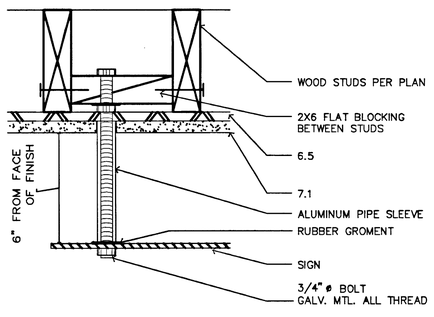

9 SECTION
SCALE : 3"=1'-0"

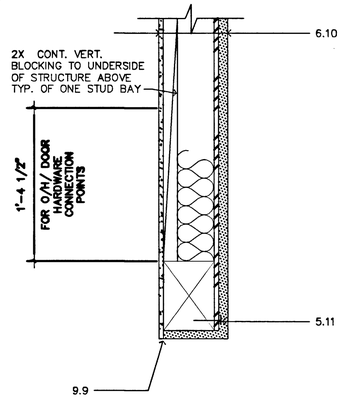

10 HEADER – STATION 2
SCALE : 1 1/2"=1'-0"

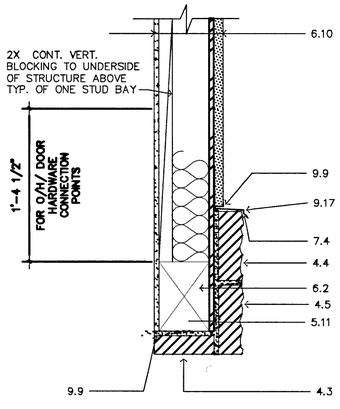

11 HEADER – STATION 7 & 9
SCALE : 1 1/2"=1'-0"

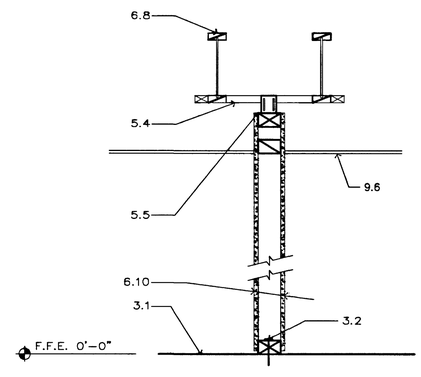

12 SECTION TYP. INTERIOR WALL
SCALE : 1"=1'-0"

RECORD DRAWINGS

AS BUILT INFORMATION WAS PROVIDED BY THE CONTRACTOR. WESTAR ARCHITECTURAL ASSUMES NO LIABILITY FOR ACCURACY OF ITS CONTENTS.

KEYNOTES:

2. SITE
2.1 GRANULAR CUSHION
2.2 CONCRETE APRON
2.3 FLAG POLE LIGHT SENSOR & ELEC. UNDERGROUND CONDUIT OUTLET (F.S. #2 ONLY)
2.4 6" DIA. CONCRETE FILLED STEEL PIPE BOLLARD

3. CONCRETE
3.1 CONCRETE SLAB – REFER TO STRUCTURAL
3.2 FASTEN TO CONCRETE WITH SHOT PINS @ 24" o.c.
3.3 EXISTING CONCRETE SLAB
3.4 PROVIDE LEVEL LANDING AT DOOR, STATION #2 & #7, SEE CIVIL DWGS.

4. MASONRY
4.1 4" SPLIT FACE CMU VENEER – RUNNING BOND
4.2 EXISTING CMU
4.3 SMOOTH FACED CMU VENEER
4.4 SPLIT FACED CMU VENEER
4.5 SPLIT FACED– SINGLE SCORED CMU VENEER
4.6 THINSET MORTAR BED

5. METALS
5.1 STEEL LADDER ASSEMBLY
5.2 J-MOLD
5.3 GLI HANGER AT EACH END.
5.4 SIMPSON Z – CLIPS TO TRUSS CHORDS – 2 X FLAT BLOCKING @ 24" o.c.
5.5 SIMPSON STC CLIP TO BLOCKING
5.6 FASTEN WITH SELF TAPPING SCREWS
5.7 FASTEN WITH SHOT PINS @ 24" o.c.
5.8 TERMINATION BAR FASTENER
5.9 FASTENER & PLATE @ 12" o.c.
5.10 EVAP. COOLER SCREEN ON STATION #7 ONLY
5.11 PLYWOOD EDGE NAIL
5.12 NAILING PER STRUCTURAL
5.13 DROP ROD BRACKET BY MANUFACTURER, TYPICAL OF 3
5.14 5/8"x8" SCREW HOOK, TYPICAL OF THREE
5.15 3"x3"x1/4" METAL ANGLE, FILED CUT AS NECESSARY. SEE A3.2.2 FOR LOCATION.
5.16 EXPANDED METAL FENCE, FILED CUT AS REQUIRED.
5.17 SELF LATCHING, ELECTROPLATED ZINC.
5.18 1/8"x2" GALVANIZED SCREWS.
5.19 1/2"x3" GALVANIZED NUT AND BOLTS, TYPICAL OF 6 ON EACH FENCE.
5.20 2"x2"x1/4" METAL ANGLE WELDED TO FRAME.
5.21 2"x8"x1/4" METAL ANGLE, FASTEN TO WALL.
5.22 3/4"x8" GALVANIZED SCREW, TYPICAL OF 36.
5.23 2"x2"x1 1/8"x1/8 THK. CURE WELDED TO FRAME FOR LATCH.

6. WOOD AND PLASTICS
6.1 2x6 WOOD STUDS @ 16" o.c.
6.2 HEADER – REFER TO STRUCTURAL
6.3 SHIM
6.4 2x6 SILL PLATE
6.5 PLYWOOD SHEATHING – REFER TO STRUCTURAL
6.6 2x4 WOOD STUDS @ 16" o.c.
6.7 CUSTOM CABINETS
6.8 I – JOIST REFER TO STRUCTURAL
6.9 PLYWOOD DECK – REFER TO STRUCTURAL
6.10 WALL PARTITION – REFER TO SHEET A5.1
6.11 EXISTING FRAMING
6.12 2 X BLOCKING @ 48" o.c.
6.13 REFER TO STRUCTURAL
6.14 DOUBLE 2X TOP PLATE
6.15 2 X BLOCKING CONT.
6.16 REMOVE EXISTING WINDOW & FINISH EXISING OPENING
6.17 1X2 WOOD STUCCO STOP
6.18 (2) SHELVES, 16" DEEP
6.19 BUILT-IN CABINET
6.20 MECHANICAL UL UNIT SCREENWIRE ASSEMBLY, STATION #7 ONLY.
6.21 GYPSUM BOARD ON 2x6 WOOD JOIST @ 24" O.C.
6.22 2x BLOCKING AT 24" O.C. .
6.23 PROVIDE NCS STIFFENERS @ BLOCKING.
6.24 2x FURRING

7 THERMAL AND MOISTURE PROTECTION
7.1 3 COAT STUCCO ON METAL LATH OVER WATERPROOF BUILDING FELT
7.2 CAP FLASHING – PAINT PER EXTERIOR COLOR LEGEND
7.3 BATT INSULATION
7.4 SEALANT – REFER SPECS
7.5 SEALANT AND BACKER ROD – REFER SPECS
7.6 SIL FLASHING
7.7 SINGLE PLY ROOFING MEMBRANE
7.8 RIGID INSULATION CRICKET
7.9 WALKWAY PADS – 30" x 30"
7.10 RIGID INSULATION – MIN. 4" THICK
7.11 FLASHING SCREWS
7.12 1/2" COMPRESSIVE FILL
7.13 WATER CUTOFF MASTIC
7.14 BONDING ADHESIVE
7.15 REINFORCED MEMBRANE
7.16 HOT AIR WELD
7.17 CONTINUOUS COUNTER FLASHING
7.18 FRY – REGLET
7.19 REMOVE EXISTING STUCCO TO STUDS OR SHEAR WALLS TO TOP OF NEW ROOF DECK
7.20 5/8" MOISTURE RESISTANT GYP. BD., FULL HEIGHT
7.21 5/8" MOISTURE RESISTANT GYP. BD., UP TO 4'-0"

8. DOORS AND WINDOWS
8.1 OVERHEAD DOOR
8.2 ALUMINUM STOREFRONT
8.3 1" INSULATED GLASS
8.4 HOLLOW METAL DOOR AND FRAME
8.5 GARAGE DOOR OPENER ASSEMBLY
8.6 EXISTING FRAME TO REMAIN
8.7 REFER WINDOW SCHEDULE
8.8 REFER DOOR SCHEDULE
8.9 NOT USED
8.10 NOT USED
8.11 NOT USED
8.12 NOT USED
8.13 PROVIDE DOOR WITH CLASSROOM LOCKSET
8.14 REMOVE EXISTING FIXED WINDOW ASSEMBLY AND PATCH OPENING AND FINISH TO MATCH ADJACENT WALL FINISH

9. FINISHES
9.1 5/8" GYPSUM BOARD
9.2 BASE PER FINISH SCHEDULE
9.3 SUSPENDED ACOUSTICAL CEILING
9.4 NOT USED
9.5 EXISTING CEILING
9.6 REFER FINISH SCHEDULE A-5.1
9.7 METAL CORNER BEAD
9.8 TAPE, BED & TEXTURE
9.9 METAL EDGE BEAD
9.10 APPLY WITH ADHESIVE
9.11 HEAVY DUTY COAT HOOKS (4) @ 72" A.F.F.
9.12 3 STAINLESS STEEL OPEN WIRE WALL SHELVES
9.13 WALL HUNG COUNTER WITH FRONT SKIRT
9.14 60" x 36" BULLETIN BOARD WITH ANODIZED ALUMINUM FRAME
9.15 4 – 8" X 4'-0" HIGH X 6" DEEP (LAMINATE OVER 3/4" MDF) OPEN WALL RACKS FOR SMALL EMS SUPPLIES
9.16 G.I. REVEAL
9.17 G.I. DRIP EDGE FLASHING
9.18 EXISTING PLYWOOD
9.19 G.I. CONTROL JOINT
9.20 CONTINUOUS G.I. WEEP SCREED, TYP.
9.21 PROVIDE WHITE BLOCK LETTERING STYLE, TO MATCH EXISTING

10. SPECIALTIES
10.1 BUILT-IN LOCKER CABINETS
10.2 SINGLE "WHITE" COAT HOOK
10.3 WHITE LETTERING TO MATCH EXISTING
10.4 WALL TO WALL HEAVY DUTY CHROME 1" DIAMETER CURTAIN ROD BY CONTRACTOR

11. EQUIPMENT
11.1 INSIDE MOUNTED DUETTE BLINDS – CONTRACTOR FURNISH & INSTALL – AS SELECTED BY FIRE DEPT.
11.2 BULLETIN BOARD
11.3 METAL LOCKERS – CONTRACTOR FURN. & INSTALL (5) 24"x22"x72" ON 4" WOOD CURB. BY BLUE RIBBON INDUSTRIES (220-4661) COLOR HEATHER.
11.4 WHITE BOARD 24" X 36"

12. FURNISHINGS (NIC)
12.1 DESK (NIC)
12.2 WALL MOUNTED T.V. RACK (NIC) PROVIDE WALL BLOCKING
12.3 HEAD BOARD (NIC)
12.4 NIGHT STAND (NIC)
12.5 BED (NIC)

15. MECHANICAL – REFER TO MECHANICAL PLANS
15.1 ROOF DRAIN
15.2 OVERFLOW DRAIN
15.3 ROOF TOP UNIT
15.4 VENIGLE EXHAUST SYSTEM
15.5 FLOOR SINK
15.6 TRENCH DRAIN
15.7 MOP SINK
15.8 HOSE BIB WITH PORTABLE HOSE REEL (ONE LOCATION ONLY)
15.9 TOILET PAPER DISPENSER
15.10 FLOOR DRAIN
15.11 MIRROR
15.12 TRASH/TOWEL DISPENSER RECESSED
15.13 FIRE EXTINGUISHER Sb 3-A: 40-B: C WALL HUNG
15.14 ROOF DRAINS – REROUTE @ F3 & ONLY
15.15 RELOCATE FIRE SPRINKLER TEST VALVE & SPLASH BLOCK (F.S. #7 & #9)
15.16 UNIT HEATER – REF. MECH
15.17 AIR HOSE REEL – REF. MECH
15.18 EVAPORATIVE COOLER – REF. MECH
15.19 O.H. DOOR MOTOR – REF. MECH
15.20 TYPE "B" VENT – REF. MECH
15.21 DIESEL EXHAUST SYSTEM FAN/VENT
15.22 EXHAUST FAN
15.23 VENT THRU ROOF

16. ELECTRICAL
16.1 PROVIDE ELECTRIC LATCH
16.2 EXISTING SIGN TO REMAIN – TYPICAL OF STATION 7 & 9
16.3 NEW STATION SIGN PER LOCATION (STATION 2, 7 & 9)
16.4 PROVIDE J-BOX @ 48" CONNECTED TO J-BOX ABOVE CEILING OF DISPATCH FOR FUTURE CARD READER.

08/07/03

SEAL

W☆E☆S☆T☆A☆R
ARCHITECTURAL GROUP, / NEVADA INC.
LAS VEGAS * PHOENIX
ARCHITECTURE * PLANNING * PROJECT MANAGEMENT
3900 MEADOWS LANE SUITE 220 LAS VEGAS, NEVADA 89107
TELEPHONE: (702) 878-0000 FAX: (702) 878-8430
WESTAR

A FACILITY IMPROVEMENT FOR:
FIRE STATION 2,7, & 9
LAS VEGAS, NEVADA

NUMBER	REVISION DESCRIPTION	DATE
1	*	
2	AS BUILTS CORRECTIONS	03.17.03
3	AS BUILTS CORRECTIONS	07.17.03
4	*	
5	*	
6	*	
7	*	

PROJECT NUMBER	01933
DRAWN BY	SAW
CHECKED BY	GJ
ISSUE DATE	AUGUST 31, 2001
SCALE	1/4"=1'-0"
SHEET NUMBER	A-4.2.1

630.99
34

This document, including the ideas and designs it contains, is an instrument of professional services rendered by the Architect / Engineer. This document may not be used or copied in whole, or in part, for any purpose other than this specific project without the expressed written consent of Westar Architectural Group, Inc.

V:\2001_pres\201015\01933\as builts\A4-2-1.dwg
Jul 29, 2003 - 7:36am

58571