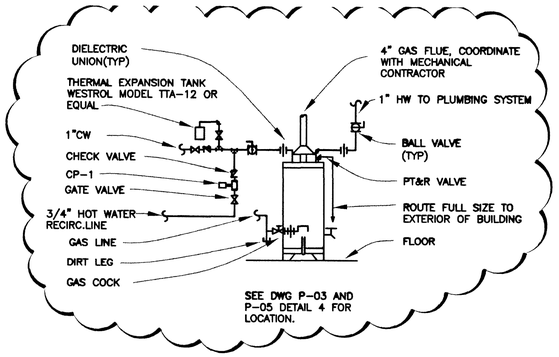

7 / P-04 WATER HEATER DETAIL

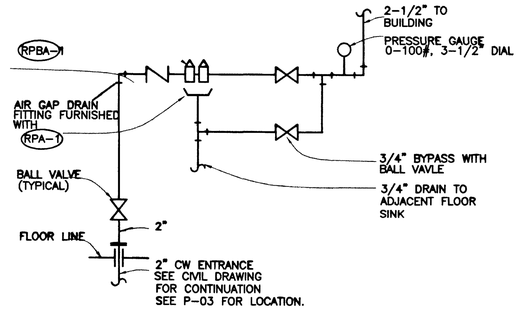

4 / P-04 CW ENTRANCE DETAIL

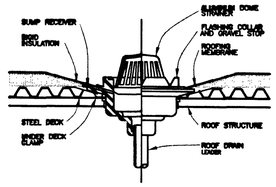

3 / P-04 ROOF DRAIN DETAIL

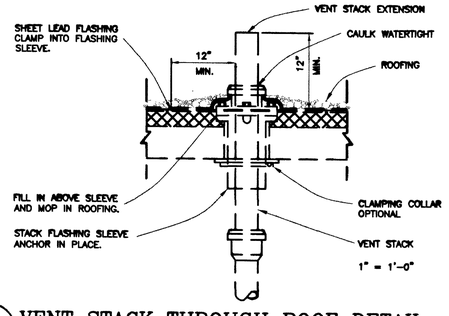

2 / P-04 VENT STACK THROUGH ROOF DETAIL

6 / P-04 NOT USED

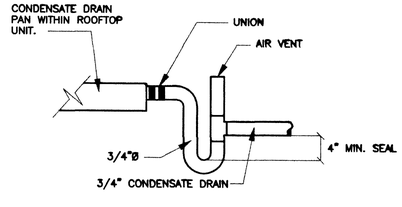

NOTE:
PLUMBING CONTR. SHALL BE RESPONSIBLE FOR COORDINATING ALL CONDENSATE CONNECTIONS TO MECHANICAL EQUIPMENT WITH THE MECHANICAL CONTR.

5 / P-04 CONDENSATE CONNECTION AT ROOFTOP UNITS

NOTE:
COORDINATE FLASHING SYSTEM WITH ROOFING SYSTEM. SEE ARCHITECTURAL PLANS.

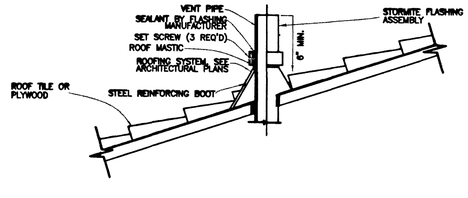

1 / P-04 VENT THROUGH ROOF DETAIL

CITY OF LAS VEGAS, NEVADA

REVISIONS

CONSULTANT

DEC NO. 69824

DEC INC.
2800 So. RANCHO RD.
LAS VEGAS, NEVADA 89102
(702)871-5154

CITY OF LAS VEGAS, NEVADA
FIRE STATION #44

PLUMBING DETAILS

DEPARTMENT OF PUBLIC WORKS
ARCHITECTURAL SERVICES
400 EAST STEWART AVENUE
LAS VEGAS, NEVADA 89101
PHONE: (702)229-6233
FAX: (702)382-2232
TDD: (702)386-9108

MECHANICAL ENGINEER
DEC INC.

DRAWN: JJB
REVIEW:
DATE: 7/15/01 6/11/03
SCALE: AS NOTED
PROJECT: 630.97
SHT NO: 86 OF 106
P-04

DRAWINGS AS INSTRUMENTS OF SERVICE ARE THE PROPERTY OF THE DESIGN PROFESSIONAL WHOSE SEAL OF CERTIFICATION APPEARS ON THE DRAWINGS AND SPECIFICATIONS REQUIRED BY THE CLIENT MAY BE UTILIZED ONLY FOR OCCUPYING THE PROJECT FOR WHICH THEY WERE PREPARED AND NOT FOR THE CONSTRUCTION OF ANY OTHER PROJECT. A.I.A. E202.780
PROHIBITED COPIES OF THE DRAWINGS AND SPECIFICATIONS REQUIRED BY THE CLIENT MAY BE UTILIZED ONLY FOR OCCUPYING THE PROJECT FOR WHICH THEY WERE PREPARED AND NOT FOR THE CONSTRUCTION OF ANY OTHER PROJECT. STRICTLY PROHIBITED COPIES OF THE DRAWINGS AND SPECIFICATIONS AS A WHOLE OR IN PART WITHOUT WRITTEN CONSENT IS STRICTLY PROHIBITED. A.I.A. E202.780

Q:\Projects\2000\0000241 FIRE STATION #44\MECHP-04.dwg, 08/14/2003 04:02:52 PM, Administrator

5308