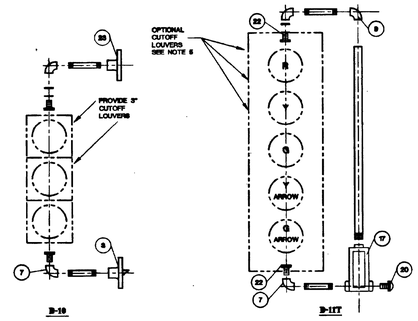

NOTES:

1. ALL SIGNALS ARE 12" NOMINAL (GLASS).
2. FOR ITEMIZED PARTS SEE DRAWING 404.1005.
3. FOR ARROW LENS SEE DRAWING 404.1410.
4. SEE PLANS FOR BACKPLATE REQUIREMENTS.
5. OPTIONAL 3" CUTOFF LOUVERS ON RED, YELLOW AND GREEN BALL INDICATIONS ON 5-SECTION HEADS MAY BE PROVIDED AS DIRECTED BY THE TRAFFIC ENGINEER.

SPECIFICATION REFERENCE	UNIFORM STANDARD DRAWINGS CLARK COUNTY AREA
	SIGNAL ASSEMBLIES B-10, B-11T
	DATE 5-12-94 DWG. NO. 404.1027 SHEET 1 OF 1

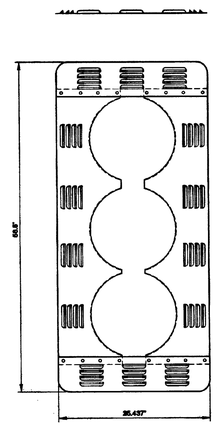

PAINT: FLAT BLACK

SHOWN 3 SECTION, 12" SIGNAL HEAD WITH ELEVATOR PLUMBIZER

SPECIFICATION REFERENCE	UNIFORM STANDARD DRAWINGS CLARK COUNTY AREA
	LOUVERED BACKPLATE FOR MAST ARM MOUNTED SIGNAL
	DATE DWG. NO. 404.900 SHEET 1 OF 1

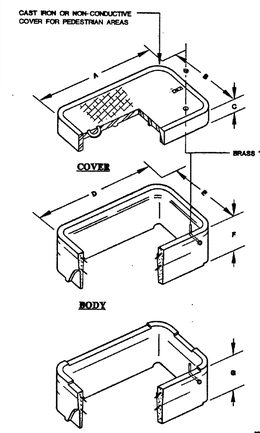

PULL BOX	SIZE (COMMERCIAL DESIGNATION)		
	3-1/2	5	7
A	15	21-3/4	30-5/8
B	10	11-3/4	17-5/8
C	3/4	2	2
D	16-3/8	25	34-3/4
E	14-3/8	15	21-3/4
F	12	12	12
G	N/A	10-1/4	11-1/2

NOMINAL DIMENSION IN INCHES

NOTES:

1. COVERS INSTALLED IN TRAFFIC AND OPEN AREAS ACCESSIBLE TO TRAFFIC SHALL BE PER STANDARD DRAWING NO. 327.
2. SEE STANDARD DRAWING NO. 323 FOR COVER GROUNDING.

SPECIFICATION REFERENCE		UNIFORM STANDARD DRAWINGS CLARK COUNTY AREA
503	PRECAST PRESTRESSED CONCRETE MEMBERS	PRECAST REINFORCED CONCRETE PULL BOX
623	TRAFFIC SIGNALS & STREETLIGHTING	
		DATE 12-12-96 DWG. NO. 326 PAGE NO. 86

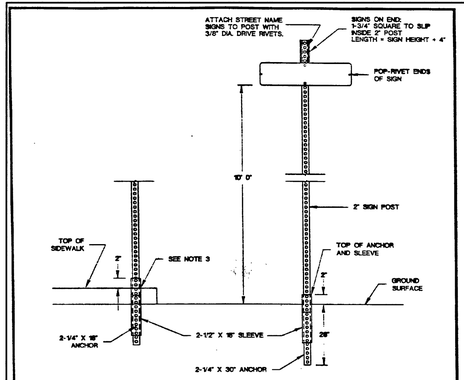

NOTES:

1. ALL COMPONENTS SHALL BE SQUARE POST, PERFORATED ON ALL FOUR SIDES.
2. ATTACH ANCHOR AND SLEEVE TOGETHER PRIOR TO DRIVING INTO GROUND. LEAVE AT LEAST ONE HOLE, BUT NO MORE THAN TWO, ABOVE GROUND OR ABOVE SIDEWALK.
3. FOR SIDEWALK INSTALLATION, DRILL SIDEWALK WITH A 3" HOLE, THE CENTER TO BE 8" FROM BACK OF SIDEWALK.
4. ATTACH POST TO ANCHORING SYSTEM BY USING AT LEAST TWO 3/8" DIA. DRIVE RIVETS.
5. PROVIDE 4" MINIMUM LAP BETWEEN POST AND THE ANCHOR/SLEEVE ASSEMBLY.

SPECIFICATION REFERENCE		UNIFORM STANDARD DRAWINGS CLARK COUNTY AREA
631	STREET NAME SIGNS	STANDARD STREET NAME SIGN POST INSTALLATION
		DATE 6-12-97 DWG. NO. 249 PAGE NO. 55

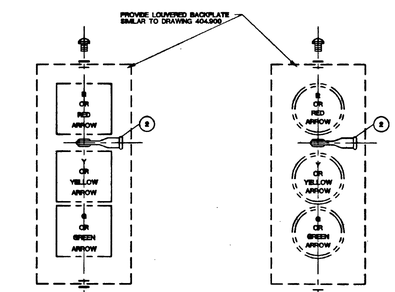

NOTES:

1. SEE STANDARD SPECIFICATIONS FOR PROGRAMMED VISIBILITY HEAD.
2. ALL M-2 INDICATIONS ARE 12" NOMINAL (GLASS).
3. SEE DRAWING NO. 404.1005 FOR ITEMIZED PARTS.
4. SEE SIGNAL PLANS FOR BALL OR ARROW INDICATIONS.

SPECIFICATION REFERENCE	UNIFORM STANDARD DRAWINGS CLARK COUNTY AREA
	MAST ARM SIGNAL ASSEMBLIES M-3, M-2
	DATE 2-11-93 DWG. NO. 404.1023 SHEET 1 OF 1

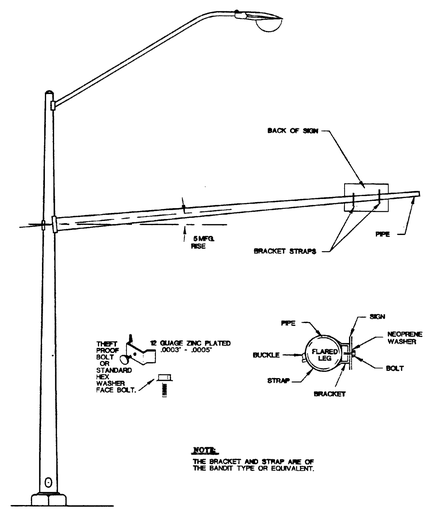

NOTE:

THE BRACKET AND STRAP ARE OF THE BANDIT TYPE OR EQUIVALENT.

SPECIFICATION REFERENCE	UNIFORM STANDARD DRAWINGS CLARK COUNTY AREA
	SIGN MOUNTING ILLUSTRATION
	DATE 4-9-98 DWG. NO. 404.418 SHEET 1 OF 1

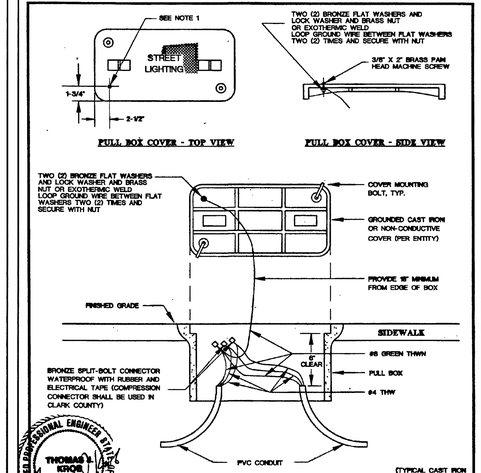

REGISTERED PROFESSIONAL ENGINEER — THOMAS J. KIRCHER — ELECTRICAL — NEVADA No. 8287 — 4-2-97

NOTES:

1. PULL BOX LID SHOULD BE TAPPED WITH A 3/8" X 16 COURSE THREAD TAP.
2. FOR TYPICAL NO. 7 PULL BOX COVER GROUNDING, SEE STANDARD DRAWING NO. 327.

SPECIFICATION REFERENCE		UNIFORM STANDARD DRAWINGS CLARK COUNTY AREA
623	TRAFFIC SIGNALS & STREETLIGHTING	PULL BOX COVER BONDING DETAIL
		DATE 12-12-96 DWG. NO. 323 PAGE NO. 83

RECORD DRAWINGS
AS-BUILT INFORMATION WAS PROVIDED BY THE CONTRACTOR. AZTEC ASSUMES NO LIABILITY FOR ACCURACY OF ITS CONTENTS.

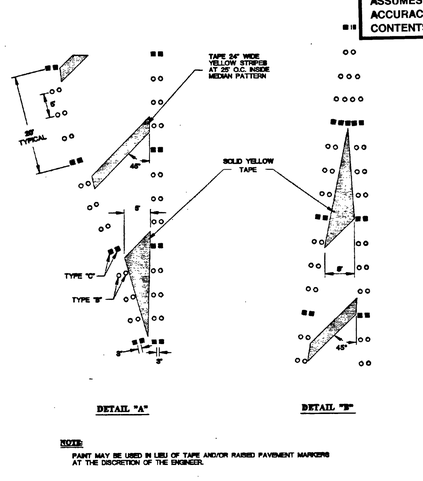

NOTE:

PAINT MAY BE USED IN LIEU OF TAPE AND/OR RAISED PAVEMENT MARKERS AT THE DISCRETION OF THE ENGINEER.

SPECIFICATION REFERENCE		UNIFORM STANDARD DRAWINGS CLARK COUNTY AREA
628	PAINTING TRAFFIC STRIPING	DETAILS FOR TYPICAL LANE DELINEATION IN TRANSITION SECTIONS
633	PAVEMENT MARKERS	
		DATE 6-11-93 DWG. NO. 245 (2 OF 3) PAGE NO. 51A

REV.	DESCRIPTION	BY	DATE	ASN. APP.	DATE
	04-22-03 AS-BUILT DRAWINGS				

PROJ NO: AZ01002
DESIGN: RAC/LG
DATE: 04/22/03
SCALE: AS SHOWN
FILE: FS44_15

REGISTERED PROFESSIONAL ENGINEER — STATE OF NEVADA — ALLEN G. PAPENKA — No. 9029 — CIVIL

STAMP DATE: 4-22-03

AZTEC ENGINEERING
3320 N Buffalo Dr. # 106, Las Vegas, NV 89129
Tel: (702) 396-3426 Fax:(702) 396-3758
Email: aztec@azteceng.com

CITY OF LAS VEGAS
FIRE STATION NO. 44

CONSTRUCTION DETAILS V

SHEET
C-15
15 OF 20 SHEETS

CLV DRAWING NO.
630.97

57240