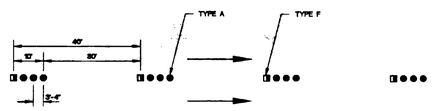

TYPE 4 LANE LINE

(DIVIDED, UNDIVIDED OR ONE-WAY ROADWAY)

SPECIFICATION REFERENCE	
633	PAVEMENT MARKERS

UNIFORM STANDARD DRAWINGS
CLARK COUNTY AREA

TYPICAL LANE LINE DELINEATION

DATE 4-8-99 | DWG. NO. 244A | PAGE NO. 50A

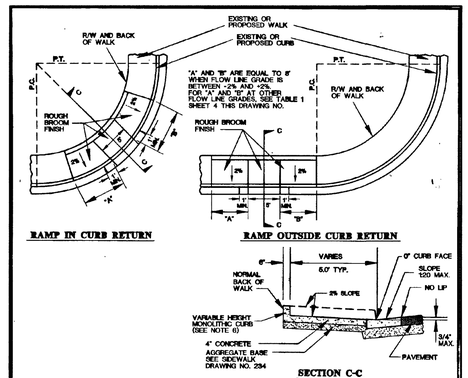

RAMP IN CURB RETURN

RAMP OUTSIDE CURB RETURN

SECTION C-C

PROFILE

NOTES:

1. SIDEWALK RAMP WITHIN CURB RETURN SHALL BE LOCATED AT THE MIDPOINT OF CURB RETURN UNLESS OTHERWISE APPROVED.
2. SIDEWALK RAMPS OUTSIDE OF THE CURB RETURN SHALL BE LOCATED ADJACENT TO THE RETURN UNLESS OTHERWISE APPROVED.
3. RAMPS SHALL BE CONSTRUCTED WITH A ROUGH BROOM FINISH TRANSVERSE TO THE SLOPE OF THE RAMP.
4. WHEN CONSTRUCTING RAMP WHERE CURB & GUTTER EXISTS, COMPLETELY REMOVE INTERFERING PORTIONS OF EXISTING CURB & GUTTER.
5. DETECTABLE WARNING CONSISTS OF RAISED TRUNCATED DOMES WITH A DIAMETER OF NOMINAL 0.9 IN., A HEIGHT OF NOMINAL 0.2 IN. AND A CENTER-TO-CENTER SPACING OF NOMINAL 2.35 IN. AND CONTRASTING VISUALLY WITH ADJOINING SURFACES. MAY BE PLACED ON RAMP EXTENDING THE FULL WIDTH AND DEPTH OF THE RAMP.
6. CURB MAY BE PLACED AND IS PREFERRED BEHIND BACK OF WALK IF SUFFICIENT RIGHT-OF-WAY OR EASEMENTS EXIST AND AS APPROVED BY THE ENGINEER.

SPECIFICATION REFERENCE	
302	AGGREGATE BASE
501	CONCRETE
502	CONCRETE STRUCTURES

UNIFORM STANDARD DRAWINGS
CLARK COUNTY AREA

SIDEWALK RAMP
CASE I

DATE 12-14-00 | DWG. NO. 235 (1 OF 4) | PAGE 41

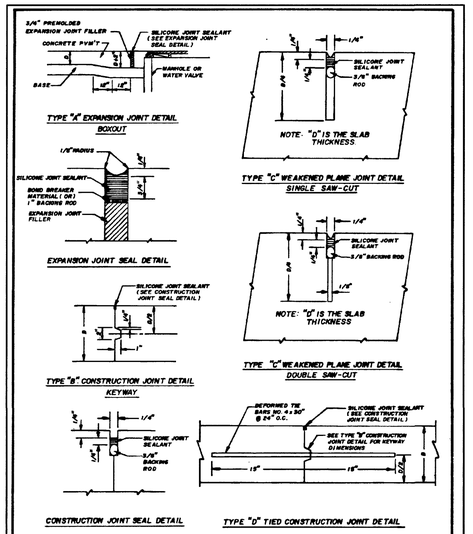

SPECIFICATION REFERENCE	
409	CONCRETE PAVEMENT
707	JOINT MATERIAL
TT-S-00153A CLASS A SEALANT	

UNIFORM STANDARD DRAWINGS
CLARK COUNTY AREA

CONCRETE PAVEMENT
JOINT DETAILS

DATE | DWG NO 233 | PAGE NO. 39

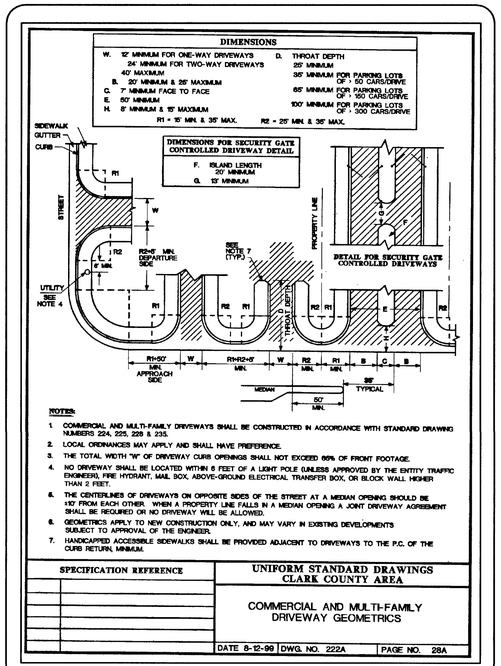

NOTES:

1. COMMERCIAL AND MULTI-FAMILY DRIVEWAYS SHALL BE CONSTRUCTED IN ACCORDANCE WITH STANDARD DRAWING NUMBERS 224, 225, 226 & 235.
2. LOCAL ORDINANCES MAY APPLY AND SHALL HAVE PREFERENCE.
3. THE TOTAL WIDTH "W" OF DRIVEWAY CURB OPENINGS SHALL NOT EXCEED 65% OF FRONT FOOTAGE.
4. NO DRIVEWAY SHALL BE LOCATED WITHIN 5 FEET OF A LIGHT POLE (UNLESS APPROVED BY THE ENTITY TRAFFIC ENGINEER), FIRE HYDRANT, MAIL BOX, ABOVE-GROUND ELECTRICAL TRANSFER BOX, OR BLOCK WALL HIGHER THAN 2 FEET.
5. THE CENTERLINES OF DRIVEWAYS ON OPPOSITE SIDES OF THE STREET AT A MEDIAN OPENING SHOULD BE ±10' FROM EACH OTHER. WHEN A PROPERTY LINE FALLS IN A MEDIAN OPENING A JOINT DRIVEWAY AGREEMENT SHALL BE REQUIRED OR NO DRIVEWAY WILL BE ALLOWED.
6. GEOMETRICS APPLY TO NEW CONSTRUCTION ONLY, AND MAY VARY IN EXISTING DEVELOPMENTS SUBJECT TO APPROVAL OF THE ENGINEER.
7. HANDICAPPED ACCESSIBLE SIDEWALKS SHALL BE PROVIDED ADJACENT TO DRIVEWAYS TO THE P.C. OF THE CURB RETURN, MINIMUM.

SPECIFICATION REFERENCE	

UNIFORM STANDARD DRAWINGS
CLARK COUNTY AREA

COMMERCIAL AND MULTI-FAMILY
DRIVEWAY GEOMETRICS

DATE 8-12-99 | DWG. NO. 222A | PAGE NO. 28A

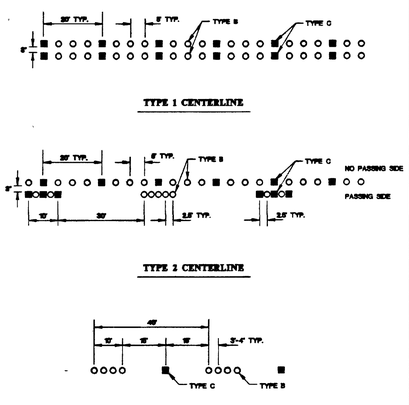

SPECIFICATION REFERENCE	
633	PAVEMENT MARKERS

UNIFORM STANDARD DRAWINGS
CLARK COUNTY AREA

TYPICAL CENTERLINE DELINEATION

DATE 6-11-93 | DWG. NO. 244 | PAGE NO. 50

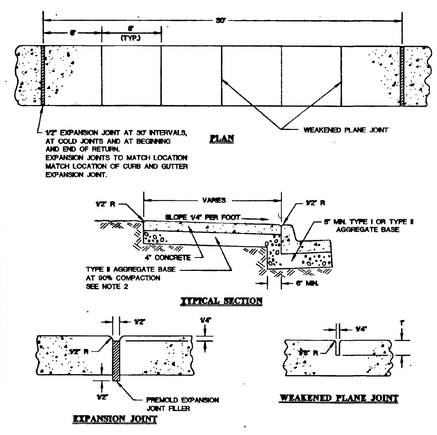

NOTES:

1. ON ALL CURB RETURNS A 1/2" EXPANSION JOINT SHALL BE CONSTRUCTED BETWEEN THE BACK OF CURB AND THE SIDEWALK FOR THE ENTIRE LENGTH OF THE RETURN.
2. THE TYPE II AGGREGATE BASE THICKNESS IS SHOWN ON THE TYPICAL SECTION DRAWINGS 202 - 207.
3. LONGITUDINAL WEAKENED PLANE JOINT REQUIRED AT MIDPOINT OF SIDEWALK 10' OR WIDER.

SPECIFICATION REFERENCE	
302	AGGREGATE BASE
501	CONCRETE
502	CONCRETE STRUCTURES
707	JOINT MATERIAL

UNIFORM STANDARD DRAWINGS
CLARK COUNTY AREA

SIDEWALK

DATE 12-14-00 | DWG. NO. 234 | PAGE NO. 40

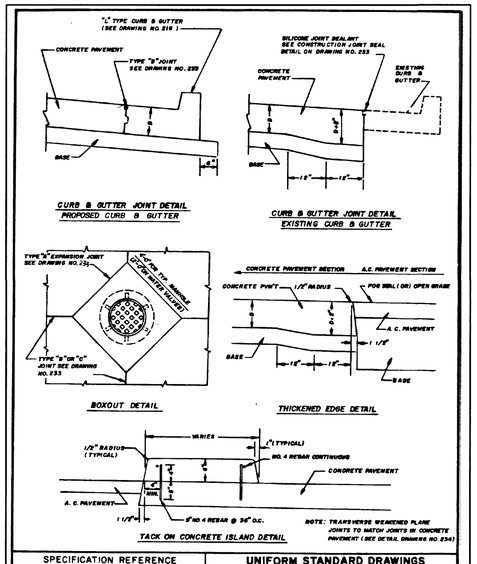

SPECIFICATION REFERENCE	
409	CONCRETE PAVEMENT
501	CONCRETE
505	REINFORCING STEEL
TT-S-00153A CLASS A SEALANT	

UNIFORM STANDARD DRAWINGS
CLARK COUNTY AREA

CONCRETE PAVEMENT
CONSTRUCTION DETAILS

DATE | DWG NO 232 | PAGE NO. 38

RECORD DRAWINGS
AS-BUILT INFORMATION WAS PROVIDED BY THE CONTRACTOR. AZTEC ASSUMES NO LIABILITY FOR ACCURACY OF IT'S CONTENTS.

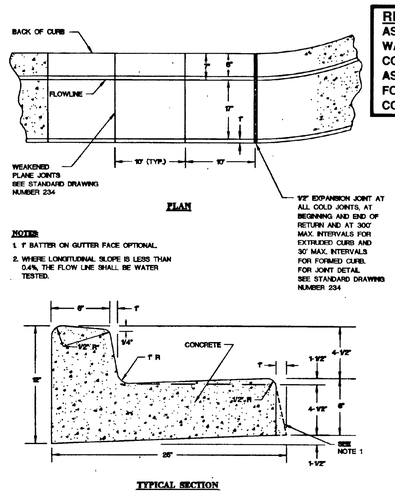

SPECIFICATION REFERENCE	
501	CONCRETE
502	CONCRETE STRUCTURES
707	JOINT MATERIAL

UNIFORM STANDARD DRAWINGS
CLARK COUNTY AREA

"L" TYPE
CURB AND GUTTER

DATE 12-14-00 | DWG. NO. 216 | PAGE NO. 22

REV.	DESCRIPTION	BY	DATE	AGEN. APP.	DATE

04-22-03 AS-BUILT DRAWINGS

PROJ NO: AZ01002
DESIGN: RAC/LG
DATE: 04/22/03
SCALE: AS SHOWN
FILE: FS44_14

PROFESSIONAL ENGINEER - STATE OF NEVADA
ALLEN E. PAVELKA
No. 9029

STAMP DATE: 4-22-03

AZTEC ENGINEERING
3320 N Buffalo Dr. # 106, Las Vegas, NV 89129
Tel (702) 396-3426 Fax(702) 396-3758
Email: aztecengineering.com

CITY OF LAS VEGAS
FIRE STATION NO. 44

CONSTRUCTION DETAILS IV

SHEET
C-14
14 OF 20 SHEETS

CLV DRAWING NO.
630.97

57239

17 OF 106