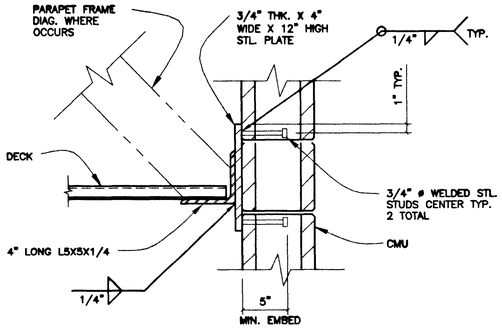

16 SECTION
1 1/2" = 1'-0"

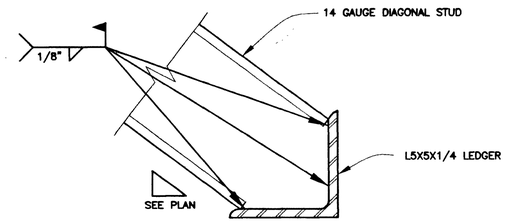

12 DETAIL
3" = 1'-0"

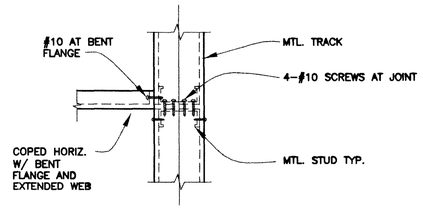

8 SECTION
1 1/2" = 1'-0"

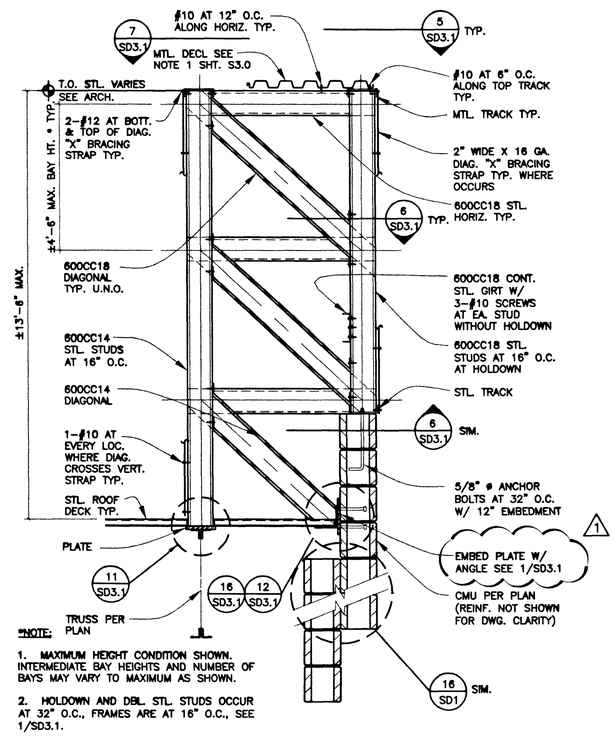

*NOTE:

1. MAXIMUM HEIGHT CONDITION SHOWN. INTERMEDIATE BAY HEIGHTS AND NUMBER OF BAYS MAY VARY TO MAXIMUM AS SHOWN.

2. HOLDOWN AND DBL. STL. STUDS OCCUR AT 32" O.C., FRAMES ARE AT 16" O.C., SEE 1/SD3.1.

3 TYP. STL. STUD FRAME
3/4" = 1'-0"

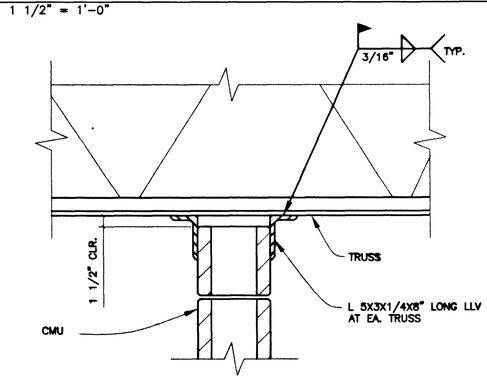

15 SECTION
1 1/2" = 1'-0"

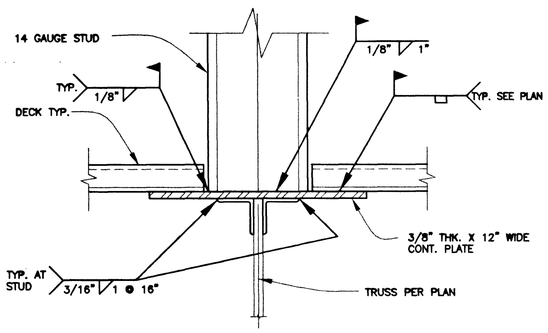

11 DETAIL
3" = 1'-0"

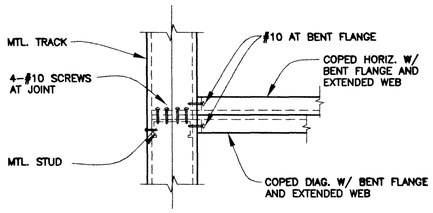

7 SECTION
1 1/2" = 1'-0"

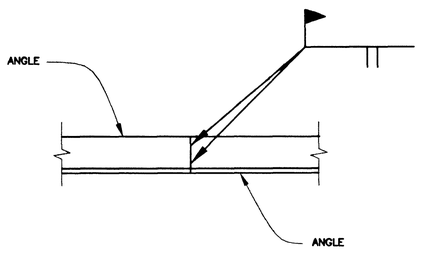

14 DETAIL
1 1/2" = 1'-0"

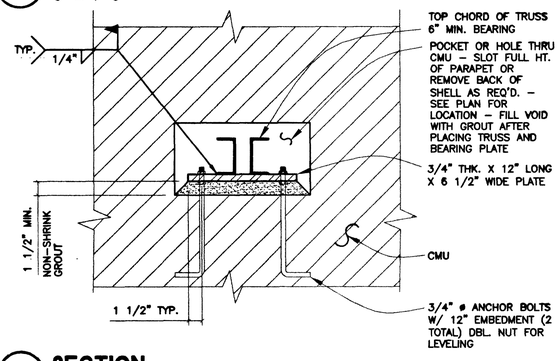

10 SECTION
1 1/2" = 1'-0"

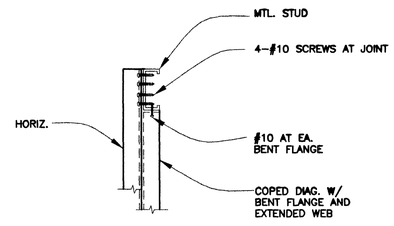

6 SECTION
1 1/2" = 1'-0"

*NOTES:

1. USE 4 TOTAL #10 SCREWS (2-EA. STUD) AT HOLDOWNS LOCATIONS.

2. SEE 3/SD3.1 FOR ADDITIONAL INFORMATION.

1 TYP. STL. STUD FRAME AT HOLDOWN
3/4" = 1'-0"

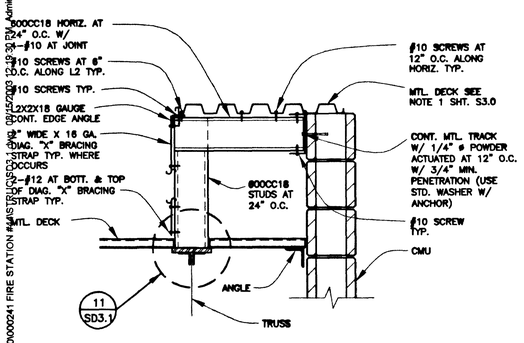

13 SECTION
1" = 1'-0

57294

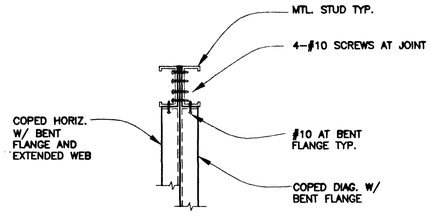

9 SECTION
1 1/2" = 1'-0"

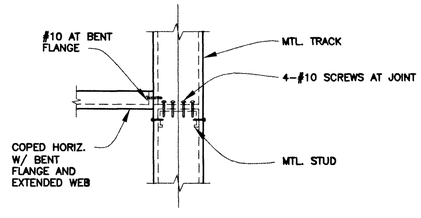

5 SECTION
1 1/2" = 1'-0"

CITY OF LAS VEGAS, NEVADA
FIRE STATION #44
FRAMING DETAILS

REVISIONS
1 9-6-01 BLDG DEPT RESUBMITTAL

CONSULTANT

DEC INC.
2900 So. RANCHO RD.
LAS VEGAS, NEVADA 89102
(702)871-6164

DEPARTMENT OF PUBLIC WORKS
ARCHITECTURAL SERVICES
400 EAST STEWART AVENUE
LAS VEGAS, NEVADA 89101
PHONE: (702) 229-6233
FAX: (702) 382-9252
TDD: (702) 386-9108

DESIGN ENGINEERING CONSULTANTS

DRAWN	JJB
FILE	
DATE	7/13/01 6/11/01
SCALE	AS NOTED
PROJECT	630.97
SHT NO	72 OF 106

SD3.1

COPIES OF THE DRAWINGS AND SPECIFICATIONS RETAINED BY THE CLIENT MAY BE UTILIZED ONLY FOR OCCUPYING THE PROJECT FOR WHICH THEY WERE PREPARED AND NOT FOR THE CONSTRUCTION OF ANY OTHER PROJECT. A.I.C. 523.780

DRAWINGS, AS INSTRUMENTS OF SERVICE, ARE THE PROPERTY OF THE DESIGN PROFESSIONAL. WHERE STAMP OF CERTIFICATION APPEARS ON THE DRAWINGS AND SPECIFICATIONS, ANY USE OR REPRODUCTION IN WHOLE OR IN PART WITHOUT WRITTEN CONSENT IS STRICTLY PROHIBITED.

Q:\Projects\000000241 FIRE STATION #44\STRUCT\SD3.1 09/05/2003 12:49:30 PM Administrator