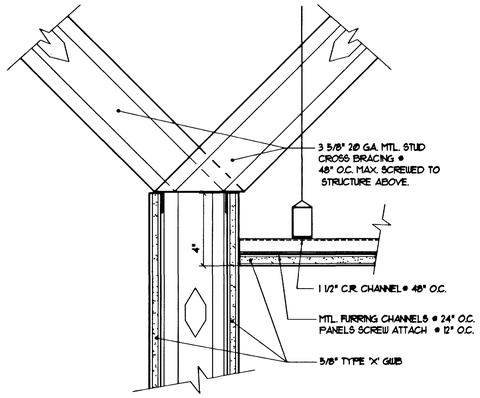


NOTES:
- REFERENCE EXISTING CONDITIONS FOR ELEVATIONS OF GWB CEILING.

## 1 Gyp. Bd. Clg. Transition @ Partition

Scale: 3"=1'-0" 09500-11 A10-5-1

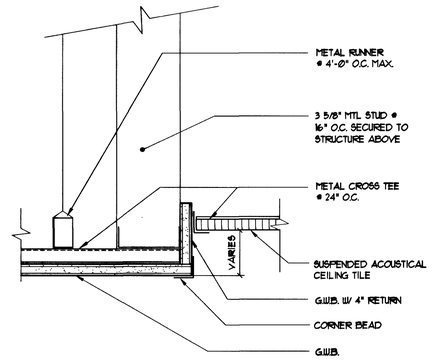


## 2 G.W.B. Ceiling @ A.C.T. Interface

Scale: 3"=1'-0" 09500-06 A10-5-2

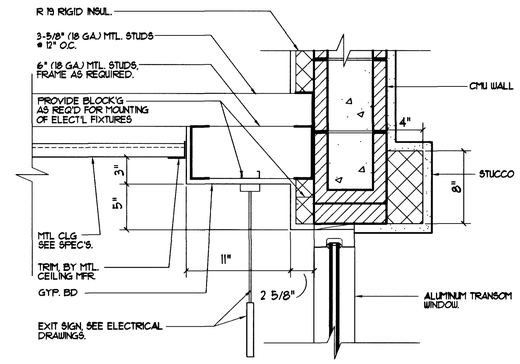


## 3 Ceiling Detail @ Barrel Vault

Scale: 1 1/2"=1'-0" A10-5-3

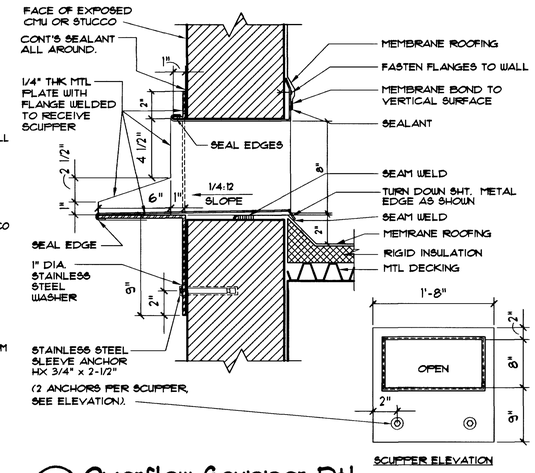


## 4 Overflow Scupper Dtl.

Scale: 1 1/2"=1'-0" xxxx-xx A10-2-4

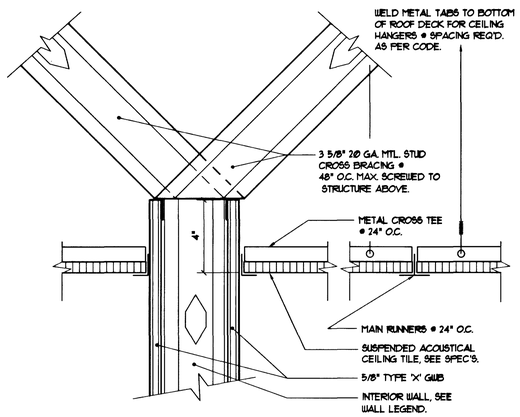


## 5 A.C.T. Interface W/ Partition

Scale: 3"=1'-0" 09500-11 A10-5-5

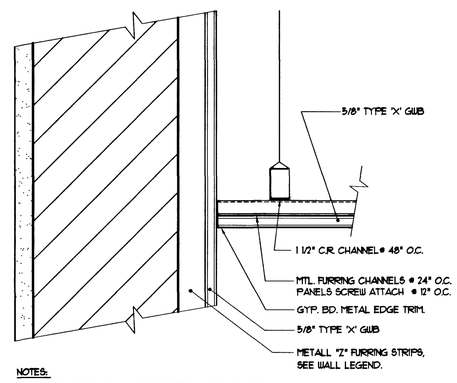


NOTES:
EXTEND GYP. BD. AT WALLS TO BOTTOM OF ROOF DECK.

## 6 Gyp. Bd. Clg. Transition @ CMU Wall

Scale: 3"=1'-0" 09500-14 A10-5-6

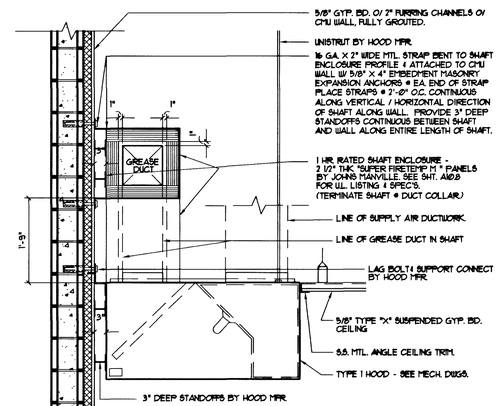


## 7 1 Hr Rated Grease Shaft Detail

Scale: 3/4" = 1'-0" A10-5-7

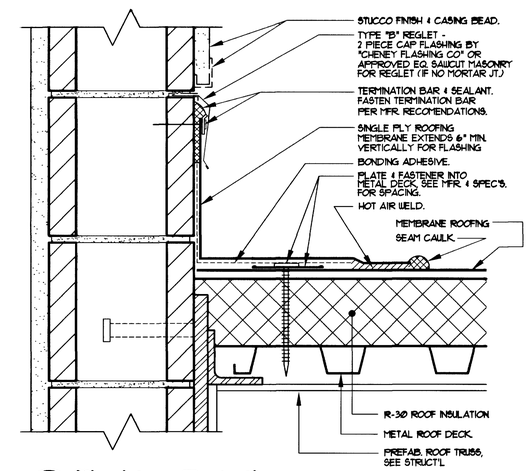


## 8 Flashing Detail

Scale: 3"=1'-0" A10-5-8

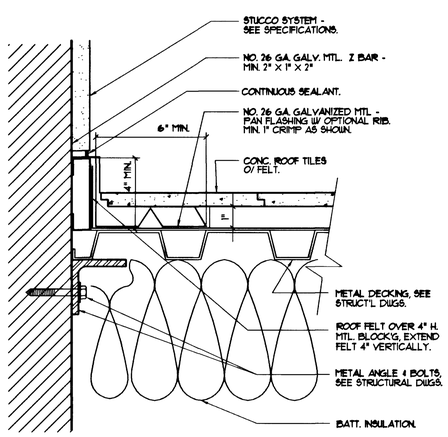


## 9 Roof Flashing @ Sidewall Detail

Scale: 3"=1'-0" 07620-04 A10-5-9

57270

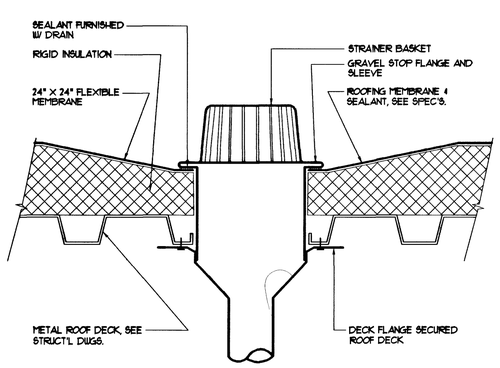


NOTE:
SEE DTL. 4/A10.5 FOR OVERFLOW SCUPPER.

## 10 Roof Drain

Scale: 3"=1'-0" 07110-04 A10-5-10

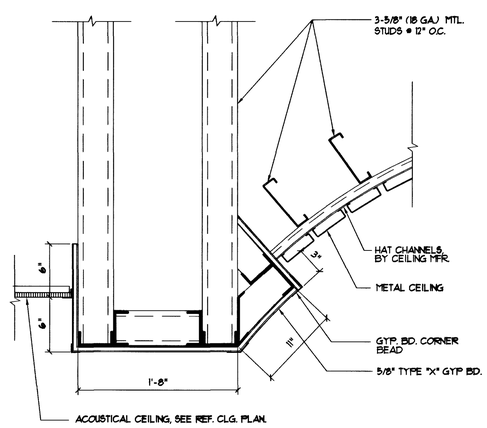


## 11 Mtl Clg @ Edge Condition

Scale: 1 1/2"=1'-0" xxxx-xx A10-5-11

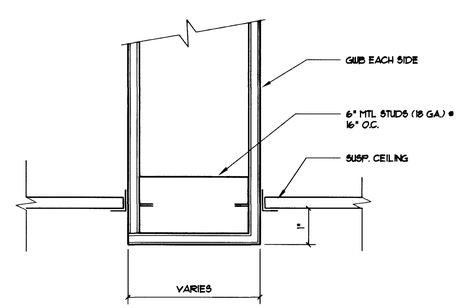


## 12 A.C.T. Ceiling @ Soffit

Scale: 3"=1'-0" 09500-03 A10-5-12

RECORD DRAWING
DEPARTMENT OF PUBLIC WORKS

CITY OF LAS VEGAS, NEVADA
FIRE STATION #44
Details

REVISIONS

CONSULTANT

STAMP

OWNER: CITY OF LAS VEGAS
DEPARTMENT OF PUBLIC WORKS
ARCHITECTURAL SERVICES

400 EAST STEWART AVENUE
LAS VEGAS, NEVADA 89101
PHONE: (702) 229-6535
FAX: (702) 382-3232
TDD: (702) 386-9108

| | |
|---|---|
| DRAWN | EPS |
| FILE | 1x44-A10-5 |
| DATE | 10/29/01 |
| SCALE | As Noted |
| BID NO | 02.15341.02 |
| CLV DWG NO | 630.97 |
| SHT NO | 48 OF 106 |
| | A10.5 |

OWNERSHIP OF INSTRUMENTS OF SERVICE ARE THE PROPERTY OF THE DESIGN PROFESSIONAL WHOSE STAMP OF CERTIFICATION APPEARS ON THE DRAWINGS AND SPECIFICATIONS. ANY USE OR REPRODUCTION IN WHOLE OR IN PART WITHOUT WRITTEN CONSENT IS STRICTLY PROHIBITED. COPIES OF THE DRAWINGS AND SPECIFICATIONS PREPARED BY THE CLIENT MAY BE UTILIZED ONLY FOR OCCUPYING THE PROJECT FOR WHICH THEY WERE PREPARED AND NOT FOR THE CONSTRUCTION OF ANY OTHER PROJECT. N. A. C. 623.330.