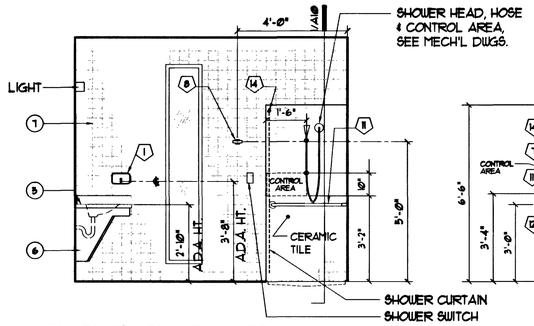


15 RESTROOM 103
Scale: 3/8"=1'-0"

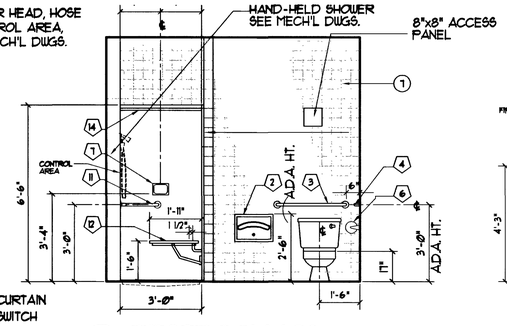


16 RESTROOM 103
Scale: 3/8"=1'-0"

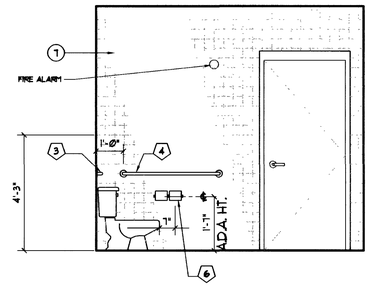


17 RESTROOM 103
Scale: 3/8"=1'-0"

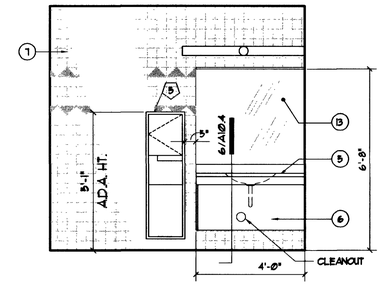


18 RESTROOM 103
Scale: 3/8"=1'-0"

GENERAL NOTE: SEE SHEET A8.1 FOR TOILET ACCESSORY SCHEDULE.

SHOWER DOOR SPECIFICATION:

ALL SHOWER ENCLOSURES (W/ SIDELIGHTS WHERE SHOWN), SHALL BE: ALUMINUM FRAMED SHOWER ENCLOSURE, BY "CENTURY SHOWER DOORS" - (LUCETTE SERIES) MODEL NO. L-1629 SILVER ANODIZED FINISH & CLEAR GLASS OR APPROVED EQ. VERIFY SIZE PRIOR TO FABRICATION.

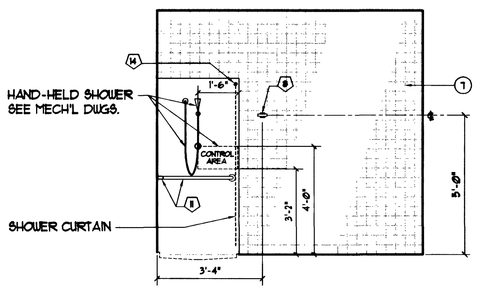


19 RESTROOM 106
Scale: 3/8"=1'-0"

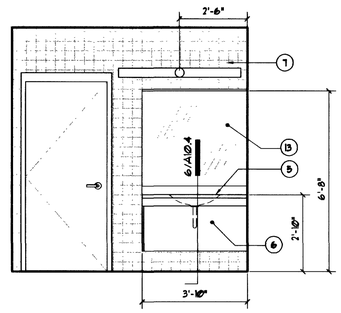


20 RESTROOM 106
Scale: 3/8"=1'-0"

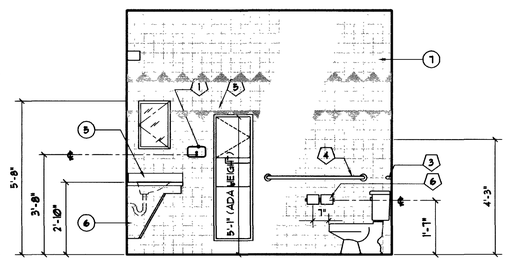


21 RESTROOM 106
Scale: 3/8"=1'-0"

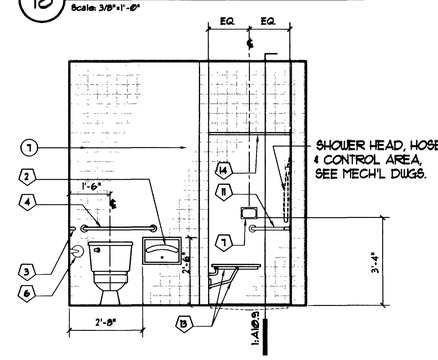


22 RESTROOM 106
Scale: 3/8"=1'-0"

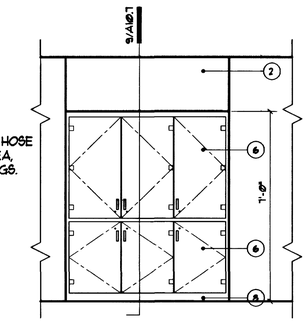


23 RESCUE LINEN
Scale: 3/8"=1'-0"

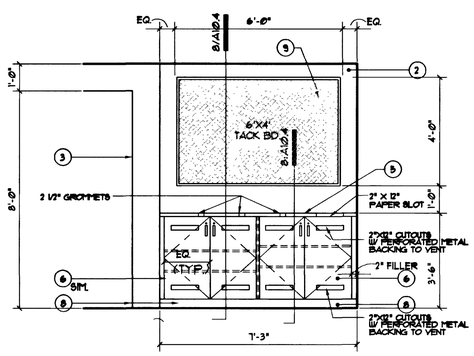


24 ALARM STATION
Scale: 3/8"=1'-0"
(PARTIAL HALL 102)

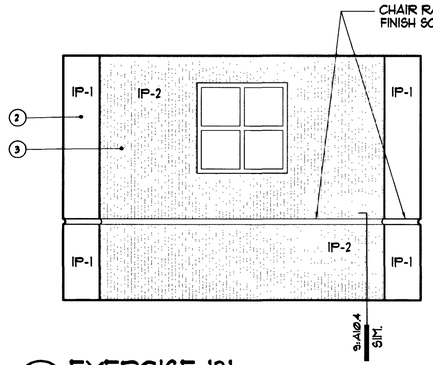


25 EXERCISE 131
Scale: 3/8"=1'-0"

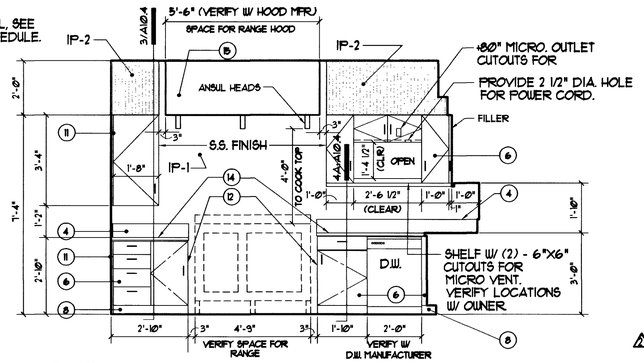


26 KITCHEN 113
Scale: 3/8"=1'-0"

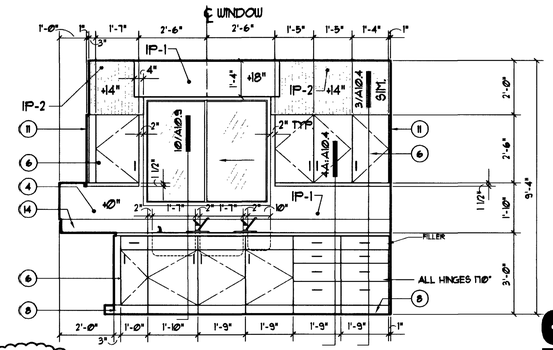


27 KITCHEN 113
Scale: 3/8"=1'-0"

## KEYNOTES

1. CMU WALL, SEE WALL LEGEND ON SHEET G2.
2. GYPSUM BOARD OVER METAL STUD FRAMING
3. GYPSUM BOARD O/ FURRING CHANNELS
4. STAINLESS STEEL BACKSPLASH TO MATCH COUNTERTOP.
5. SILESTONE FINISH COUNTERTOP, SEE ROOM FINISH SCHEDULE.
6. PLASTIC LAMINATE (LAM-1) FINISH UPPER / BASE CABINETS & SIDES.
7. CERAMIC WALL TILE AND COVE BASE
8. RUBBER COVE BASE (RB-1), SEE SHT. A6.
9. TACK BOARD, SEE SPECIFICATIONS
10. MARKER BOARD, SEE SPECIFICATIONS
11. EXTEND CAB. FACE TO ADJACENT SURFACE, SCRIBE TO FIT.
12. FINISH END OF CABINETS W/ STAINLESS STEEL TO MATCH COUNTER, HEM EXPOSED EDGES.
13. MIRROR, POLISH EDGES, ANCHOR W/ ADHESIVE, SEE SPEC'S.
14. SWIRLED STAINLESS STL. FINISH COUNTERTOP.
15. S.STL. RANGE HOOD, SEE MECH. DWGS.
16. S.STL. DISINFECTING SINK AND SHELVES, SEE PLUMBING SCHEDULE.
17. PREMANUFACTURED ALUM/GLASS SHOWER DOOR W/ SIDELIGHT, (SEE SHOWER DOOR SPEC THIS SHEET.)
18. LINEN CABINET, SEE DETAIL 9/A10.7.

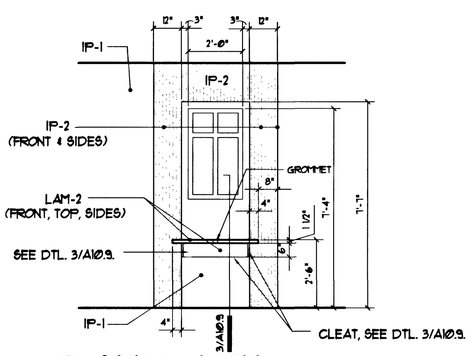


28 STUDY NOOK
Scale: 3/8"=1'-0"
57263

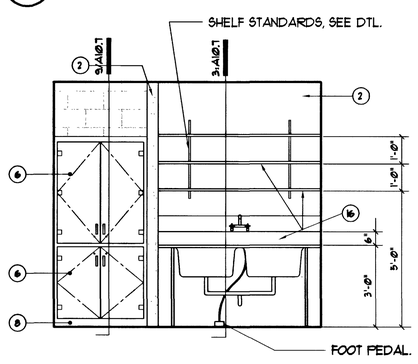


29 CLEAN ROOM 107 (PARTIAL)
Scale: 3/8"=1'-0"

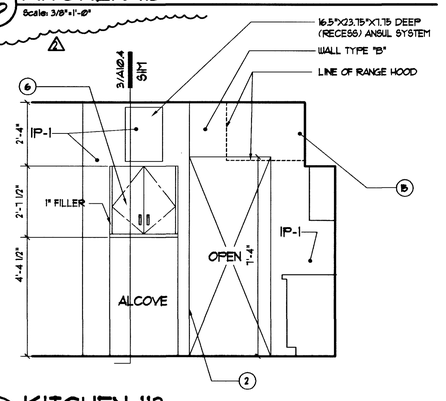


30 KITCHEN 113
Scale: 3/8"=1'-0"

CITY OF LAS VEGAS NEVADA

REVISIONS
1 Per Owner - 10/16/01

CONSULTANT

PUBLIC WORKS

CITY OF LAS VEGAS, NEVADA
FIRE STATION #44

Interior Elevations

STAMP

RECORD DRAWING
DEPARTMENT OF PUBLIC WORKS

OWNER: CITY OF LAS VEGAS
DEPARTMENT OF PUBLIC WORKS
ARCHITECTURAL SERVICES

400 EAST STEWART AVENUE
LAS VEGAS, NEVADA 89101
PHONE: (702) 229-6535
FAX: (702) 382-3232
TDD: (702) 386-9108

| | |
|---|---|
| DRAWN | EPS |
| FILE | Fs44-A8.2 |
| DATE | 10/29/01 |
| SCALE | 3/8"=1'-0" |
| BID NO | 02.15341.02 |
| CLV DWG NO | 630.97 |
| SHT NO | A8.2 |

41 OF 106

DRAWINGS AS INSTRUMENTS OF SERVICE ARE THE PROPERTY OF THE DESIGN PROFESSIONAL WHOSE STAMP OF CERTIFICATION APPEARS ON THE DRAWINGS AND SPECIFICATIONS PREPARED BY THE CLIENT MAY BE UTILIZED ONLY FOR OCCUPYING THE PROJECT FOR WHICH THEY WERE PREPARED AND NOT FOR THE CONSTRUCTION OF ANY OTHER PROJECT. A.L.C. 623.780.
THE DRAWINGS AND SPECIFICATIONS PREPARED BY THE CLIENT MAY BE UTILIZED ONLY FOR OCCUPYING THE PROJECT FOR WHICH THEY WERE PREPARED AND NOT FOR THE CONSTRUCTION OF ANY OTHER PROJECT. A.L.C. 623.780.
THE DESIGN PROFESSIONAL WHOSE STAMP OF CERTIFICATION APPEARS ON THE DRAWINGS AND SPECIFICATIONS PREPARED BY THE CLIENT MAY BE UTILIZED ONLY FOR OCCUPYING THE PROJECT FOR WHICH THEY WERE PREPARED AND NOT FOR THE CONSTRUCTION OF ANY OTHER PROJECT. A.L.C. 623.780.
THE DRAWINGS AND SPECIFICATIONS PREPARED BY THE CLIENT MAY BE UTILIZED ONLY FOR OCCUPYING THE PROJECT FOR WHICH THEY WERE PREPARED AND NOT FOR THE CONSTRUCTION OF ANY OTHER PROJECT. A.L.C. 623.780.
THE DRAWINGS AND SPECIFICATIONS PREPARED BY THE CLIENT MAY BE UTILIZED ONLY FOR OCCUPYING THE PROJECT FOR WHICH THEY WERE PREPARED AND NOT FOR THE CONSTRUCTION OF ANY OTHER PROJECT. A.L.C. 623.780.