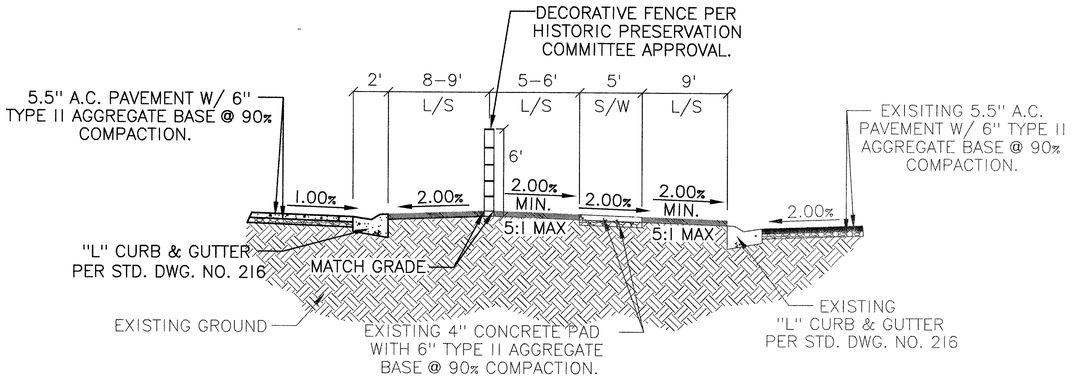

E

5TH STREET SCHOOL

DETAIL

N.T.S.

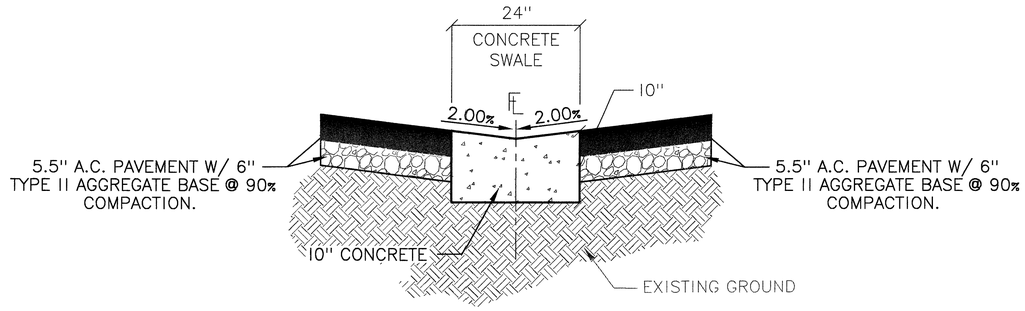

H

24" CONCRETE SWALE

DETAIL

N.T.S.

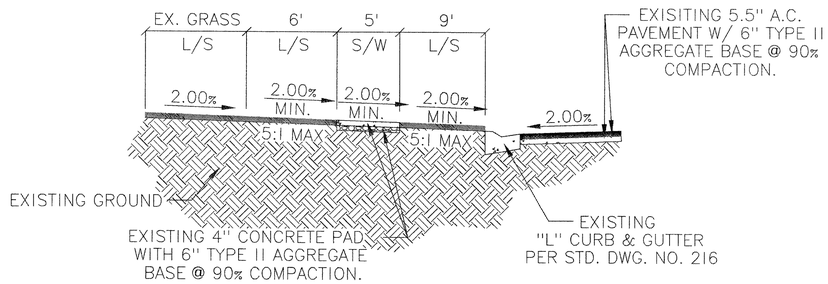

F

5TH STREET SCHOOL

DETAIL

N.T.S.

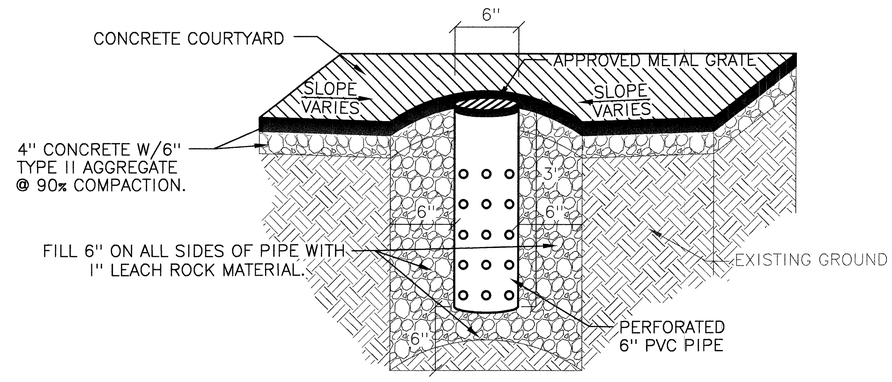

I

6" FRENCH DRAIN

DETAIL

N.T.S.

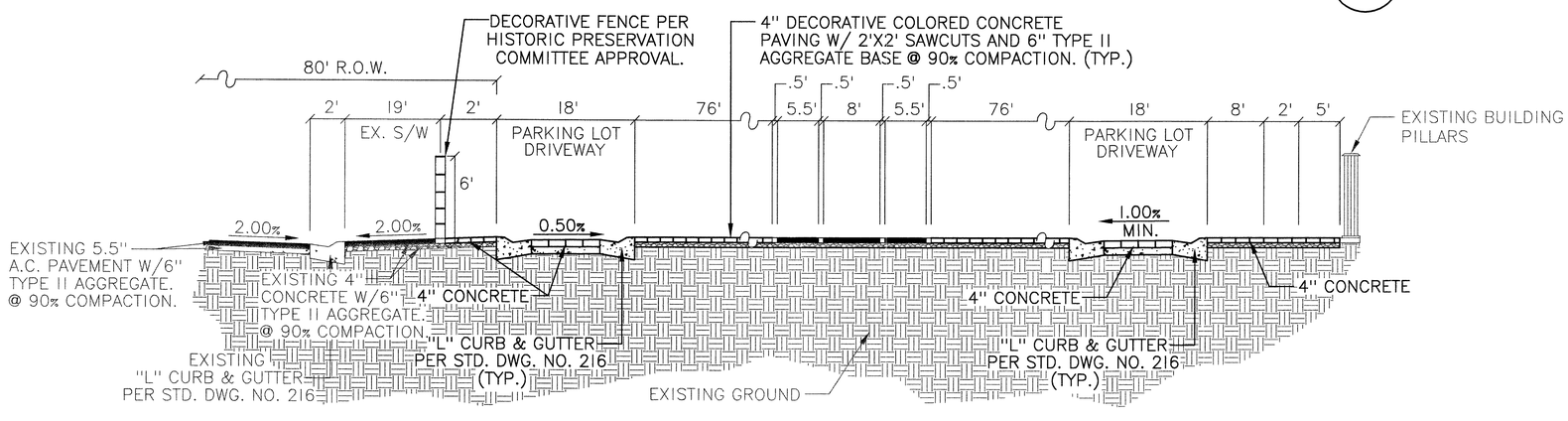

G

5TH STREET SCHOOL

DETAIL

N.T.S.

1-4-07

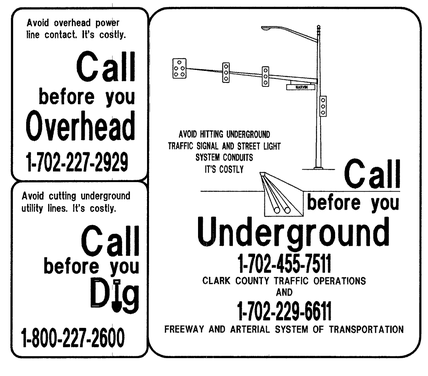

HANSEN# 18021

REV	DATE	BY	REVISION
1			
2			
3			
4			
5			
6			
7			

CITY OF LAS VEGAS
400 EAST STEWART AVENUE
LAS VEGAS, NEVADA 89101
(702) 229-6535

CITY OF LAS VEGAS, NEVADA
2727 SOUTH RAINBOW BOULEVARD LAS VEGAS, NEVADA 89146-5148
PH. (702) 873-7550 FAX (702) 362-2597
nevada CONSULTING ENGINEERS • PLANNERS • LAND SURVEYORS

DETAIL SHEET
FIFTH STREET SCHOOL

FIFTH STREET SCHOOL REHABILITATION
BUILDING DEPARTMENT SUBMITTAL

DRAWN BY: S.PAPPA
DESIGNED BY:
CHECKED BY:
PROJECT NO: 2716
SCALE: HORIZ. N/A VERT. N/A

EXPIRES 06-30-07
PROFESSIONAL ENGINEER • STATE OF NEVADA
DANIEL J. HOOD
CIVIL
No. 12811
1-4-07

SHEET
DT2
9 OF 11 SHEETS

DRAWING NO.
CLV# 513-65E

N:\Civil\5THSTREETSCHOOL-GR.dwg