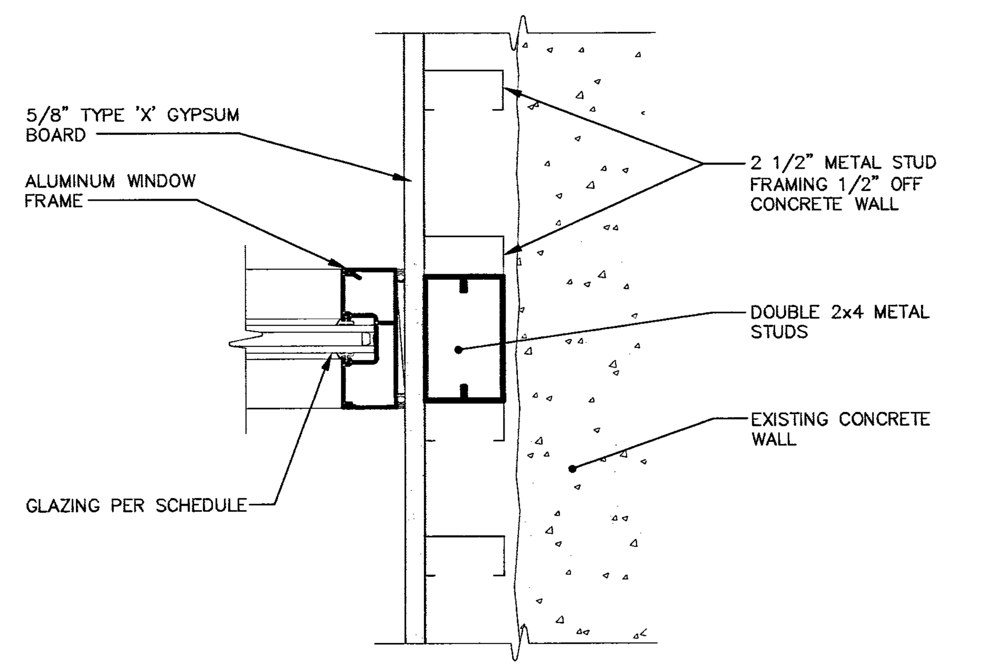

JAMB DETAIL 12
SCALE : 3" = 1'-0" 723wd004.dwg

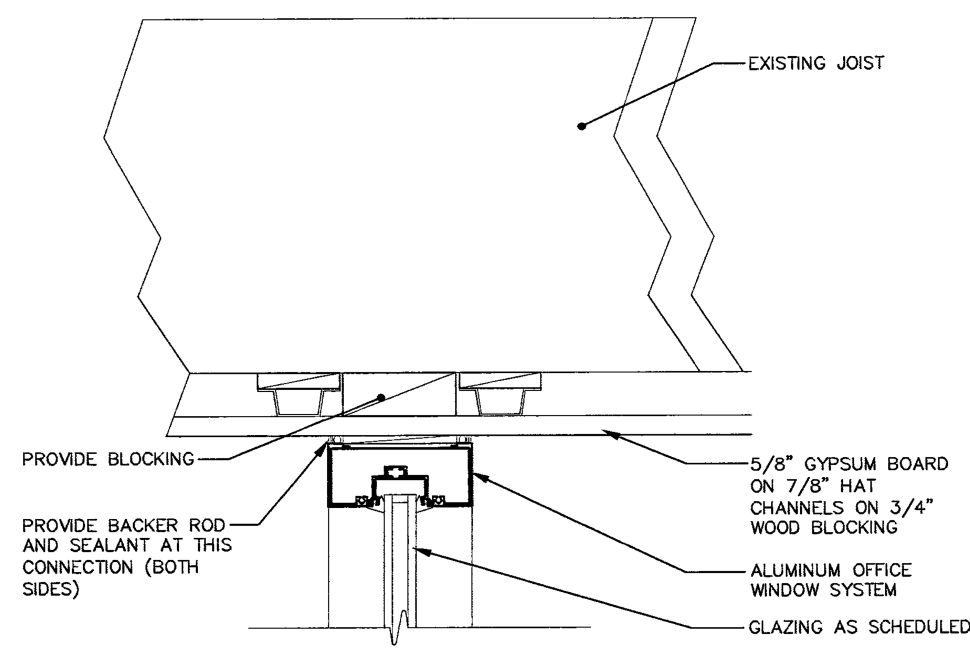

HEAD DETAIL 8
SCALE : 3" = 1'-0" 686wd005.dwg

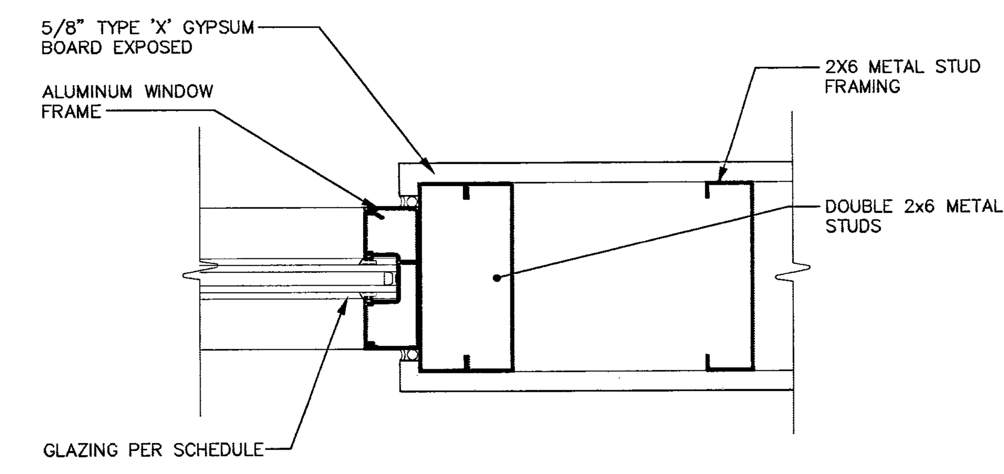

JAMB DETAIL 4
SCALE : 3" = 1'-0" 686wd006.dwg

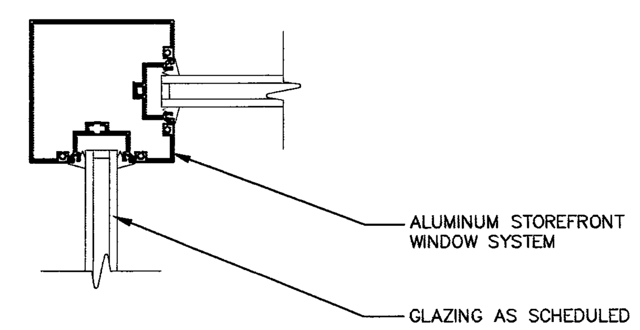

JAMB DETAIL 15
SCALE : 3" = 1'-0" 723wd008.dwg

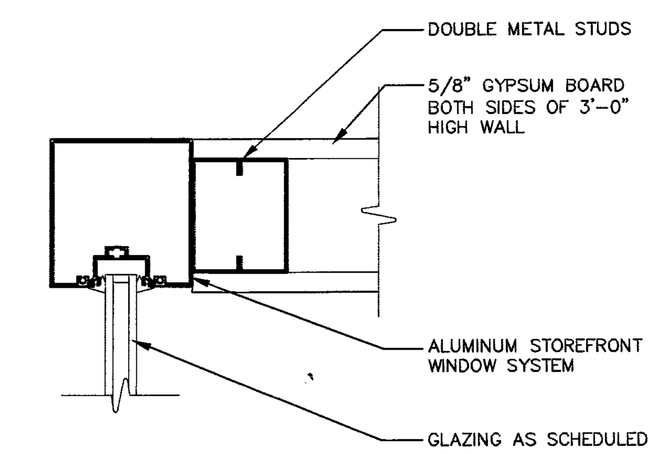

JAMB DETAIL 11
SCALE : 3" = 1'-0" 723wd003.dwg

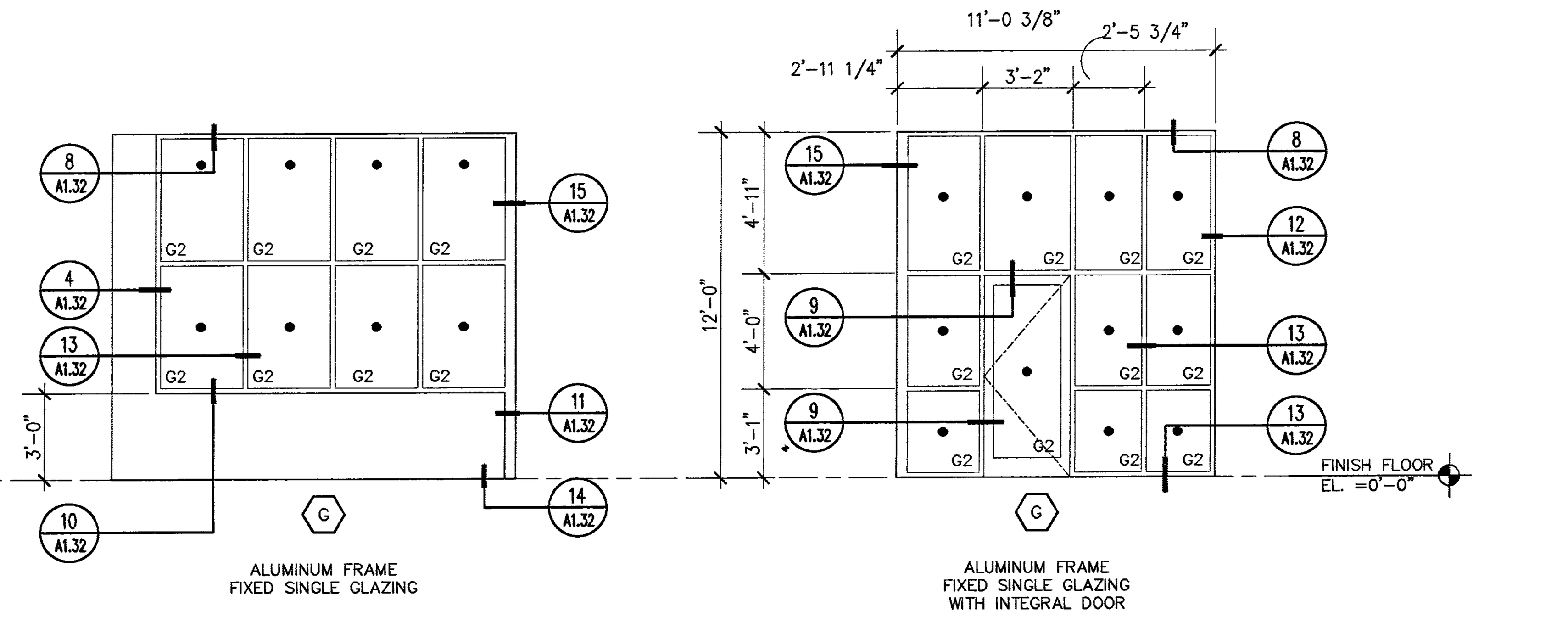

AIA STOREFRONT ELEVATIONS 3
SCALE: 1/4" = 1'-0" 723-windowtypes.dwg

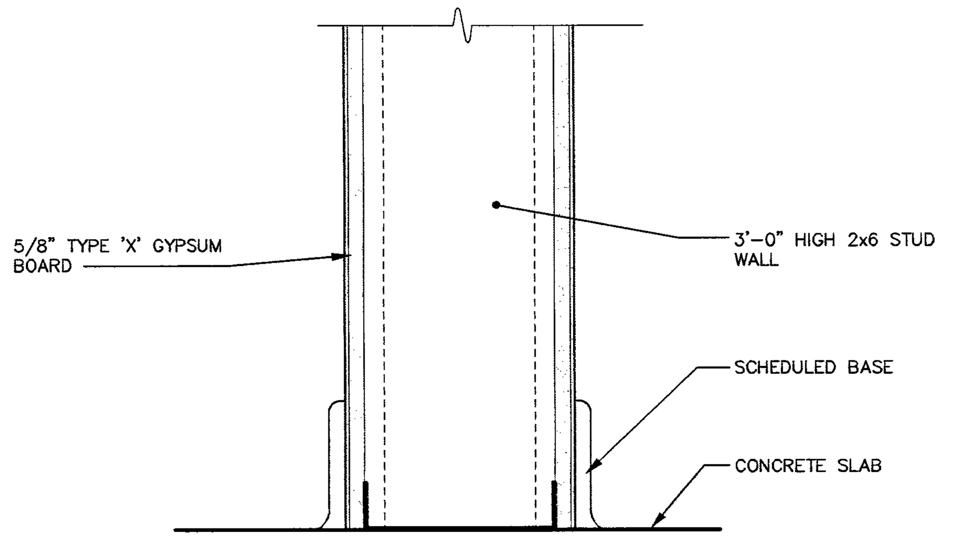

BASE DETAIL 14
SCALE : 3" = 1'-0" 723wd009.dwg

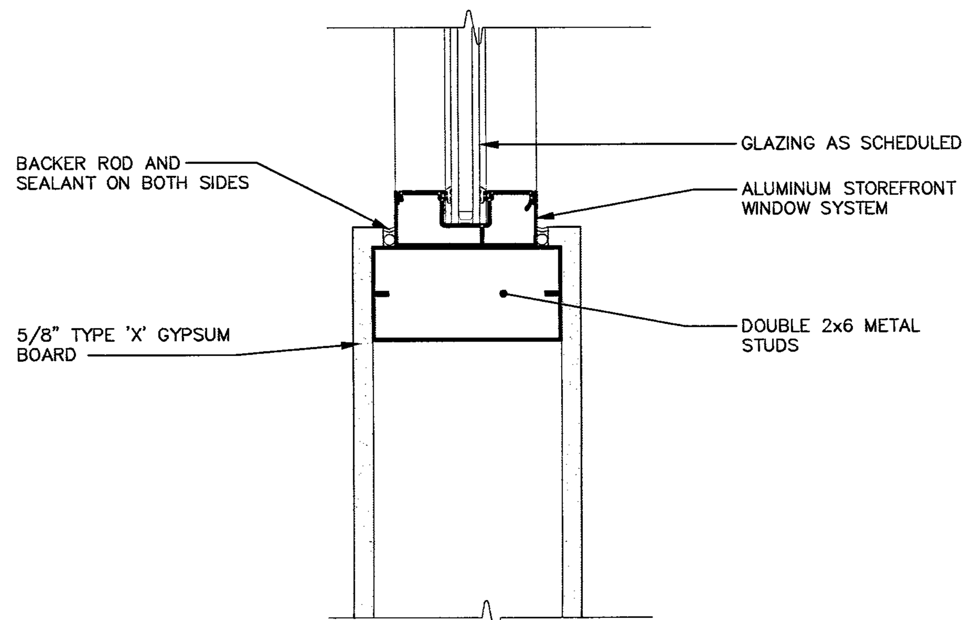

SILL DETAIL 10
SCALE : 3" = 1'-0" 723wd002.dwg

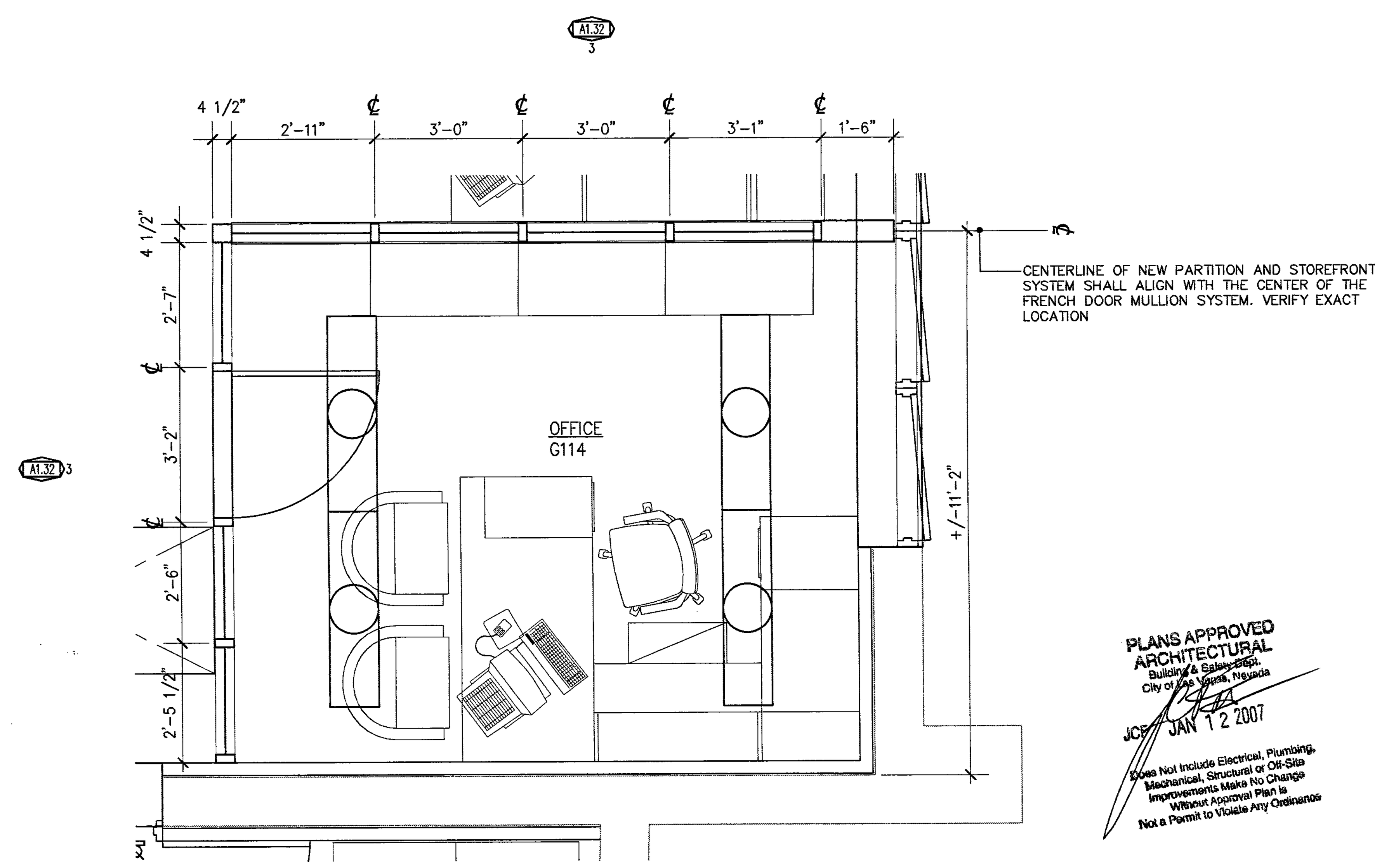

PLANS APPROVED ARCHITECTURAL
JAN 1 2 2007

ENLARGED AIA FLOOR PLAN 1
SCALE: 1/2" = 1'-0" 723-BD21.dwg

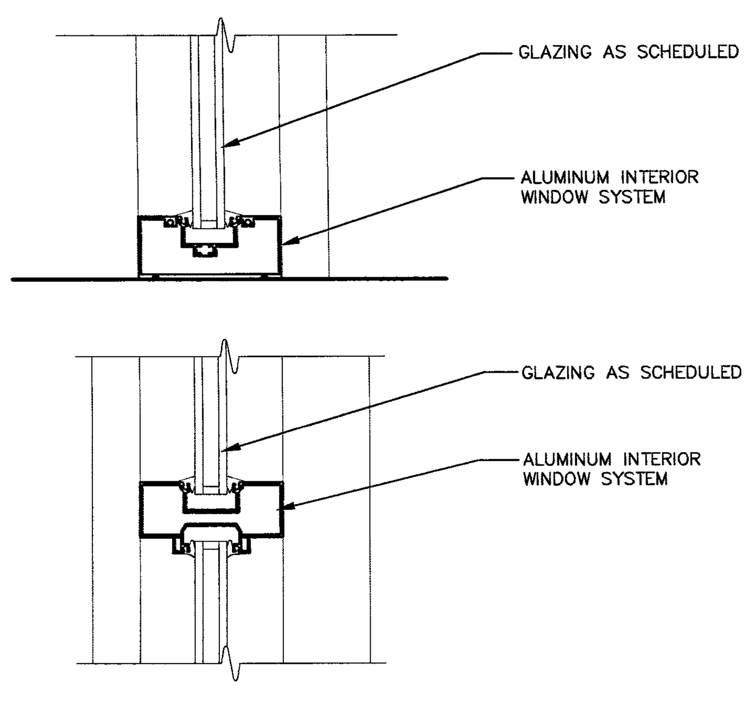

SILL/MULLION DETAIL 13
SCALE : 3" = 1'-0" 723wd001.dwg

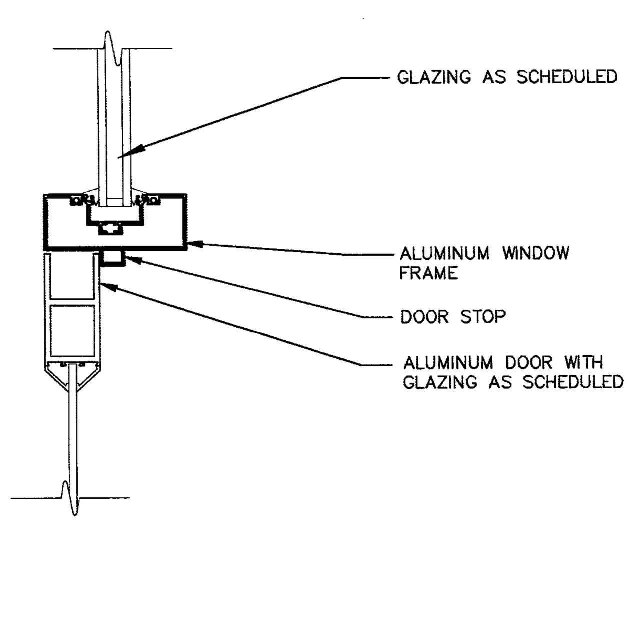

HEAD/ JAMB SIMILAR 9
SCALE : 3" = 1'-0" 723wd002.dwg

PLAN NOTES

P	DESCRIPTION
P1.	DASHED LINE INDICATES STRUCTURE ABOVE
P2.	TELEPHONE
P3.	NEW CONCRETE STAIR AND WALL TO MATCH EXISTING.
P4.	ALIGN WALL BETWEEN WINDOWS.
P5.	AUDITORIUM WALLS SHALL BE WITH 2" THICK FABRIC ACOUSTICAL WALL PANELS SEE INTERIOR ELEVATIONS
P6.	CLERESTORY AUDITORIUM AND PLATFORM WINDOW SHALL HAVE MOTORIZED BLACKOUT SHADES
P7.	NEW ACCESSIBLE RAMP AND RAILING
P8.	FIRE EXTINGUISHER CABINET. SEE 14/A9.01.
P9.	NEW STAIR AND HANDRAIL
P10.	MECHANICAL/MOTORIZED LIFT TO PLATFORM
P11.	RELOCATED ELECTRICAL PANEL SYSTEM. SEE ELECTRICAL DRAWINGS.
P12.	NEW CASEWORK.
P13.	NEW TWO-BAY SINK. SEE PLUMBING DWGS.
P14.	NEW REFRIGERATOR – N.I.C.
P15.	NEW CMU WALL ENCLOSURE. SEE 5/AS2.01.
P16.	STEEL BOLLARD. SEE DETAIL SHEET AS2.01
P17.	CONCRETE PIER. SEE STRUCTURAL DWGS.
P18.	GATE ENCLOSURE-SEE DETAIL 6/AS2.01
P19.	LINE OF EXISTING SKYLIGHT TO BE RESTORED.
P20.	REMOVEABLE RAILING FOR TRUCK DELIVERY. SEE DETAIL 1/A1.33.
P21.	PROVIDE HORIZONTAL MANUAL WINDOW BLIND AT THIS WINDOW.
P22.	EXISTING CONCRETE COLUMN TO REMAIN.
P23.	DRINKING FOUNTAIN. SEE PLUMBING DWGS.
P24.	EXISTING FOUNTAIN TO BE RENOVATED.
P25.	EXISTING COVERED BREEZEWAY
P26.	EXISTING CONSTRUCTION TO BE REMOVED AND/OR RESTORED WITH DOORS AND/OR WINDOWS TO MATCH HISTORIC ERA- REFER TO WINDOW AND DOOR SCHEDULE
P27.	FURNITURE SHOWN ON PLAN SHALL BE TENANT FURNISHED AND TENANT INSTALLED
P28.	NEW SINK. SEE PLUMBING DWGS.
P29.	EXISTING BASEMENT STAIR TO REMAIN. INFILL STAIRWELL & CAP WITH CONC. SLAB.
P30.	EXISTING CONCRETE WALL TO BE REMOVED
P31.	SAND AND FINISH EXISTING CONCRETE WALL FOR PAINT
P32.	NEW BABY CHANGING STATION.
P33.	ALIGN FACE OF NEW PARTITION WITH FACE OF EXISTING CONCRETE
P34.	NEW COUNTER TRASH DISPOSAL.
P35.	ACCESS LADDER AND HATCH SEE 5/A7.31
P36.	NEW CONCRETE. SEE 11/AS2.01.
P37.	1" RECESS INFILL PER 4/A9.05
P38.	LINES INDICATE DIRECTION OF WOOD PLANK FLOORING. SEE STRUCTURAL DWGS.
P39.	RECONSTRUCT SEGMENT OF PARTIAL HEIGHT WALL TO MATCH ADJACENT EXISTING WALL
P40.	REMOVE DOOR, INFILL OPENING WITH CONCRETE, FLUSH TO EXTERIOR WALL. MATCH EXISTING FINISH AND TEXTURE.
P41.	PATTERNED GLASS WINDOW PER SPEC.
P42.	EXISTING METAL GATE
P43.	ROOF DRAIN SEE DETAIL 3/A7.31
P44.	INSTALL NEW CABINET DOORS ON EXISTING CABINET. SEE DETAIL 5/A8.02
P45.	STAGELAM HIGH TRAFFIC FLOORING'
P46.	EXISTING CONCRETE PAD TO REMAIN
P47.	EXISTING DIVIDED LIGHT TRANSOM/DOOR ASSEMBLY
P48.	CONCRETE SUMP PIT W/ STEEL GRATE
P49.	FURR OVER WINDOW.

GENERAL NOTES

1. DIMENSIONS ARE TO FACE OF STUD, FACE OF MASONRY OR FACE OF CONCRETE UNLESS NOTED OTHERWISE.
2. INFORM ARCHITECT OF ANY DISCREPANCIES BEFORE BEGINNING WORK.
3. PRIOR TO CONSTRUCTION, CONTRACTOR SHALL FIELD VERIFY ALL EXISTING CONDITIONS. IN AREAS REQUIRING REPAIR AND/OR REMOVAL, CONTRACTOR SHALL PATCH AND PREP SURFACES FOR NEW FINISH.
4. PATCH ALL HOLES IN EXTERIOR CONCRETE WALLS INCLUDING LADDER HOLES, CONDUIT, AND PIPE HOLES, ETC. CAUSED BY DEMO.
5. REPAIR AND PAINT ALL CRAWL SPACE VENT GRILLES – TYPICAL.

WALL TYPES

A — WALL TYPE SYMBOL – SEE SHEET A2.32 & A2.33 FOR WALL TYPES

NOTES

1. WALL TYPES WITH AN 'S' SUBSCRIPT INDICATE FIBERGLASS ACOUSTICAL INSULATION FULL HEIGHT AND DEPTH OF PARTITION NOTED AND REQUIRES THE GYP. BOARD TO EXTEND FROM TOP OF FLOOR SLAB TO UNDERSIDE OF STRUCTURE ABOVE ON ONE SIDE OF PARTITION THAT OTHERWISE WOULD NOT EXTEND TO THE STRUCTURE ABOVE.
2. PROVIDE HEAVY GAGE METAL STUDS IN LIEU OF LIGHT GAGE METAL STUDS AT WALLS WITH ANY WALL HUNG TYPE ATTACHMENTS AND/ OR SUPPORTING ATTACHMENTS SUCH AS WALL SINKS, GRAB BARS, WALL CABINETS AND OTHER MISC. EQUIPMENT.
3. ALL WALLS IN WET AREAS SHALL HAVE 5/8" TYPE 'X' WATER-RESISTANT GYPSUM BOARD IN LIEU OF 5/8" TYPE 'X' (REGULAR) GYPSUM BOARD.
4. ALL INTERIOR PARTITIONS ARE NON-BEARING.
5. WALLS WITH SUBSCRIPT 'T' INDICATES WALLS WITH THERMAL INSULATION FOR THE FULL HEIGHT OF THE WALL.

WALL LEGEND

- FRAMED INTERIOR PARTITION
- EXISTING CONCRETE PARTITION
- NEW CONCRETE PARTITION
- FURRED CONCRETE PARTITION
- 1 HOUR RATED FRAMED INTERIOR PARTITION PER U.L. DESIGN WJ2005. SEE DETAIL 11/A9.06.

BUILDING MAP

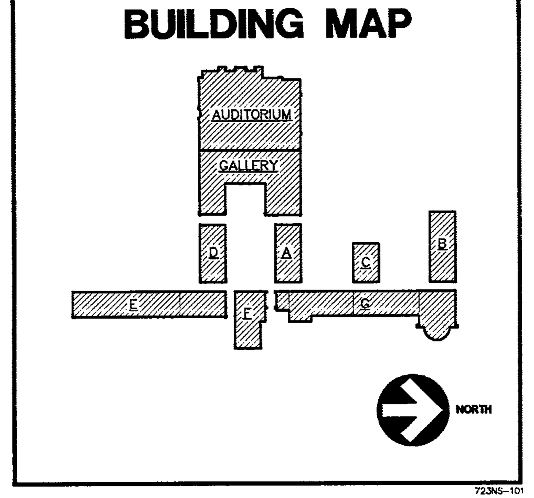

REVISIONS

CONSULTANT

HISTORICAL
HERITAGE ARCHITECTURE & PLANNING

CIVIL – VTN NEVADA

STRUCTURAL – BARKER DROTTAR ASSOCIATES STRUCTURAL ENGINEERS

MECHANICAL – PLUMBING – ELECTRICAL – LIFE SAFETY – ACOUSTICAL – GENERAL LIGHTING
JBA CONSULTING ENGINEERS

STAGE LIGHTING & DESIGN – CD+M LIGHTING DESIGN GROUP

LANDSCAPE – JWZUNINO & ASSOCIATES

COST ESTIMATING – RIDER HUNT LEVETT & BAILEY

ADA ACCESSIBILITY
ENDELMAN AND ASSOCIATES

CITY OF LAS VEGAS NEVADA

FIFTH STREET SCHOOL
REHABILITATION
BUILDING DEPARTMENT SUBMITTAL

REVISED 2-27-07

CITY OF LAS VEGAS REDEVELOPMENT AGENCY

STAMP

DEC 1 2 2006

OWNER: CITY OF LAS VEGAS DEPARTMENT OF PUBLIC WORKS ARCHITECTURAL SERVICES

400 EAST STEWART AVENUE LAS VEGAS, NEVADA 89101
PHONE: (702) 229-6535
FAX: (702) 384-4846
TDD: (702) 386-9108

TITLE AIA SPACE
DATE 12/12/2006
SCALE VARIES
CLV DWG NO 513-65E
SHT NO A1.32

REVISED 6/27/03