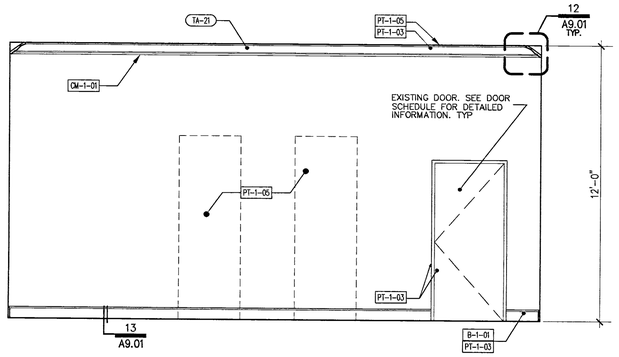

OFFICE ROOM – F100 — 12

SCALE: 3/8" = 1'-0" — 723IE053

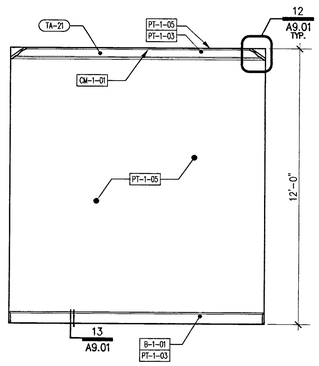

OFFICE ROOM – F101 — 8

SCALE: 3/8" = 1'-0" — 723IE046

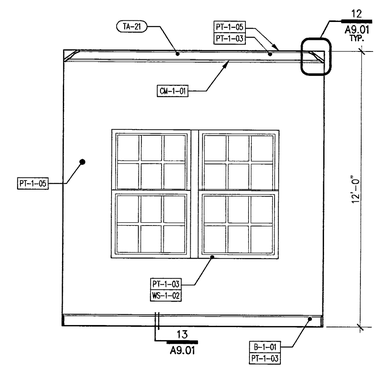

RDA OFFICE ROOM – G100 — 4

SCALE: 3/8" = 1'-0" — 723IE042

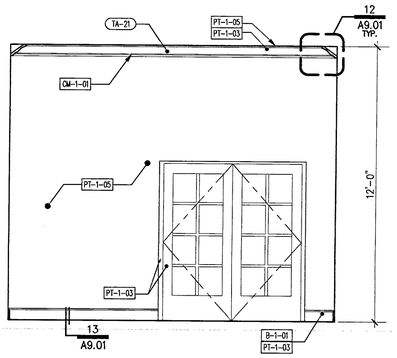

OFFICE ROOM – F100 — 15

SCALE: 3/8" = 1'-0" — 723IE052

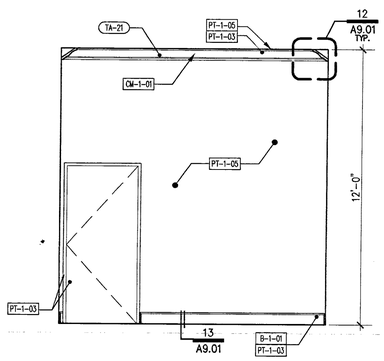

OFFICE ROOM – F102 — 11

SCALE: 3/8" = 1'-0" — 723IE049

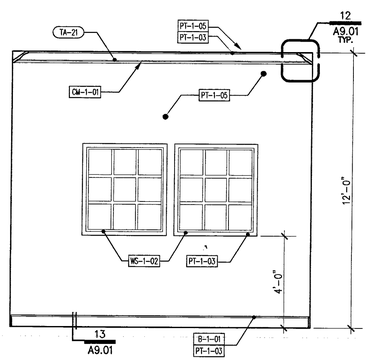

OFFICE ROOM – F101 — 7

SCALE: 3/8" = 1'-0" — 723IE045

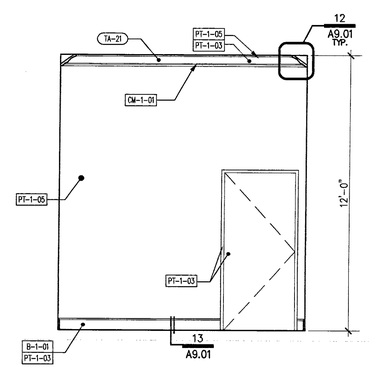

RDA OFFICE ROOM – G100 — 3

SCALE: 3/8" = 1'-0" — 723IE041

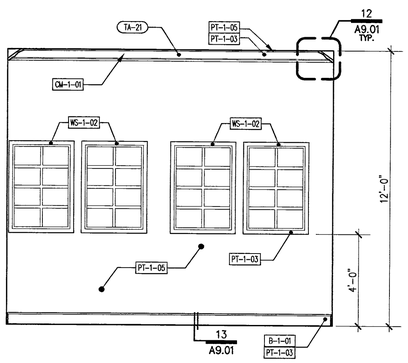

OFFICE ROOM – F100 — 14

SCALE: 3/8" = 1'-0" — 723IE051

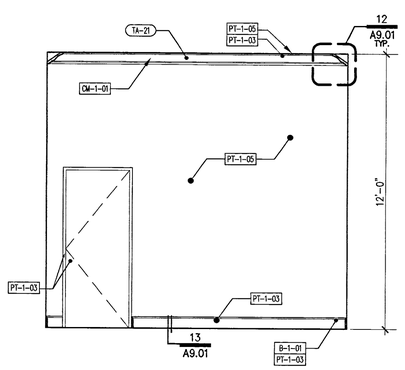

OFFICE ROOM – F102 — 10

SCALE: 3/8" = 1'-0" — 723IE048

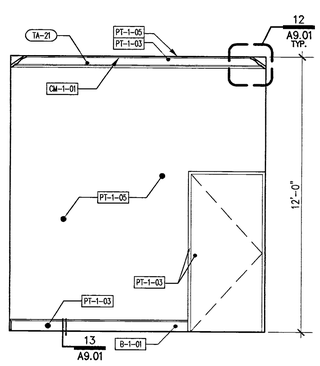

OFFICE ROOM – F101 — 6

SCALE: 3/8" = 1'-0" — 723IE044

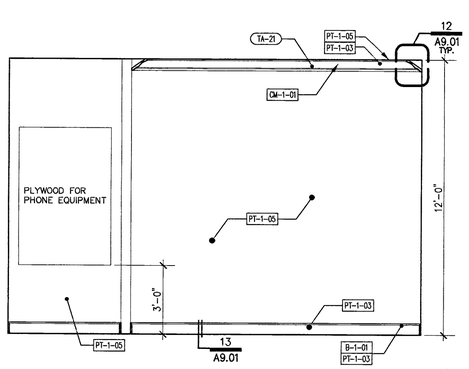

RDA OFFICE ROOM – G100 — 2

SCALE: 3/8" = 1'-0" — 723IE040

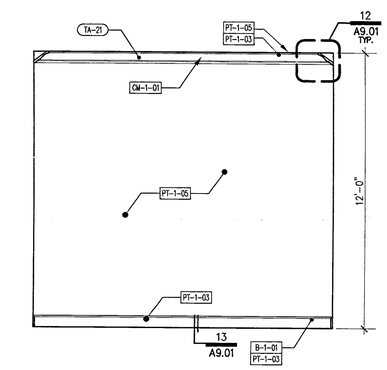

OFFICE ROOM – F102 — 13

SCALE: 3/8" = 1'-0" — 723IE050

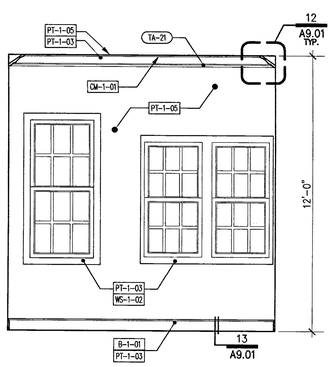

OFFICE ROOM – F102 — 9

SCALE: 3/8" = 1'-0" — 723IE047

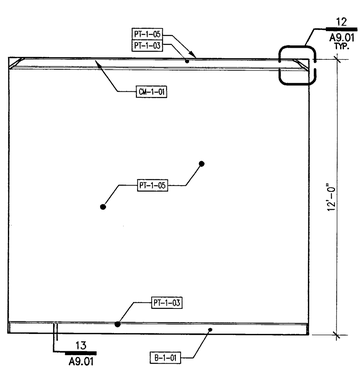

OFFICE ROOM – F101 — 5

SCALE: 3/8" = 1'-0" — 723IE043

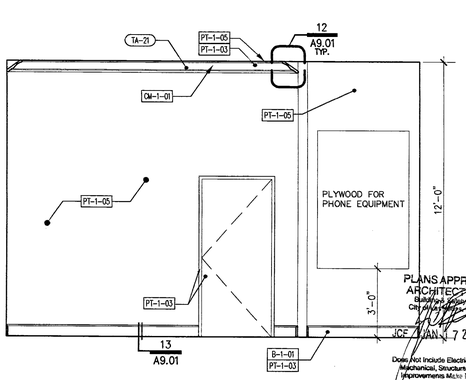

RDA OFFICE ROOM – G100 — 1

SCALE: 3/8" = 1'-0" — 723IE039

PLANS APPROVED
ARCHITECTURAL
Building Division
City of Las Vegas
JAN 17 2007
Does Not Include Electrical, Plumbing, Mechanical, Structural or Civil.
Improvements Must Not Change Without Approval
Not a Permit

NUMBER
AREA
XXX-XX-XX
ABBREVIATION

TOLIET ACCESSORIES

TA-#	DESCRIPTION
TA-1	SEMI- RECESSED PAPER TOWEL DISPENSER/ WASTE RECEPTACLE (BOBRICK B-3944). MOUNT TOP OF CABINET AT 60 1/2" A.F.F.
TA-2	COUNTER OR LAVATORY- MOUNTED LIQUID SOAP DISPENSER (BOBRICK B-822)
TA-3	FABRIC BURN GUARD-BOBRICK
TA-4	MIRROR-POLISHED EDGE
TA-5	PARTITION – MOUNTED MULTI-ROLL TOILET TISSUE AT 28" A.F.F. (BOBRICK B-4288).
TA-6	PARTITION – MOUNTED TOILET SEAT COVERS AND TOILET TISSUE DISPENSER. (BOBRICK B-304).
TA-7	RECESSED TOILET SEAT COVER AND TOILET TISSUE DISPENSER. (BOBRICK B-3571).
TA-8	GRAB BAR "L" SHAPED 36"X54" (BOBRICK B-5837). MOUNT CENTER OF BAR AT 34" A.F.F. SEE DETAIL 4/A9.07.
TA-9	TOILET PARTITION. SEE DETAIL 2/A9.07.
TA-10	SURFACE-MOUNTED PAPER TOWEL DISPENSER (BOBRICK B-262).
TA-11	GRAB BARS (BOBRICK B-5806) X 42). MOUNT CENTER OF BAR AT 34" A.F.F. WITH CENTER OF FLANGE AT 12" FROM BACK WALL. SEE DETAIL 4/A9.07.
TA-12	SEMI-RECESSED TOILET PAPER DISPENSER (BOBRICK B-697).
TA-13	RECESSED PAPER TOWEL DISPENSER (BOBRICK B-35903).
TA-14	GRAB BAR "L" SHAPED 30" X 42" (BOBRICK B-5837). MOUNT CENTER OF BAR AT 34" A.F.F. SEE DETAIL 4/A9.07.
TA-15	SOAP DISPENSER (BOBRICK B-2112).
TA-16	TOILET SEAT COVER DISPENSER (BOBRICK B-4221).
TA-17	BABY CHANGING STATION (BOBRICK B-2210).
TA-18	DRINKING FOUNTAIN.
TA-19	CERAMIC TILE SHOWER BASE WITH DRAIN. SEE DETAIL 6/A9.07.
TA-20	DOOR STOP. SEE DETAIL 3/A9.07.
TA-21	12" CONCRETE LEDGE
TA-22	CARPET TO TILE FLOOR TRANSITION DETAIL. SEE DETAIL 5/A9.07.
TA-23	GARBAGE DISPOSAL
TA-24	URINAL SCREEN

GENERAL NOTE

1. PROVIDE BACKING FOR ALL FIXTURES AND ACCESSORIES

INTERIOR FINISH SCHEDULE

KEY	DESCRIPTION
AF-1-01	ACOUSTIC WALL PANEL FABRIC– SEE FINISH SCHEDULE SHT. ID1.00/ID1.01
AP-1-01	ACOUSTIC WALL PANEL– SEE FINISH SCHEDULE SHT. ID1.00/ID1.01
AP-1-03	ACOUSTIC CEILING– SEE FINISH SCHEDULE SHT. ID1.00/ID1.01
B-1-01	CUSTOM BASE TO MATCH EXISTING– SEE FINISH SCHEDULE SHT. ID1.00/ID1.01
B-1-02	CUSTOM BASE TO MATCH EXISTING– SEE FINISH SCHEDULE SHT. ID1.00/ID1.01
CM-1-01	CUSTOM CROWN TO MATCH EXISTING– SEE FINISH SCHEDULE SHT. ID1.00/ID1.01
CPT-1-01	C & A CHOAS 15021 CASSIA BARK SEE FINISH SCHEDULE SHT. ID1.00/ID1.01
DL-1-01	LITECONTROL – CIROS SEE FINISH SCHEDULE SHT. EG1.02
DL-1-04	WAC 1126 SEE FINISH SCHEDULE SHT. EG1.02
DL-1-06	STAGE – SEE FINISH SCHEDULE SHT. LT1.01 & LT1.02
DL-1-07	6" APERTURE – NON IC WHITE CLW– SEE FINISH SCHEDULE SHT. EG1.02
DL-1-08	PENDANT FIXTURE– SEE FINISH SCHEDULE SHT. EG1.02
HA-1-01	HANGING ART BRUSHED NICKEL– SEE FINISH SCHEDULE SHT. ID1.00/ID1.01
LAM-1-01	LAMINATE– SEE FINISH SCHEDULE SHT. ID1.00/ID1.01
MB-1-01	MARKER/CORD BOARD CHERRY– SEE FINISH SCHEDULE SHT. ID1.00/ID1.01
PT-1-01	PAINT– SEE FINISH SCHEDULE SHT. ID1.00/ID1.01
PT-1-02	PAINT– SEE FINISH SCHEDULE SHT. ID1.00/ID1.01
PT-1-03	PAINT– SEE FINISH SCHEDULE SHT. ID1.00/ID1.01
PT-1-04	PAINT– SEE FINISH SCHEDULE SHT. ID1.00/ID1.01
PT-1-05	PAINT– SEE FINISH SCHEDULE SHT. ID1.00/ID1.01
PT-1-06	PAINT– SEE FINISH SCHEDULE SHT. ID1.00/ID1.01
PT-1-07	PAINT– SEE FINISH SCHEDULE SHT. ID1.00/ID1.01
PT-1-08	PAINT– SEE FINISH SCHEDULE SHT. ID1.00/ID1.01
SF-1-01	STAGE LAMINATE– SEE FINISH SCHEDULE SHT. ID1.00/ID1.01
SS-1-01	SOLID SURFACING COPPER NUGGET– SEE FINISH SCHEDULE SHT. ID1.00/ID1.01
SS-1-02	SOLID SURFACING BLACK LAVA– SEE FINISH SCHEDULE SHT. ID1.00/ID1.01
T-1-01	FIORITO NOCE FR21– SEE FINISH SCHEDULE SHT. ID1.00/ID1.01
T-1-02	KEYSTONES UNGLAZED BLACK– SEE FINISH SCHEDULE SHT. ID1.00/ID1.01
T-1-03	FIORITO NOCE FR21– SEE FINISH SCHEDULE SHT. ID1.00/ID1.01
T-1-04	FIORITO COTTA FR24– SEE FINISH SCHEDULE SHT. ID1.00/ID1.01
T-1-05	VILLAGE BLEND NOCE FR21– SEE FINISH SCHEDULE SHT. ID1.00/ID1.01
TP-1-01	POWDER COATED STEEL PARTITIONS– SEE FINISH SCHEDULE SHT. ID1.00/ID1.01
WD-1-01	WOOD FLOOR– SEE FINISH SCHEDULE SHT. ID1.00/ID1.01
WD-1-02	WOOD PANELS– SEE FINISH SCHEDULE SHT. ID1.00/ID1.01
WD-1-03	WOOD PANELS– SEE FINISH SCHEDULE SHT. ID1.00/ID1.01
WS-1-01	EQUINOX 0100–0110 NEUTRAL–MOTORIZED SEE FINISH SCHEDULE SHT. ID1.00/ID1.01
WS-1-02	WINDOWMATES – CREAM SEE FINISH SCHEDULE SHT. ID1.00/ID1.01

REVISIONS

CONSULTANT

KGA ARCHITECTURE
KITTELSON GARDNER AND ASSOCIATES, LTD.
4495 SOUTH POLARIS AVENUE
LAS VEGAS, NEVADA 89103
WWW.KGA-ARCHITECTURE.COM
TELEPHONE 702 . 367 . 5000
FACSIMILE 702 . 367 . 2043

HISTORICAL –
HERITAGE ARCHITECTURE & PLANNING
PHONE 619-239-7588

CIVIL –
VTN NEVADA
PHONE 702-471-7500

STRUCTURAL –
BARKER DROTTAR ASSOCIATES STRUCTURAL ENGINEERS
PHONE 702-798-8000

MECHANICAL / PLUMBING – ELECTRICAL – LIFE SAFETY – ACOUSTICAL – GENERAL LIGHTING
JBA CONSULTING ENGINEERS
PHONE 702-362-5200

STAGE LIGHTING & DESIGN –
CDHM LIGHTING DESIGN GROUP
PHONE 619-224-2323

LANDSCAPE –
JWZUMWINO & ASSOCIATES
PHONE 702-233-5990

COST ESTIMATING –
RIDER HUNT LEVETT & BAILEY
702-227-6818

ADA ACCESSIBILITY
ENDELMAN AND ASSOCIATES
PHONE 206-323-6462

CITY OF LAS VEGAS NEVADA

FIFTH STREET SCHOOL
REHABILITATION
BUILDING DEPARTMENT SUBMITTAL

REVISED 12-29-07

CITY OF LAS VEGAS
REDEVELOPMENT AGENCY

STAMP

F. GARLOCK DESIGN GROUP STATE OF NEVADA

OWNER: CITY OF LAS VEGAS
DEPARTMENT OF PUBLIC WORKS
ARCHITECTURAL SERVICES

400 EAST STEWART AVENUE
LAS VEGAS, NEVADA 89101
PHONE: (702)229-6555
FAX: (702)384-4848
TDD: (702)386-9108

DRAWN
FILE
INTERIOR ELEVATIONS
DATE 12/12/2006
SCALE 3/8" = 1'-0"
REV NO
CLV DWG NO 513-65E
SHT NO A5.05

REVISED 8/27/03

DRAWINGS AS INSTRUMENTS OF SERVICE ARE THE PROPERTY OF THE DESIGN PROFESSIONAL WHO PREPARED THEM. THE CLIENT MAY BE UTILIZED ONLY FOR OCCUPYING THE PROJECT FOR WHICH THEY WERE PREPARED AND NOT FOR THE CONSTRUCTION OF ANY OTHER PROJECT. N.A.G. 623.780
THIS DOCUMENT IS STRICTLY PROHIBITED COPIES OF THE DRAWINGS AND SPECIFICATIONS PREPARED BY THE CLIENT MAY BE UTILIZED ONLY FOR OCCUPYING THE PROJECT FOR WHICH THEY WERE PREPARED AND NOT FOR THE CONSTRUCTION OF ANY OTHER PROJECT. N.A.G. 623.780
THE DESIGN PROFESSIONAL'S SEAL AND/OR CERTIFICATION APPEARS ON THE DRAWINGS AND SPECIFICATIONS ARE THE PROPERTY OF THE DESIGN PROFESSIONAL WHO PREPARED THEM. THE CLIENT MAY BE UTILIZED ONLY FOR OCCUPYING THE PROJECT FOR WHICH THEY WERE PREPARED AND NOT FOR THE CONSTRUCTION OF ANY OTHER PROJECT. N.A.G. 623.780
DRAWINGS AS INSTRUMENTS OF SERVICE ARE THE PROPERTY OF THE DESIGN PROFESSIONAL WHO PREPARED THEM. THE CLIENT MAY BE UTILIZED ONLY FOR OCCUPYING THE PROJECT FOR WHICH THEY WERE PREPARED AND NOT FOR THE CONSTRUCTION OF ANY OTHER PROJECT. N.A.G. 623.780

113298

26-76