ALL DIMENSIONS ARE IN MILLIMETERS UNLESS OTHERWISE NOTED, ALL STATIONS ARE IN METERS.

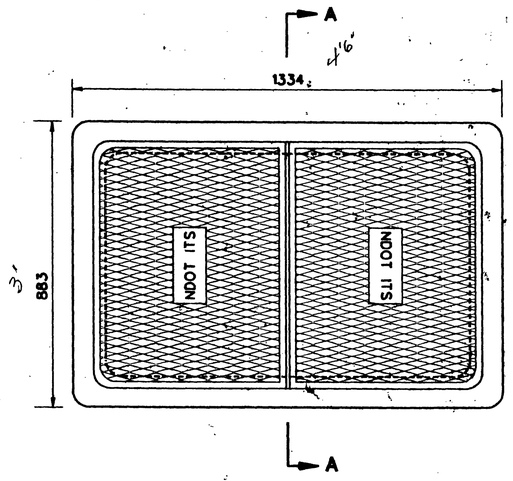

PLAN VIEW

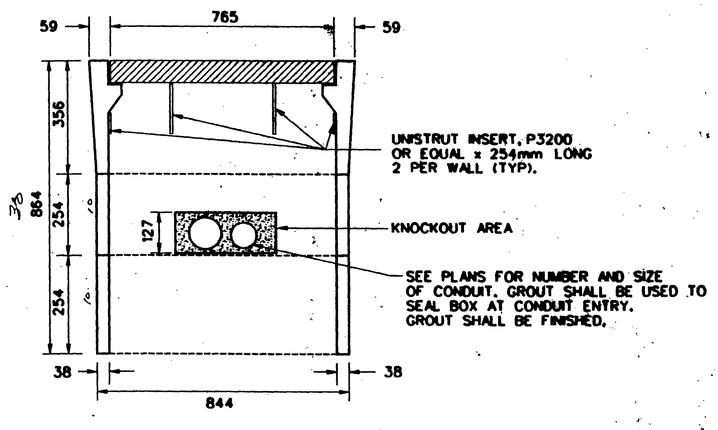

SECTION A-A

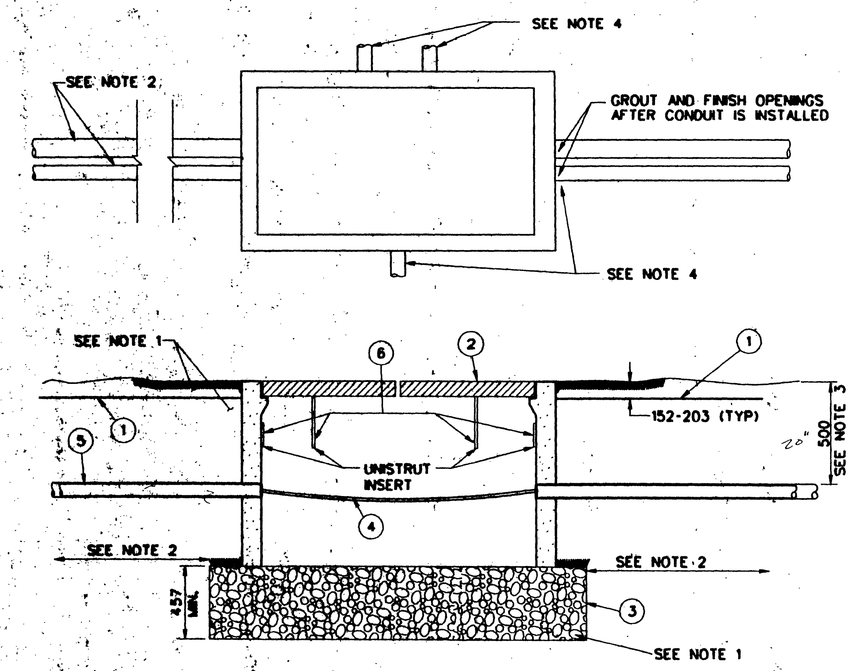

NOTES:

1. BACKFILL WITH AGGREGATE ACCORDING TO NDOT STANDARD SPECS BELOW PULL BOX. BACKFILL AROUND SIDES OF PULL BOX WITH SELECT EXCAVATED MATERIAL AND THOROUGHLY COMPACT.
2. CONDUIT FROM THE TYPICAL TRENCH SECTION SHALL NOT DEFLECT BY MORE THAN 10 m/METER FROM THE ALIGNMENT PRECEDING OR FOLLOWING THE PULL BOX.
3. TOP OF CONDUITS SHALL BE LOCATED AT LEAST 500mm BELOW EXISTING GROUND. CONDUIT SHALL BE FLUSH WITH INSIDE OF PULLBOX.
4. SEE PLAN SHEETS FOR NUMBER AND SIZE OF CONDUIT.
5. NUMBERS IN CIRCLES REFER TO ITEMS IN MATERIAL LIST.
6. ALL BOXES SHALL BE FURNISHED WITH RACKS & HOOKS INSTALLED.
7. CONDUITS ENTER THROUGH KNOCKOUTS.
8. PULL BOX AND STEEL COVER SHALL SUPPORT AASHTO H20-44 TRUCK LOADING. REBAR SHALL BE USED TO STRENGTHEN CONCRETE TOP SECTION.
9. LOCKING MECHANISM SHALL BE PROVIDED FOR COVER. FOUR 19mm PENTA BOLTS AT 90° SHALL BE USED. ONE 19mm PENTA HEAD SOCKET AND RATCHET SHALL BE PROVIDED.
10. "NDOT ITS" SHALL BE THE TITLE INTEGRATED IN THE LID.

MATERIAL LIST	
ITM	DESCRIPTION
1	WARNING TAPE
2	NO. 9 PULLBOX
3	BEDDING MATERIAL
4	ELECTRICAL POWER CABLES AND TWISTED WIRE PAIR, AS REQUIRED
5	CONDUIT (SEE PLANS FOR SIZE AND QUANTITY)
6	RACK & HOOK ASSEMBLY (EACH WALL TYP)

DATE
REVISIONS

HALF SCALE 1:1000 | FULL SCALE 1:500 | W.A. # | DESIGN BY
F.I.D. BK. # | DATE

Kimley-Horn and Associates, Inc.
Engineering, Planning, and Environmental Consultants
© 1999

DEPARTMENT OF PUBLIC WORKS

I-15 FREEWAY CHANNEL
ITS INFRASTRUCTURE
NO. 9 PULL BOX INSTALLATION

DRAWING NO. IT-7

52268

327-V254