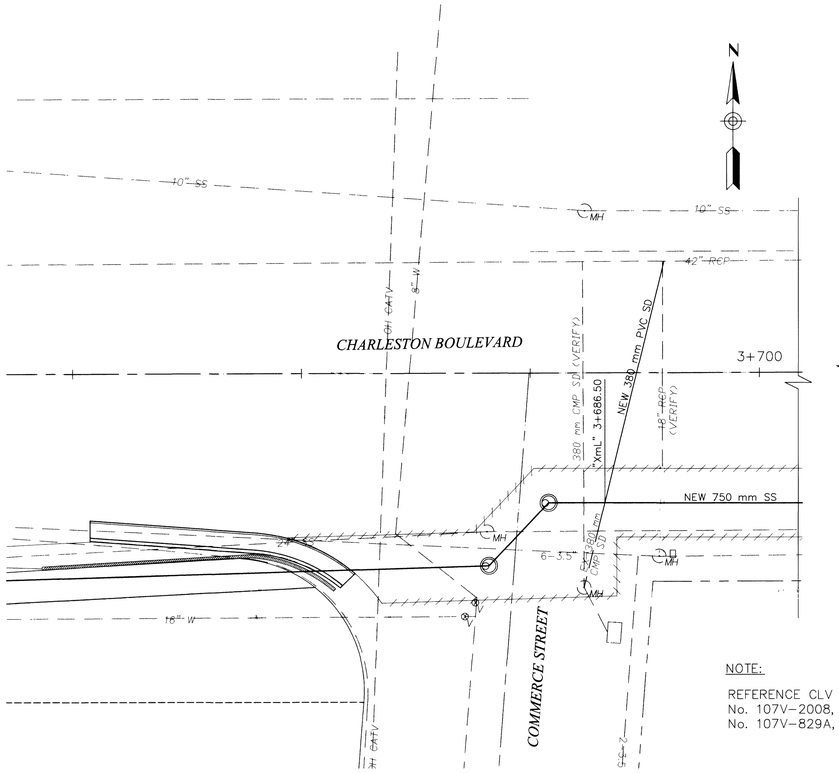

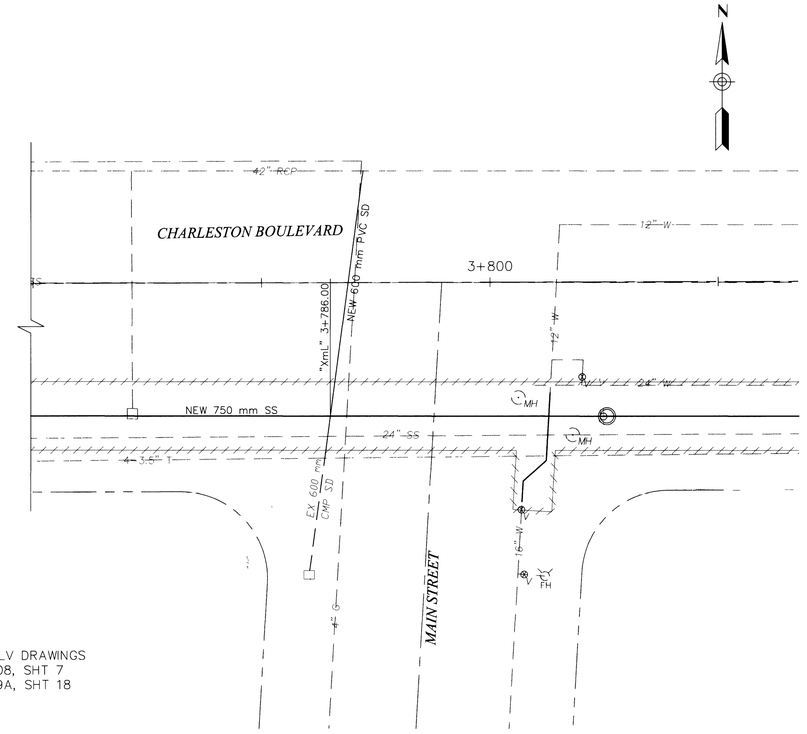

NOTE:

REFERENCE CLV DRAWINGS
No. 107V-2008, SHT 7
No. 107V-829A, SHT 18

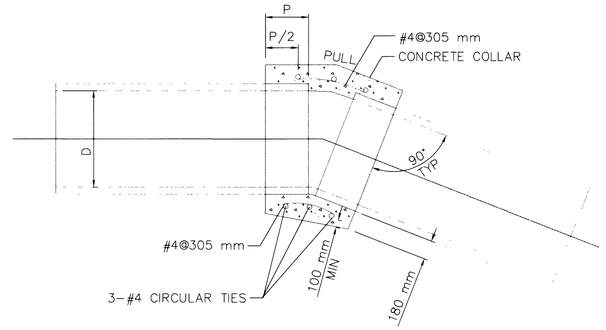

NOTES:

1. THE CONTRACTOR SHALL FIELD VERIFY ALL ELEVATIONS AND DIMENSIONS PRIOR TO BEGINNING WORK IF ANY DIMENSIONS OR ELEVATIONS DO NOT MATCH THIS PLAN, THE CONTRACTOR SHALL NOTIFY THE ENGINEER IMMEDIATELY
2. A CONCRETE COLLAR IS REQUIRED WHERE THE CHANGE IN HORIZONTAL OR VERTICAL EXCEEDS 10°
3. P=0.3 m FOR PIPES 610 mm OR LESS
4. WHERE REINFORCING IS REQUIRED THE DIAMETER OF CIRCULAR TIES SHALL BE D+ (2 X WALL THICKNESS) + 203 mm
5. WHERE STORM SEWER PIPE CROSSES UNDER EXISTING SANITARY SEWERS, THE TRENCH SHALL BE BACKFILLED WITH LOW STRENGTH FLOWABLE FILL, FOR A DISTANCE OF 3.0 m ON BOTH SIDES OF THE CENTER LINE OF THE SANITARY CROSSING UP TO THE INVERT OF THE SANITARY SEWER
6. WORK SHALL BE PERFORMED AT NIGHT
7. ALIGNMENT OF NEW PVC STORM DRAIN LATERALS SHALL FOLLOW ALIGNMENT OF EXISTING CMP STORM DRAIN

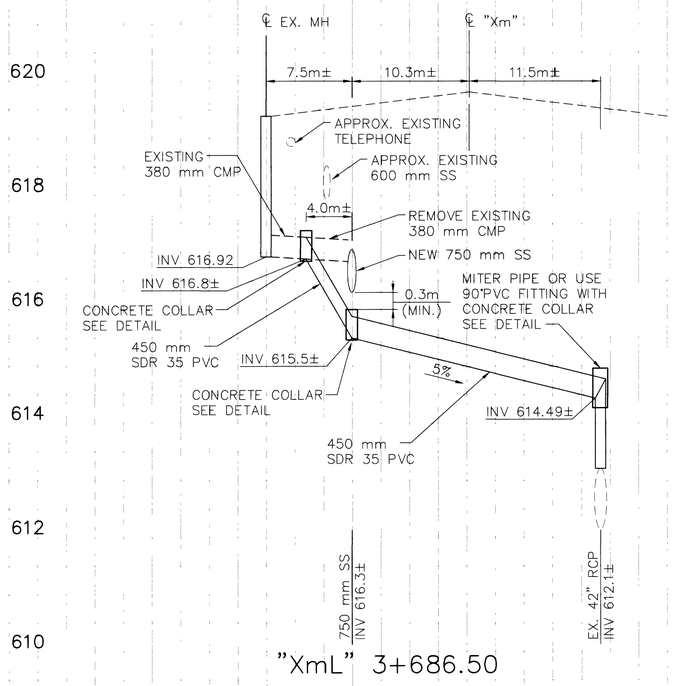

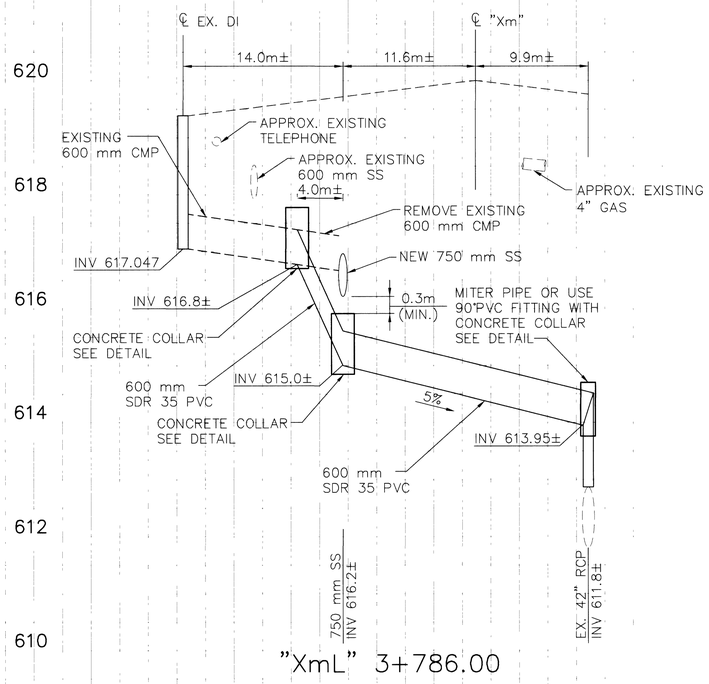

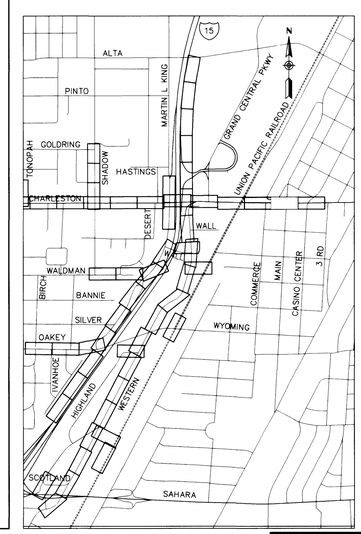

ISSUED FOR CONSTRUCTION **METRIC**

DATE	REVISIONS

PROJECT # 3160A
DESIGN BY
SCALE (V)
DATE DECEMBER 17, 1999
SCALE (H)
FLD. BK. # N/A

PARSONS BRINCKERHOFF
Las Vegas, Nevada

CITY OF LAS VEGAS NEVADA

DEPARTMENT OF PUBLIC WORKS

I-15 FREEWAY CHANNEL / CHARLESTON BLVD
MAIN ST. & COMMERCE ST.
INLET LATERAL RELOCATION

REGISTERED PROFESSIONAL ENGINEER JOHN P. CLARK CIVIL No. 11504 STATE OF NEVADA

DRAWING No. U-49
SHEET 241

327-V254

EXHIBIT -01.DWG CHANEMM 03\02\01 15: