NOTES
1. ALL 8" STL PIPE & FITTINGS TO HAVE CEMENT MORTAR LINING & COATING
2. CONCRETE TO BE 1/8" TO 1/4" BELOW FINAL STREET GRADE

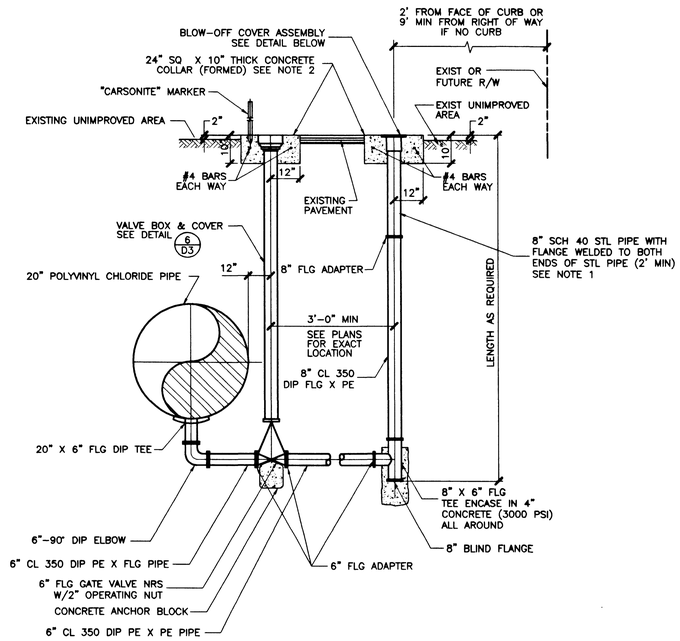

BLOW-OFF ASSEMBLY

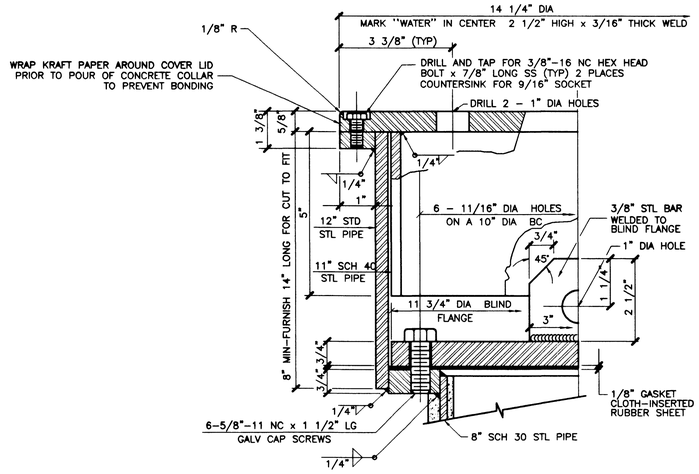

BLOW-OFF COVER

Avoid cutting underground utility lines. It's costly.
Call before you Dig
1-800-227-2600
UNDERGROUND SERVICE (USA)

Avoid overhead power line contact.
Call before you Overhead
1-702-593-6111
NEVADA POWER ENVIRONMENT SAFETY SERVICES DEPARTMENT

BLOW-OFF ASSEMBLY AND COVER DETAIL (1/-)

NOT TO SCALE

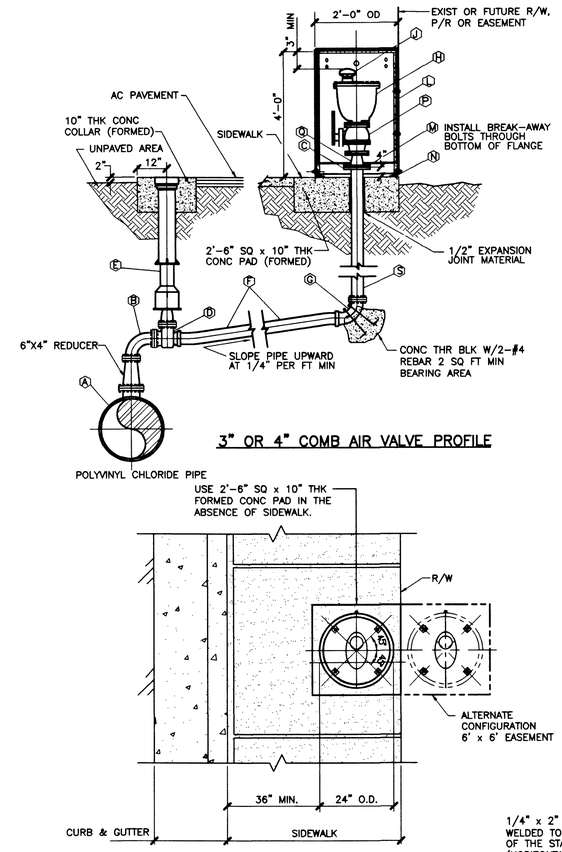

3" OR 4" COMB AIR VALVE PROFILE

NOTES
IN IMPROVED AREAS CONTRACTOR TO REPLACE FULL SIDEWALK PANEL.
IN UNIMPROVED AREAS CONTRACTOR TO CONSTRUCT FORMED 2'-6" SQ x 4" THICK CONCRETE SLAB.

LEGEND

- (A) 20" x 6" FLG DIP TEE
- (B) 4"- 90° FLG DUCTILE IRON BEND
- (C) 4" DUCTILE IRON FLANGE ADAPTOR
- (D) 4" FLG x PO OR FLG x MJ GATE VALVE W/2" OPERATING NUT
- (E) VALVE BOX & COVER - SEE DETAIL 6/D3
- (F) 4" DUCTILE IRON CL350 PIPE OR 4" PVC CL150 DR18 PIPE
- (G) 4" - 90° FLG x PO OR FLG x MJ CI BEND
- (H) 3" OR 4" COMBINATION AIR VALVE, FLANGED INLET
- (I) NOT USED
- (J) 3" OR 4" MUSHROOM FOR 4" OR 3" COMBINATION AIR VALVE ASSY
- (K) NOT USED
- (L) 2'-0" OD x 3'-6" HIGH STEEL COVER
- (M) 5/8"-11NC BREAK-AWAY ZINC PLATED HEX HD BOLT, HEX NUT AND LOCKWASHER
- (N) 1/2"-13NC x 2-1/2" LG "RED HEAD" ANCHOR BOLT INSTALLED INSIDE
- (O) NOT USED
- (P) 3" OR 4" BALL VALVE - QUARTER TURN - FOR 4" OR 3" COMB AIR VALVE ASSY
- (Q) 4" x 3" FLG DUCTILE IRON REDUCER - FOR 3" COMB AIR VALVE ASSY
- (R) NOT USED
- (S) 4" DUCTILE IRON CL350 PIPE

NOTE SEE SPECIFICATIONS FOR ALL APPROVED PRODUCTS

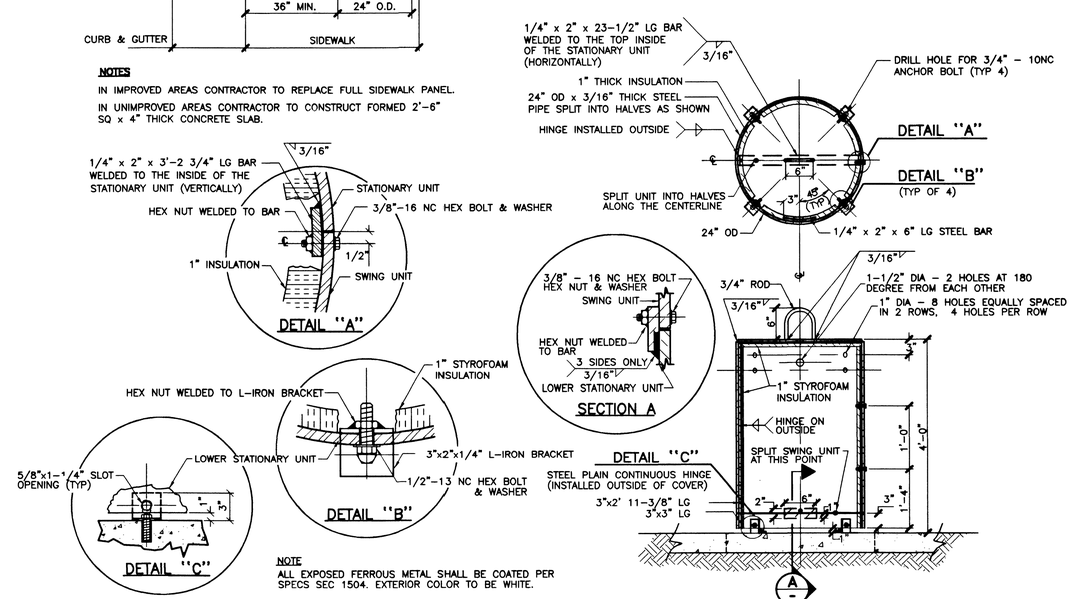

NOTE
ALL EXPOSED FERROUS METAL SHALL BE COATED PER SPECS SEC 1504. EXTERIOR COLOR TO BE WHITE.

COMBINATION AIR VALVE ASSEMBLY FOR 3" AND 4" VALVES (2/-)

NOT TO SCALE

APPROVED FOR CONSTRUCTION

LAS VEGAS VALLEY WATER DISTRICT DATE

REV	DATE	BY	REVISION

KB HOME
750 PILOT ROAD, SUITE F
Las Vegas, Nevada 89119
(702) 614-2500

vtn nevada
2727 SOUTH RAINBOW BOULEVARD LAS VEGAS, NEVADA 89146-5148
PH. (702) 873-7550 FAX (702) 362-2597
CONSULTING ENGINEERS ● PLANNERS ● LAND SURVEYORS

SHEET 20" WATER MAIN DETAILS LAS VEGAS, NEVADA

TITLE IRON MOUNTAIN RANCH HORSE DRIVE

DRAWN BY: DZM	SEPT 2001	SCALE:	NA	NA
DESIGNED BY: CRG/DZM	SEPT 2001		HORIZ.	VERT.
CHECKED BY: DRB	SEPT 2001			
PROJECT NO: 6001				

SEAL
PROFESSIONAL ENGINEER KENNETH F. NICHOLSON CIVIL No. 10539 STATE OF NEVADA 4-7-02

SHEET D2
9 OF 10 SHEETS

DRAWING NO. 1087-4604-H20

39963

H:\5825\5825-X\6001-D1.DWG Apr 03, 2002 - 10:44am -davem

T:\5825\5825-X-D1.DWG