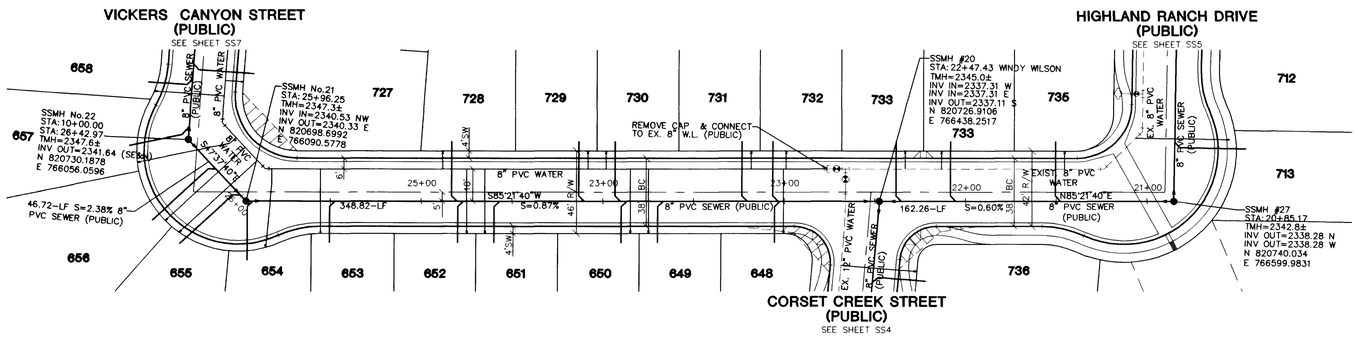

LONE WOLF AVENUE
(PUBLIC)

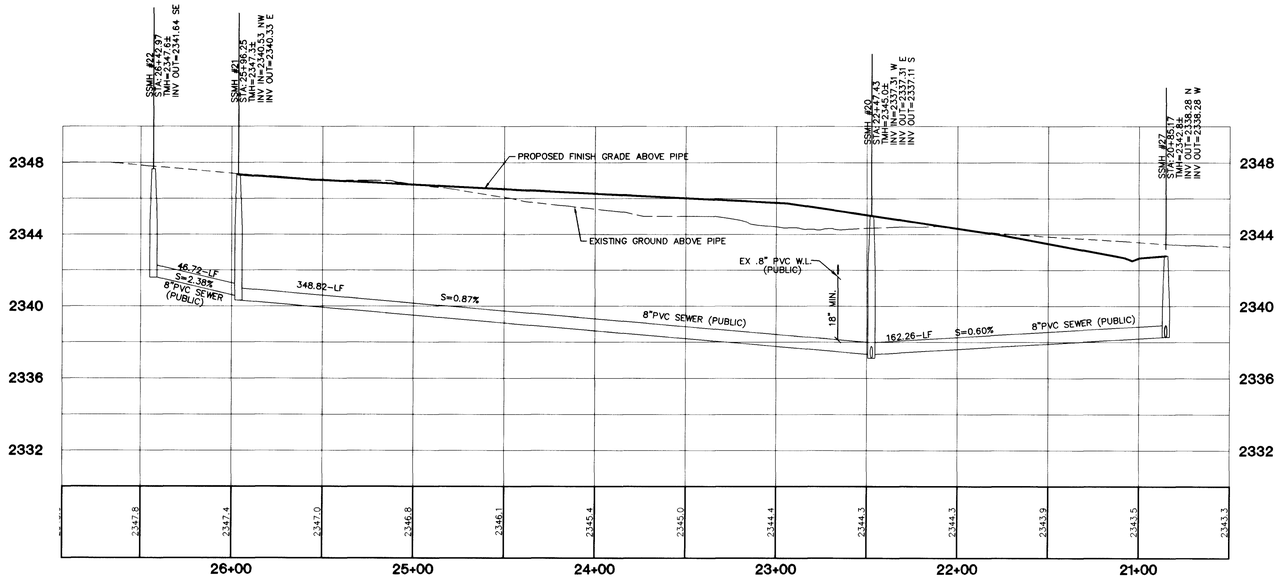

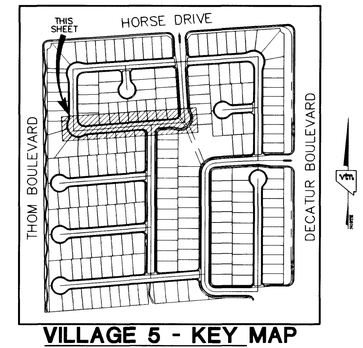

VILLAGE 5 - KEY MAP
NOT TO SCALE

PROFILE SCALE:
HORIZ. 1" = 40'
VERT. 1" = 4'

GRAPHIC SCALE
40 0 20 40 80
1" = 40'

DISCLAIMER NOTE

UTILITY LOCATIONS SHOWN HEREON ARE APPROXIMATE ONLY. IT SHALL BE THE CONTRACTOR'S RESPONSIBILITY TO DETERMINE THE EXACT HORIZONTAL AND VERTICAL LOCATION OF ALL EXISTING UNDERGROUND AND OVERHEAD UTILITIES PRIOR TO COMMENCING CONSTRUCTION. NO REPRESENTATION IS MADE THAT ALL EXISTING UTILITIES ARE SHOWN HEREON. THE ENGINEER ASSUMES NO RESPONSIBILITY FOR UTILITIES NOT SHOWN OR UTILITIES NOT SHOWN IN THEIR PROPER LOCATION.

PROJECT BENCHMARK

PROJECT DATUM: NAVD88

(OLD) CITY OF LAS VEGAS BENCHMARK 1LV90-13NES
NAVD88 ELEVATION: 710.9608 METERS (2332.54 FEET)
PROJECT DESIGNED USING OLD BENCHMARK

(NEW) CITY OF LAS VEGAS BENCHMARK 1LV90-13NES
NAVD88 ELEVATION: 710.9181 METERS (2332.40 FEET)

(-0.14 FEET) TO GET NEW PUBLISHED DATUM

CNLV BM 413148, NAVD 88 ELEV=710.953 METERS (2332.52 FEET) 1" DIAMETER CONCRETE MONUMENT 77 FEET SOUTH & 54 FEET WEST OF N.E. CORNER SEC. 13T19R60E 10' EAST OF LARGE POWER POLE.

BASIS OF BEARINGS

THE BASIS OF BEARINGS FOR THIS PROJECT IS GRID NORTH AS DEFINED BY THE NEVADA COORDINATE SYSTEM OF 1983 (NCS83), EAST ZONE (2701) DETERMINED BY CLARK COUNTY GIS CONTROL POINTS 802, 803, 804 AND 805, AS SHOWN ON A RECORD OF SURVEY ON FILE N THE CLARK COUNTY, NEVADA, RECORDER'S OFFICE, IN BOOK 88 OF SURVEYS, AT PAGE 53.

Avoid cutting underground utility lines. It's costly.
Call before you Dig
1-800-227-2600

Avoid overhead power line contact. It's costly.
Call before you Overhead
1-702-593-6111

REV	DATE	BY	REVISION
7			
6			
5			
4			
3			
2			
1			

CITY OF LAS VEGAS

KB HOME
750 PILOT ROAD, SUITE F
LAS VEGAS, NV 89119
(702) 614-2500

2727 SOUTH RAINBOW BOULEVARD LAS VEGAS, NEVADA 89146-5148
PH. (702) 873-7550 FAX (702) 362-2597
nevada CONSULTING ENGINEERS ● PLANNERS ● LAND SURVEYORS

SEWER PLAN & PROFILE
LONE WOLF AVENUE
STA: 20+85.17 - 26+42.97

IRON MOUNTAIN RANCH
VILLAGE 5
UNIT 2

DRAWN BY: RMS — SEPT. '02
DESIGNED BY: RMS — SEPT. '02
CHECKED BY: KPN — SEPT. '02
PROJECT NO: 5919-2 — SCALE: 1"=40' HORIZ. 1"=4' VERT.

PROFESSIONAL ENGINEER — KENNETH P. NICHOLSON — CIVIL — No. 10539 — STATE OF NEVADA
EXPIRES 12-31-03

SHEET
SS1
15 OF 23 SHEETS

DRAWING NO.
3074-4664-5-2

H:\5407\VILLAGE5\UNIT2\5919SS02.DWG(SS1)

47231