PIG INFORMATION

MAKE	STYLE	CONDITION

FOR STEEL ONLY

Pipe to Soil _____

ANODE INSTALLED?

☐ YES ☐ NO

IF YES, PIPE TO SOIL _____

TYPE OF PIPE COATING

2 ☐ Tar Wrap
3 ☐ Asphalt
4 ☐ Pritec
5 ☐ Fusion Bonded Epoxy
6 ☐ Plastic Tape Wrap
7 ☐ Extruded Poly Coating
8 ☐ Other _____

CONDITION OF PIPE COATING

E ☐ Excellent
G ☐ Good
F ☐ Fair
P ☐ Poor
N ☐ No Coating

CONDITION OF PIPE

	If Exposed. External	If Cut or Coupon Internal
EG	☐ Good	☐ IG
ESC	☐ Slight Corrosion	☐ ISC
EG	☐ Heavy Corrosion	☐ IHC

VALVE SHEET REQUIRED

YES ☐ NO ☐

CP/PIPE SOIL READ REQUIRED

LMR# _____

SIGNATURES _____

MSA- _____

DESIGN LOAD: _____ CFH @ 5# _____

SX#: _____

WELD PROCEDURES USED:

Signature _____
Date _____

CALL BEFORE YOU DIG
CAN YOU DIG IT!
1-800-227-2600
(48Hrs. Advance Notice Required)

FIVE TERMINAL TEST STATION
(TO BE INSTALLED OUTSIDE FLOW OF TRAFFIC)

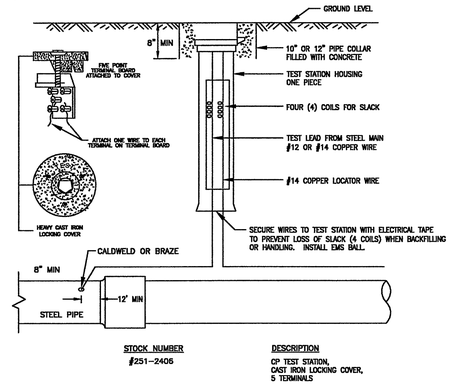

VICINITY MAP
N.T.S.

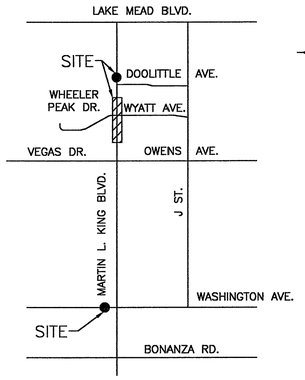

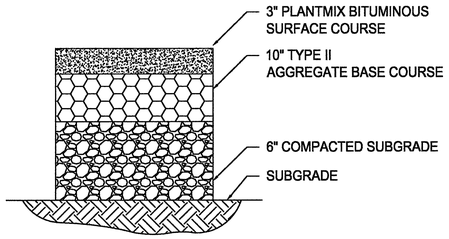

TOTAL THICKNESS = 15"

MINOR RESIDENTIAL SIDE STREET NEW PAVEMENT SECTION

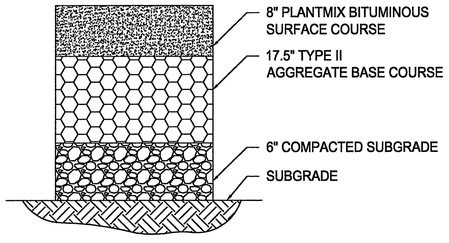

TOTAL THICKNESS = 31.5"

TYPICAL PAVEMENT SECTION
(MARTIN L. KING, WASHINGTON)

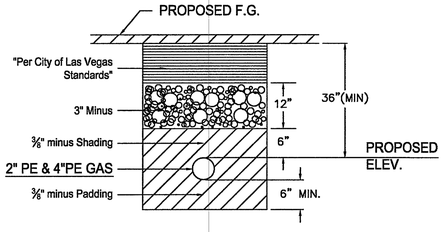

CITY OF LAS VEGAS TRENCH DETAIL
FOR IMPROVED AREA

PURGE PLAN WAS COMPLETED IN ACCORDANCE WITH THE OPERATIONS MANUAL GUIDELINES BY:

PRINT: _____ DATE: _____
SIGNATURE: _____

TOTAL FOOTAGE LOCATED IN PUBLIC ROW 1109'

APPROVED FOR CONSTRUCTION

THIS APPROVAL IS FOR WORK IN CLV R/W OR CLV EASEMENTS ONLY. OBTAINING PERMISSIONS OR EASEMENTS FOR WORK SHOWN ON PRIVATE PROPERTY IS THE RESPONSIBILITY OF THE UTILITY.

for CLV CITY ENGINEER — DATE 6-14-07

CONSTRUCTION NOTES

1. SUGGESTED GAS LOCATIONS ARE TO CLEAR SUBSTRUCTURES. LOCATE IN FIELD.
2. GAS MAINS SHALL BE PURGED PER OPERATIONS MANUAL.
3. ALL PIPELINE CONSTRUCTION SHALL CONFORM TO APPLICABLE JURISDICTION SPECIFICATIONS.
4. DO NOT SCALE THIS DRAWING.
5. NOTIFY ENGINEERING PRIOR TO ANY DESIGN CHANGES.
6. PURGE ABANDONED LINES ACCORDING TO SWG OPERATIONS MANUAL.
7. CITY OF LAS VEGAS PERMIT REQUIRED.
8. TUNNEL UNDER EXISTING CONCRETE IMPROVEMENTS, DO NOT CUT, PROTECT IN PLACE.
9. SWG PAVEMENT REPAIR TO BE COLD MIX IN AREAS OF STREET RECONSTRUCTION (ALL OF WASHINGTON AND MLK SWG WORK AREAS) AND MAINTAINED BY CONTRACTOR. CONTRACTOR SHALL CALL ENGINEERING PRIOR TO ANY REQUEST TO UPGRADE FROM COLD MIX PAVING. IN AREA EAST OF CLV PAVING LIMIT ON WYATT AVE., PAVEMENT REPAIR TO BE HAND PATCHED.
10. ALL NEW PIPE IN R/W OF WASHINGTON AVE. AND IN MARTIN LUTHER KING BLVD. SHALL BE INSTALLED WITH MINIMUM OF 4 FT OF COVER.
11. INSTALL 5 TERMINAL C.P. TEST STATION WITH CONCRETE COLLAR. **IT IS MANDATORY THAT CONSTRUCTION BE PRESENT WHEN TEST STATION IS INSTALLED.** CALL TECHNICAL SERVICES AT 365-2391 A MINIMUM OF 24 HOURS IN ADVANCE TO SCHEDULE.
12. USE (1) 2" PE BY-PASS. IF PRESSURE FALLS BELOW 30PSIG, ADD 2ND 2" PE BY-PASS AND CONTACT ENGINEERING.
13. REPLACE GRASS AS NECESSARY AT MARBLE MANOR COMPLEX.
14. INSTALL 5 TERM LOCATION TEST STATION ON 5' PE STUB WITH CONCRETE COLLAR. SEE SWG INSPECTOR FOR EXACT LOCATION.
15. BACK OF SIDEWALK IS NOT R/W ON WYATT OR DOOLITTLE. DIMENSION GAS PIPE FROM CURB AND CENTERLINE OF STREET THESE STREETS AS NECESSARY.
16. ALL STREETS ARE PUBLIC.

LEGEND

- Proposed gas main
- Existing gas main
- Right of way
- CURB / GUTTER

L07V9655-SWG-PH3

NO.	DESCRIPTION	BY	DATE	APPVD.

REVISIONS

SOUTHWEST GAS CORPORATION

103352

3760601	3/4" PVC		68'			
3760202	2" STL		22'			
3760602	2" PVC		677'			
3760104	4" PE	915'	205'			
3760102	2" PE	254'	24'			
3760101	1" PE	20'				
UNIT NO.	UNIT TYPE	INSTL.	RET.	INSTL.	RET.	
		PROPOSED		COMPLETED		

PROPERTY UNITS

AS-BUILT DRAWING-PRESSURE TEST DATA

PIPE DIA. _____ TEST MEDIUM: ☐ AIR ☐ NITROGEN ☐ WATER ☐ SOAP — TEST METHOD: ☐ GAUGE ☐ CHART
PIPE LENGTH _____
PIPE TYPE _____
MIN. DURATION _____ GAUGE/ PRESS REC SN#

	START	END
TEST PRES. (PSIG)		
TIME		
DATE		
PERFORMED BY		

VISUAL INSPECTION CERTIFICATION

I HAVE VISUALLY INSPECTED ALL HEATED FUSIONS, SOLVENT CEMENT, MECHANICAL JOINTS, AND WELDS THAT I HAVE PERFORMED

NAME _____ DATE _____

AS-BUILTS ACCEPTED BY _____ DATE _____
POSTED BY _____ DATE _____
POSTING QC'D BY _____ DATE _____

CONSTRUCTION

INSPECTOR _____
FOREMAN _____
REVIEWED BY _____

PERMIT INFORMATION
CITY OF LAS VEGAS

TAX CODE
02-0200
02-0204

ISOLATION AREA	W. R. NO.
92	593452
LOCATION	ATLAS #/TILE #
S21 T20S-R61E S28 T20S-R61E	x624y520 x624y524

ENGINEER/TECHNICIAN: BOB MIDDAG — PHONE: (702) 365-2071
ACCOUNT REP.: — PHONE:
PROJECT CONTACT: JOE CHRISTENSEN — PHONE: (702) 229-2212
SHEET NO. 2 OF 4 — SCALE: 1" = 40' — DATE: 04/25/07
DWN. BY: — CHKD. BY: — APPVD. BY:

TITLE
F CLV MARTIN L. KING BLVD. IMPROVEMENTS PHASE III
WASHINGTON AVE. / WYATT AVE. / DOOLITTLE AVE.