FED. ROAD REG NO	STATE	PROJECT NO.	COUNTY	CONTROL SECTION	STATE ROUTE	SHEET NO.	TOTAL SHEETS
7	NEVADA						

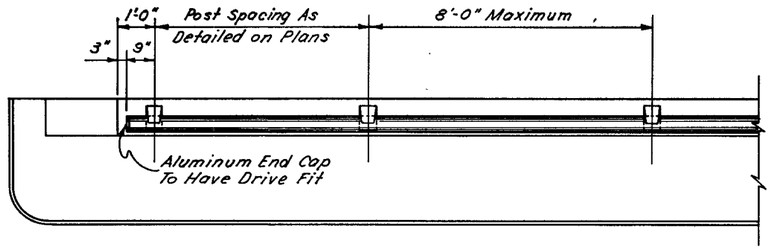

PART PLAN

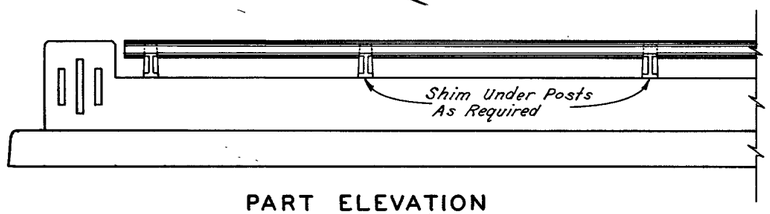

PART ELEVATION

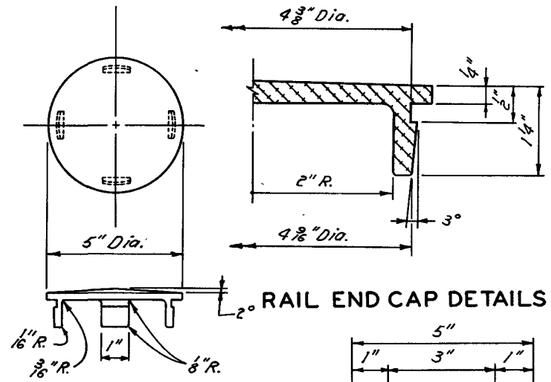

RAIL END CAP DETAILS

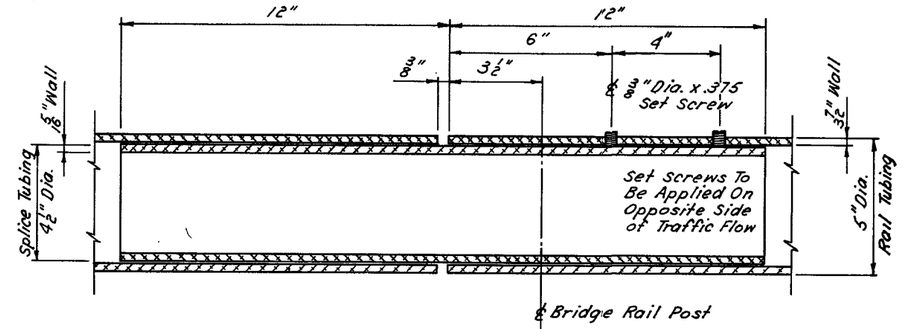

INSIDE SPLICE DETAIL

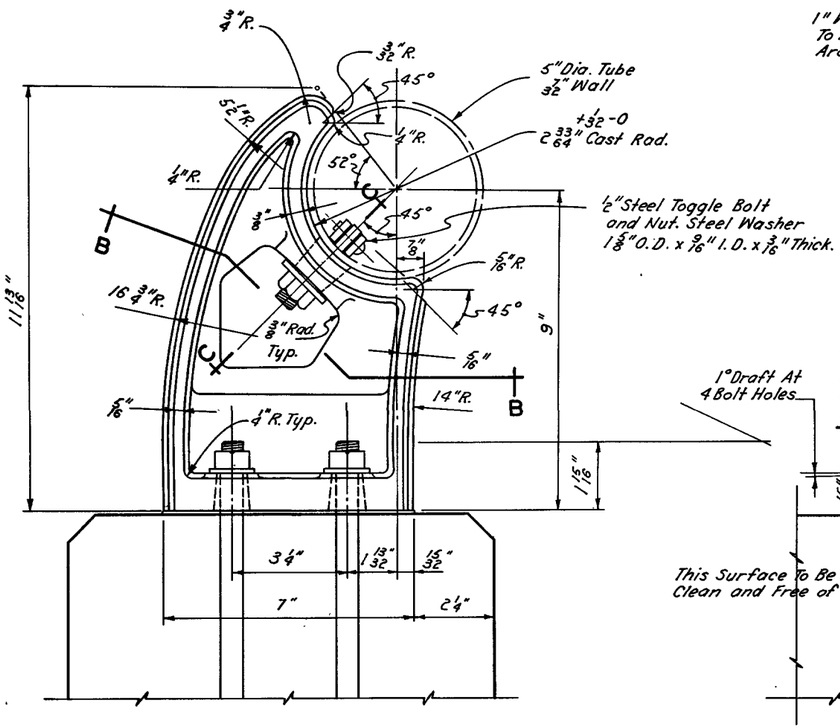

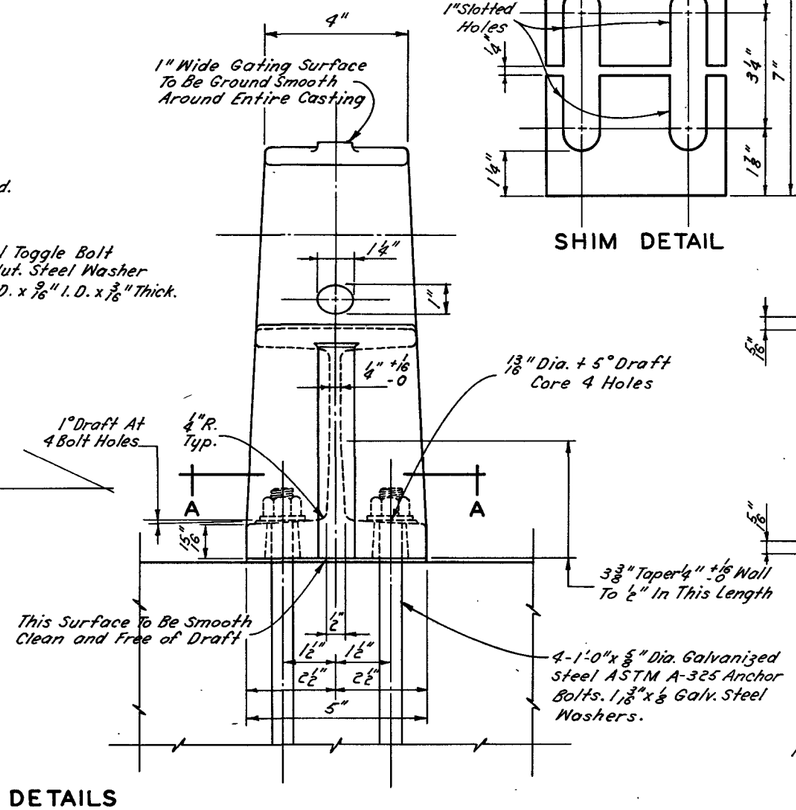

RAILING DETAILS

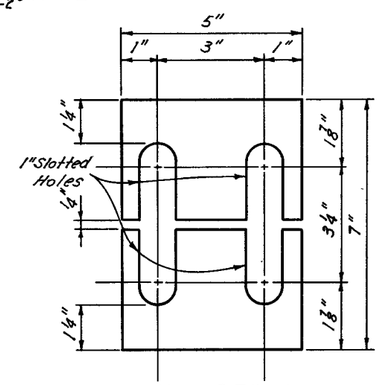

SHIM DETAIL

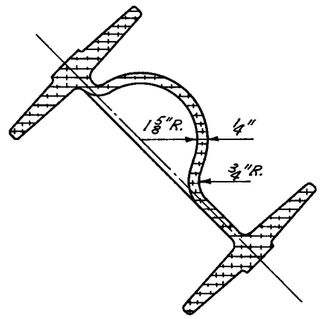

SECTION B-B

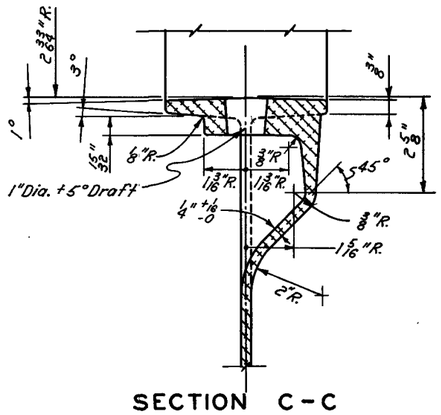

SECTION C-C

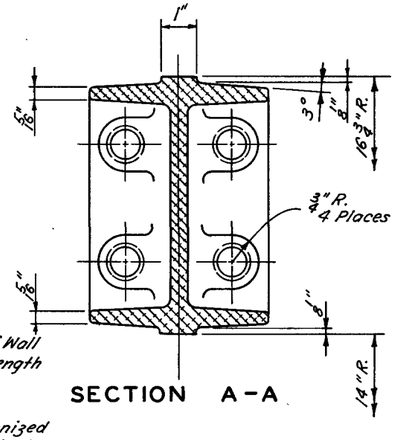

SECTION A-A

GENERAL NOTES

1. Railing To Conform To Vertical and Horizonal Alignment.
2. Joint To Be Placed 25'-0" Center To Center, Max.
3. Slip Joint To Be Placed in Panels To Match Joints in Deck and Curb. The 3/8" For Movement Will Be Changed To Match Allowances For Movement in The Deck and Curb.
4. Design Weight: 6 1/4 Lbs. Per Foot.

NOTE:
Unless Otherwise Specified All Draft to be 3°

All Unmarked Radii To Be 1/8" R.

107 V 3834

STATE OF NEVADA
DEPARTMENT OF HIGHWAYS

107

STANDARD BRIDGE RAIL
TYPE H (66)
ALUMINUM

APPROVED BY: [illegible]

59341