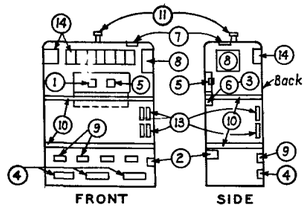

TYPE M CABINET

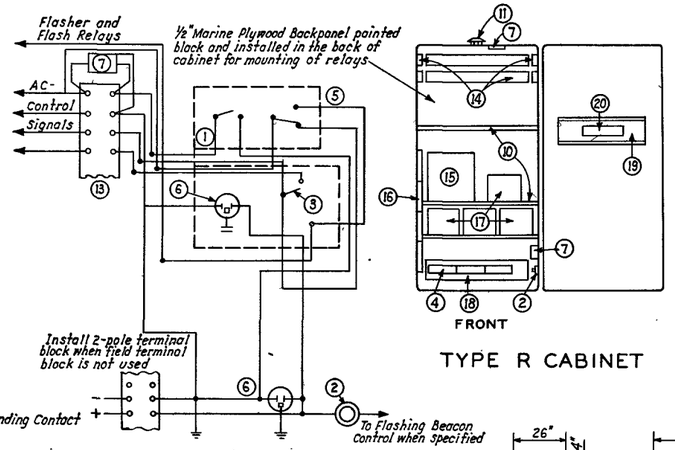

TYPE R CABINET

CABINET WIRING

1. Main Switch
2. Plug Fuse
3. Controller-Flash-Signal-Switch
4. Field Wire Terminal Blocks
5. Auxiliary Door Flash Switch
6. N.E.M.A. Standard Plug Receptacle with Grounding Contact
7. Radio Interference Suppressor
8. Flasher
9. External Light Relays
10. Shelf
11. Thermostat-Controllet Fan with T Vent
12. Eight ½" Screened Vent Holes
13. Instrument Terminal Strip
14. Control Relays
15. Dispatcher Unit
16. Internal Interconnect Terminal Strips
17. Minor Movement Units
18. Slant Panel
19. Police Panel
20. Internal Power Panel and Recall Switches for Minor Movements

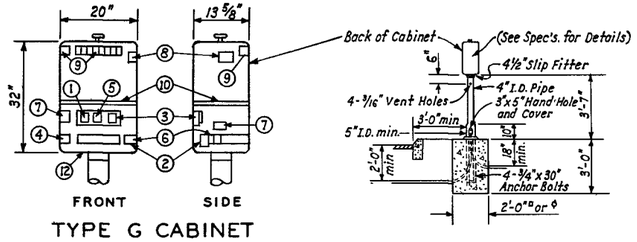

TYPE G CABINET

TYPE G CABINET

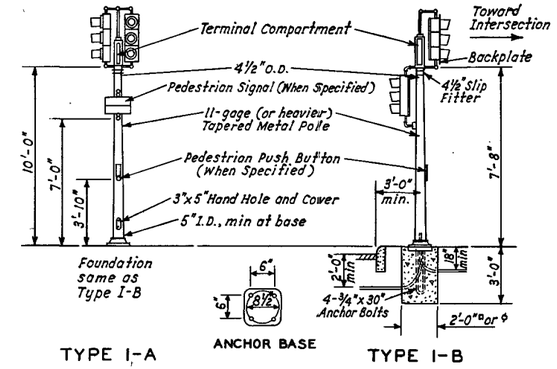

SIGNAL STANDARDS

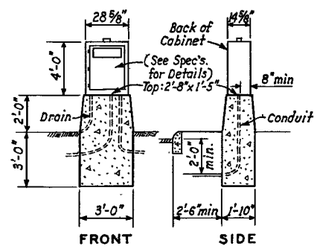

TYPE M CABINET

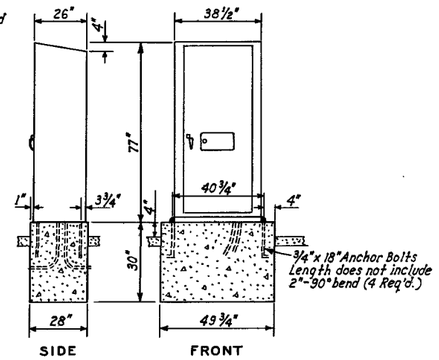

TYPE R CABINET

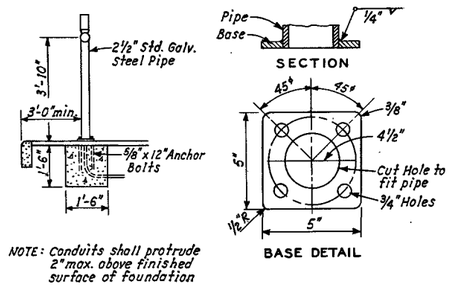

PEDESTRIAN PUSH BUTTON POST

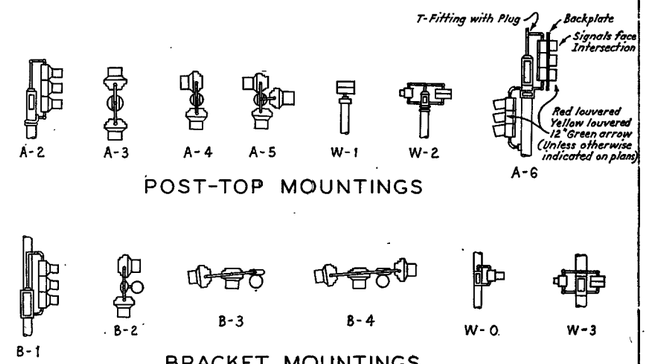

POST-TOP MOUNTINGS

BRACKET MOUNTINGS

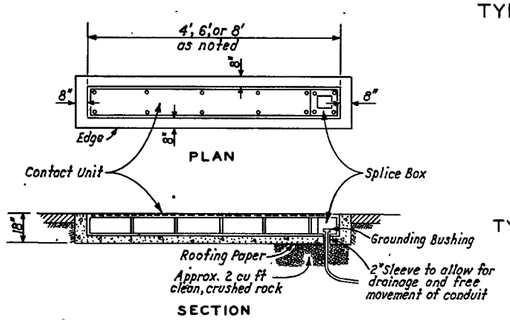

PRESSURE DETECTOR

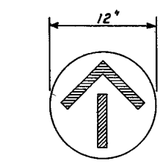

TYPICAL ARROW LENS

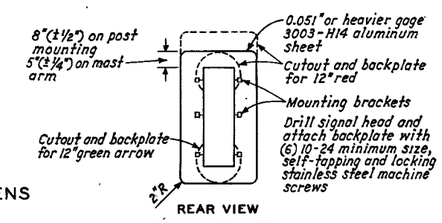

BACK PLATE

NOTE: No background light to show between plate and head

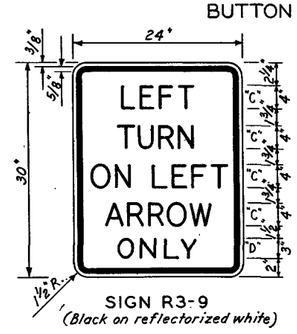

SIGN R3-9
(Black on reflectorized white)

(For 3 Light Signal) (For "Walk" Signal)

1. Arrow to be left or right or both as required.
2. Porcelain enameled, 9"x12" sign, black letters on white background.

PEDESTRAIN PUSH BUTTON SIGN

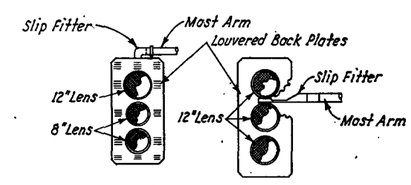

M-1
Top Mounted

M-2
Side Mounted Slip Fitter
(Use only when noted on Plans)

MAST ARM MOUNTING

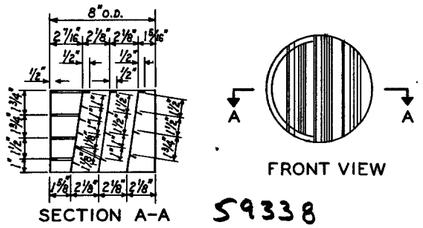

SECTION A-A

FRONT VIEW

59338

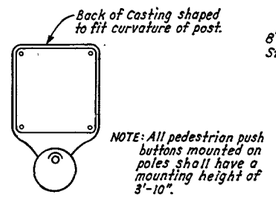

PEDESTRIAN PUSH BUTTON

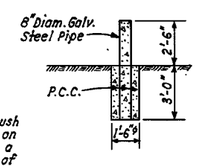

TYPICAL GUARD POST

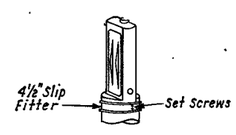

TERMINAL COMPARTMENT

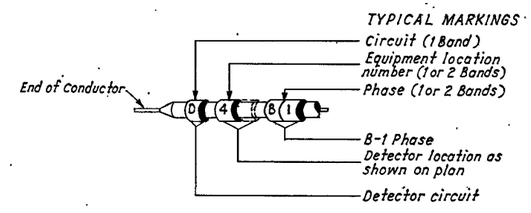

TYPICAL BANDING OF CONDUCTOR ENDS

107V3834

STATE OF NEVADA
DEPARTMENT OF HIGHWAYS

104

LIGHTING AND SIGNALS
STANDARD DETAILS