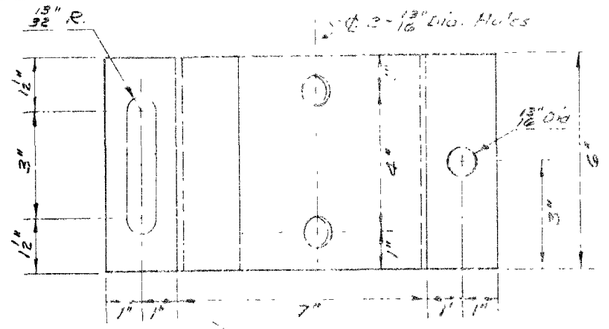

TOP PLATE

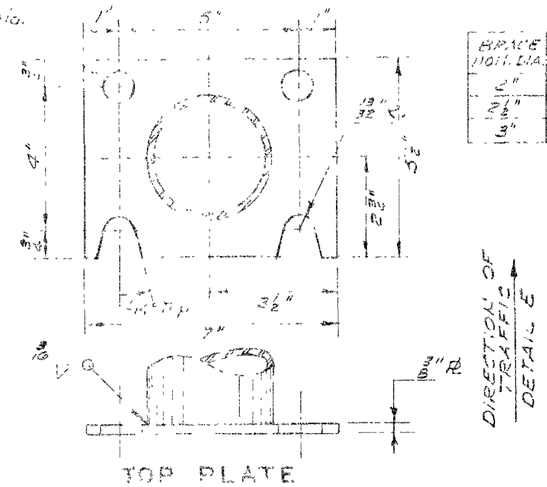

TOP PLATE

BR. 1'-6" HOLE DIA.	BR RADIUS
2"	7/16"
2½"	1/2"
3"	1¼"

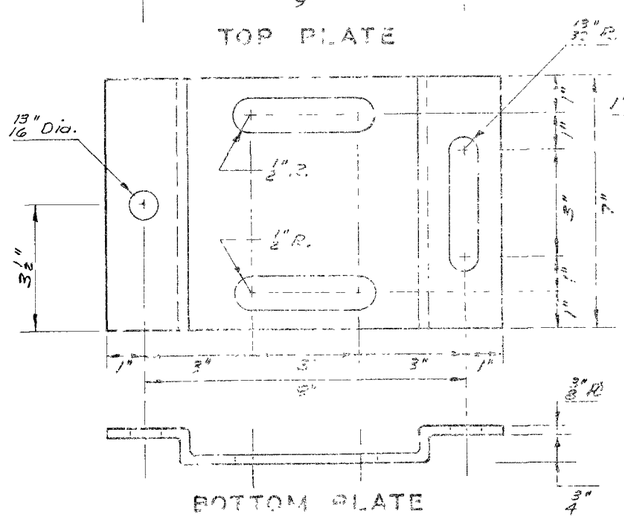

BOTTOM PLATE

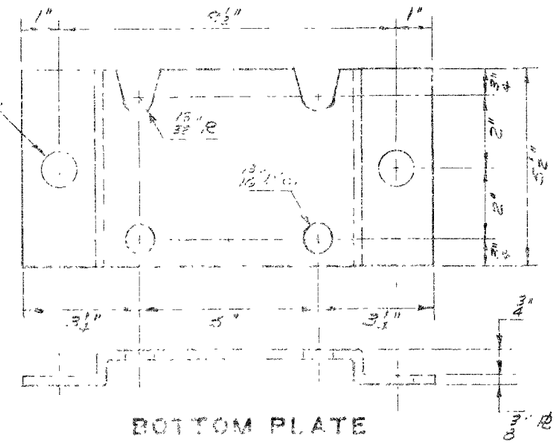

BOTTOM PLATE

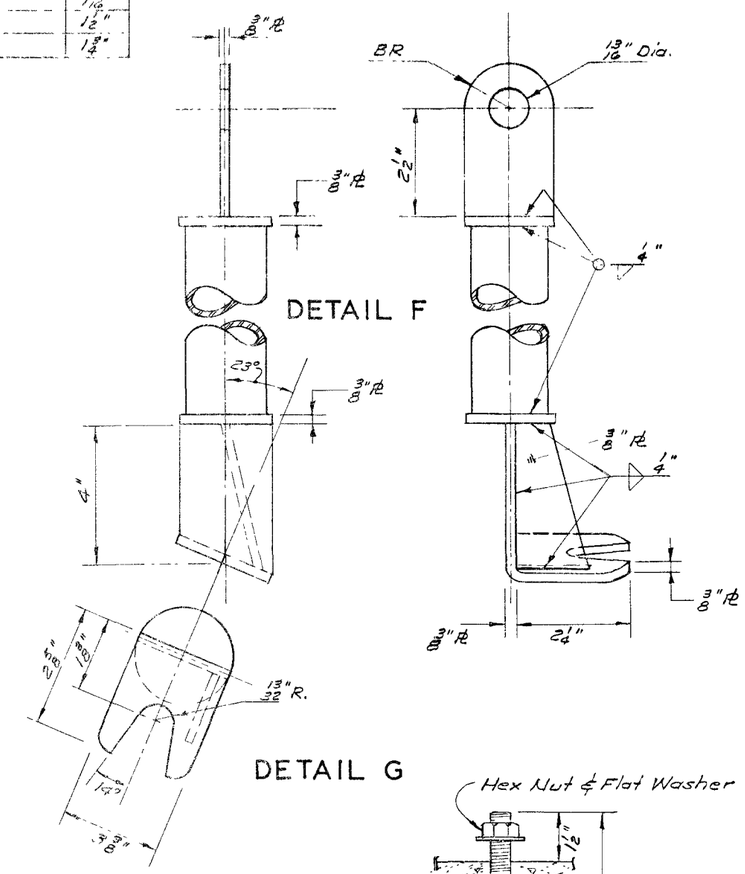

DETAIL F

DETAIL G

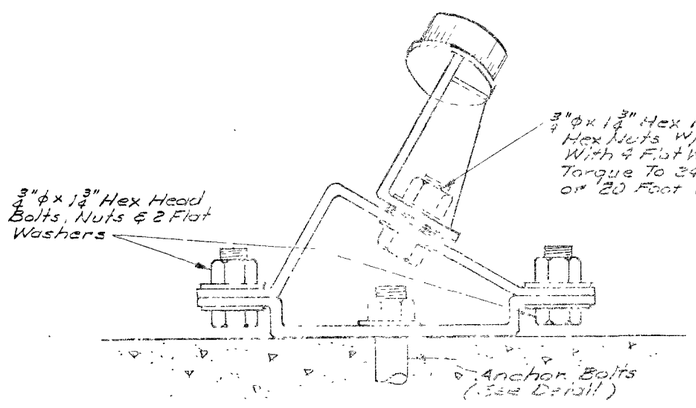

ASSEMBLY

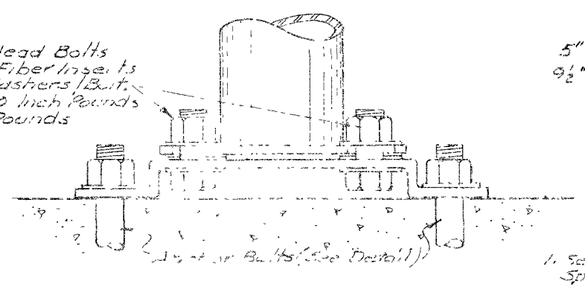

ASSEMBLY DETAIL E

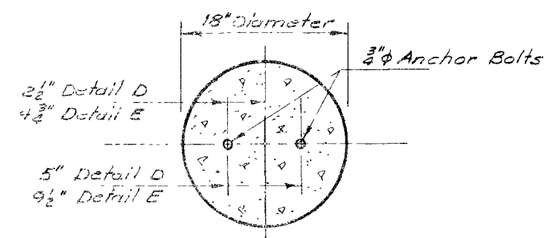

PLACEMENT

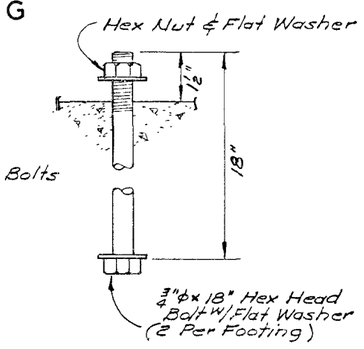

DETAIL

ANCHOR BOLTS 107V3833

GENERAL NOTES

1. See Special Provision For Materials Specifications Not Given.
2. Flat Washers Required As Shown.

167

STATE OF NEVADA
DEPARTMENT OF HIGHWAYS

STANDARD GROUND MOUNTED SIGN SUPPORTS

~~S-2019~~ 59067