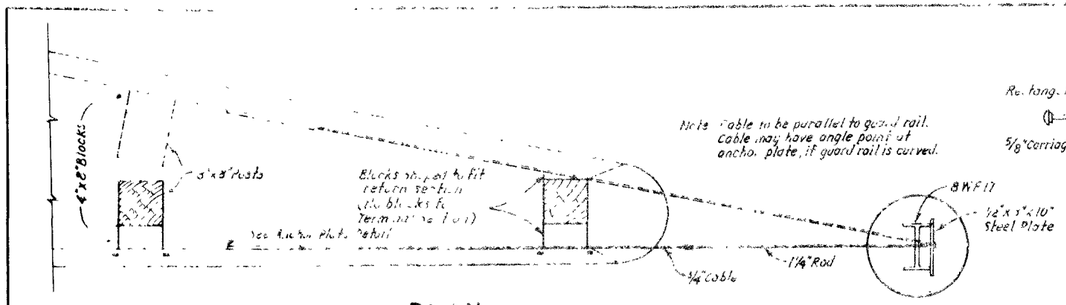

PLAN

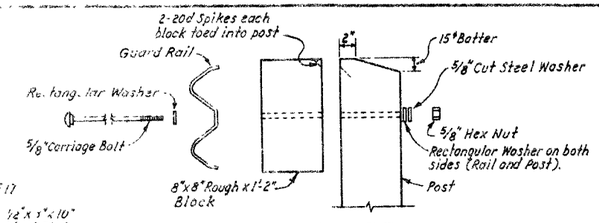

POST BOLT HARDWARE
(Galvanized)

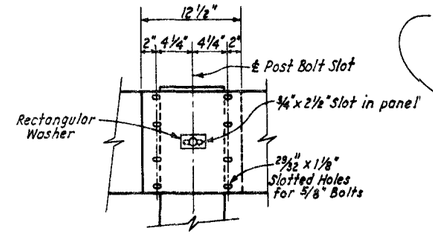

RAIL SPLICE

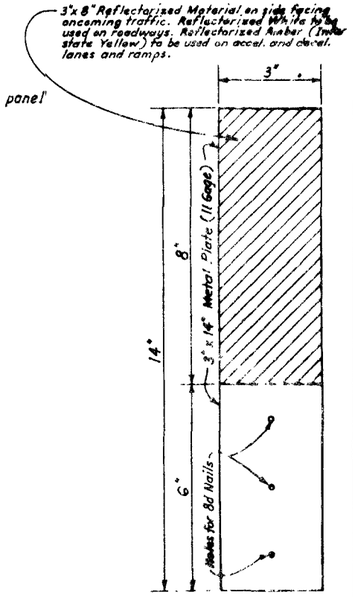

REFLECTOR PLATE DETAIL

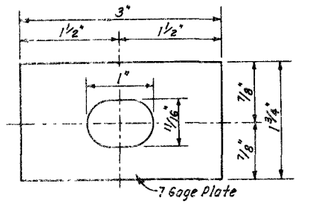

RECTANGULAR POST BOLT WASHER
(Galvanized)

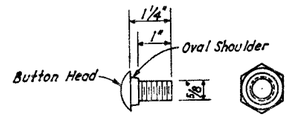

NOTE: Post bolt similar except length.

BOLT & NUT

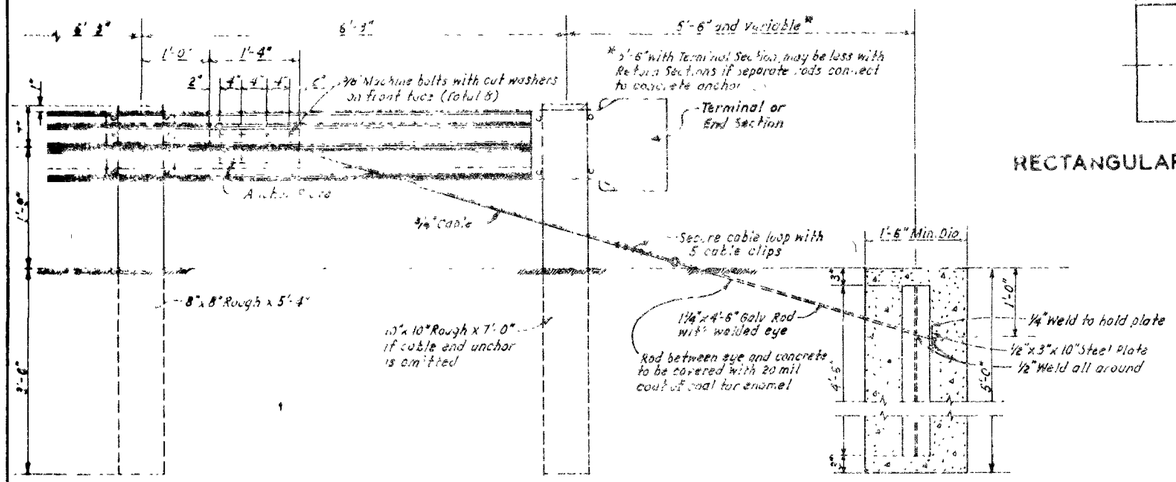

ELEVATION

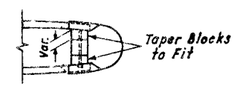

PLAN

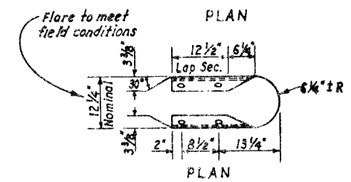

PLAN

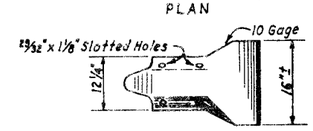

ELEV.

TERMINAL RETURN SECTION
(To be lapped in direction of traffic).

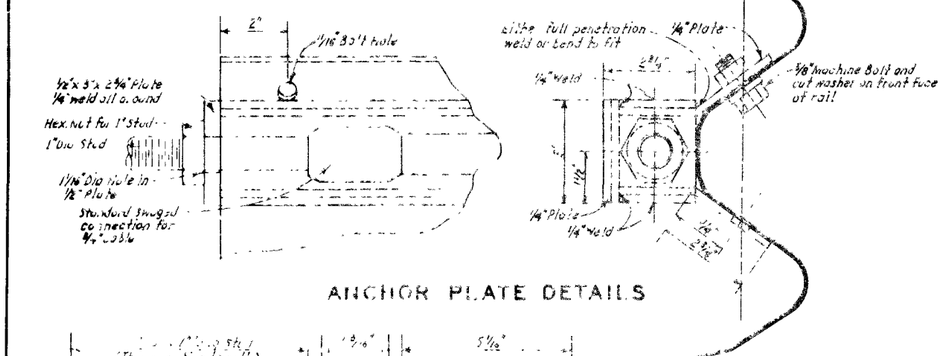

ANCHOR PLATE DETAILS

~~Bolts~~ STANDARD SWAGED FITTING AND STUD
S9061 CABLE END ANCHOR

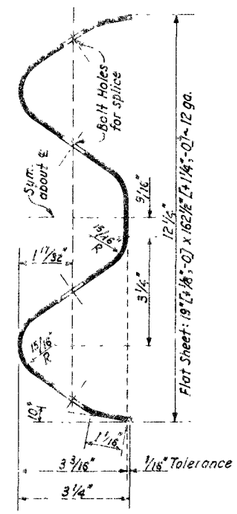

SECTION THRU RAIL ELEMENT

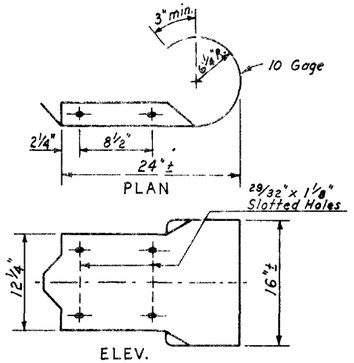

ELEV.

TERMINAL SECTION

GENERAL NOTES

1- Rail elements shall be furnished shop curved for radius of 150 feet or less.

2- Post spacing shall be 6'-3" center to center except as noted.

3- Rail splices and terminal sections shall be lapped in direction of traffic.

4- Direction of traffic indicated by arrow: [TRAFFIC]

107V 3833

161

STATE OF NEVADA
DEPARTMENT OF HIGHWAYS

GUARDRAIL AND CABLE END ANCHORS

CHIEF ROAD DESIGN ENGR.

R-811 - S18
ADOPTED 1/69
REVISION