FED. ROAD REG NO	STATE	PROJECT NO	COUNTY	CONTROL SECTION	STATE ROUTE	SHEET NO.	TOTAL SHEETS
7	NEVADA	I-015-1(31)41	CLARK	03-083		103	

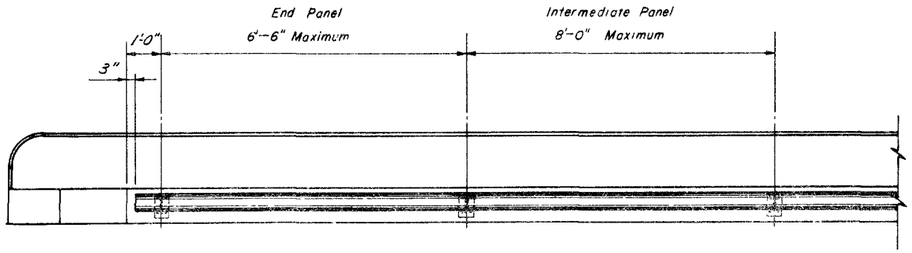

PART PLAN

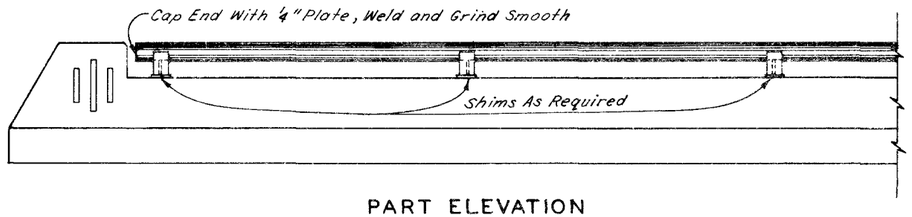

PART ELEVATION

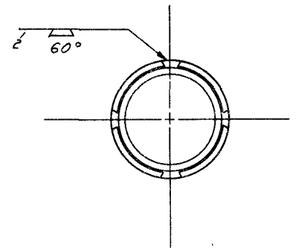

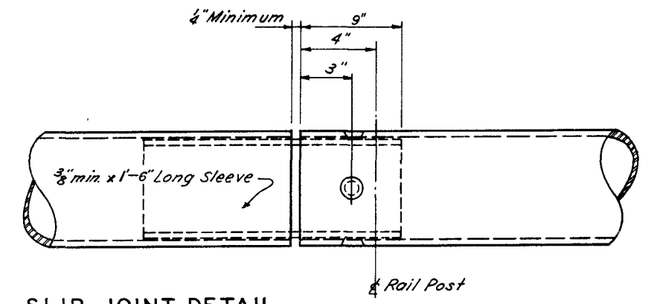

SLIP JOINT DETAIL

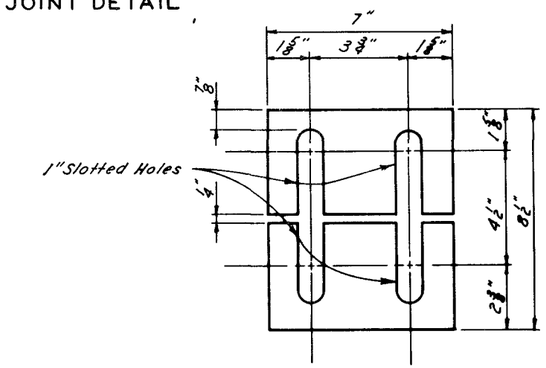

SHIM DETAIL

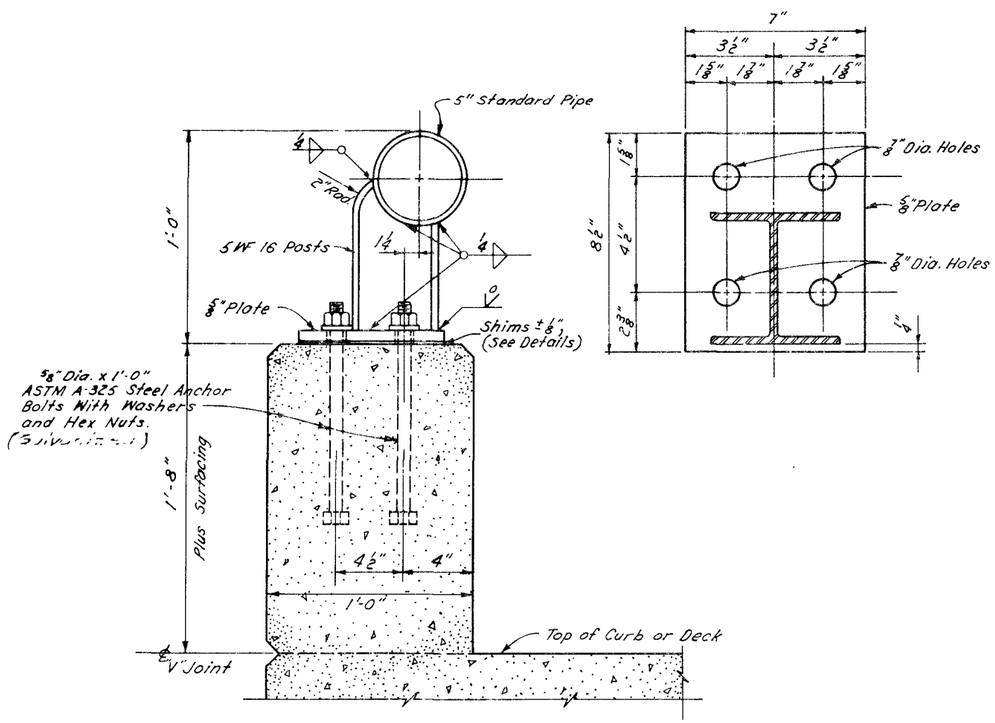

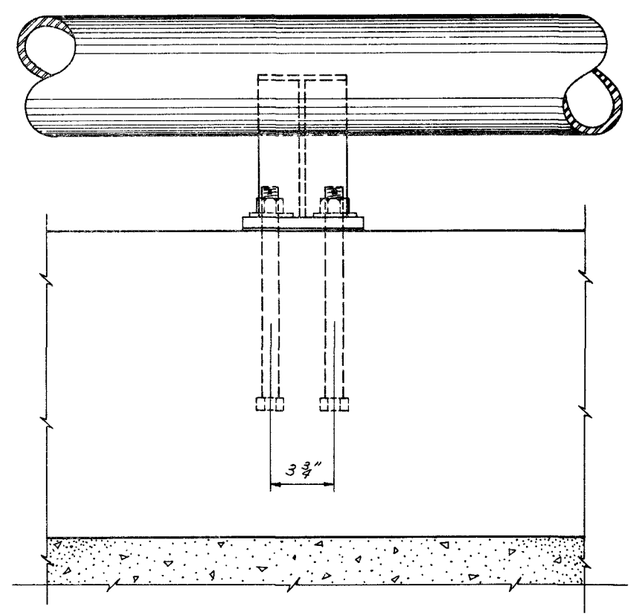

RAILING DETAILS

—GENERAL NOTES—

1. Railing to conform to vertical and horizontal alignment.
2. Joints to be spaced 40'-0" center to center, maximum.
3. Slip Joints to be placed in panels to match expansion joints in deck, the ¼" for movement will be changed to match allowance for movement in the deck and curb.
4. Design Weight: 17 lbs. per ft.

107V 3833

STATE OF NEVADA
DEPARTMENT OF HIGHWAYS

103

STEEL BRIDGE RAIL
TYPE "H"

5900B