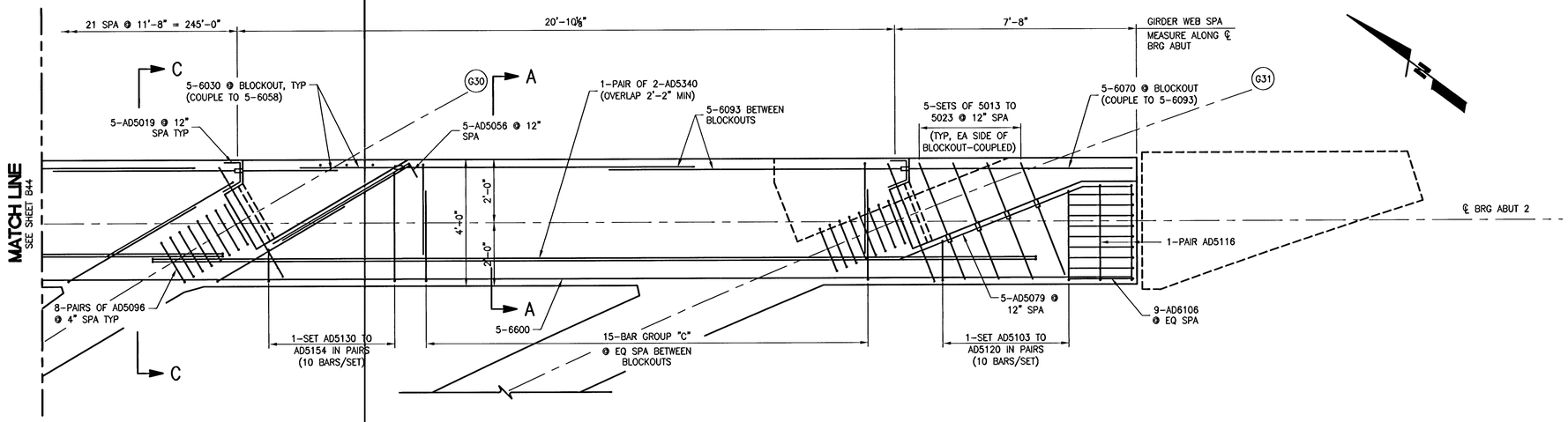

PARTIAL PLAN

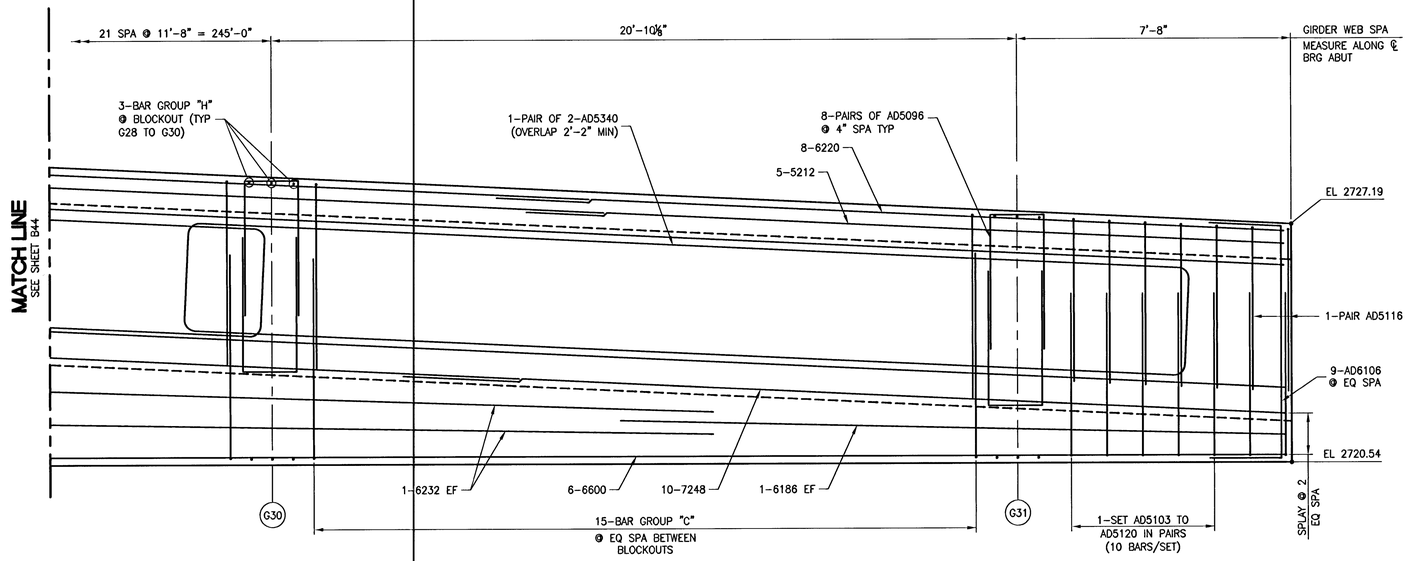

PARTIAL ELEVATION

(LOOKING BACK STATION)

MINIMUM BAR LAPS:

NO. 4 BAR TO NO. 4 BAR = 1'-8"
NO. 5 BAR TO NO. 5 BAR = 2'-2"
NO. 6 BAR TO NO. 6 BAR = 2'-7"
NO. 7 BAR TO NO. 7 BAR = 3'-3"
NO. 8 BAR TO NO. 8 BAR = 4'-3"

114632

NOTE:

1. FOR SECTIONS A-A, B-B & C-C SEE SHEET B46

I-2896

REV	DATE	BY	REVISION

PUBLIC WORKS DEPARTMENT
400 E. STEWART AVE.
LAS VEGAS, NV 89101
702-229-6272

CITY OF LAS VEGAS, NV

R2H ENGINEERING, INC.
CONSULTING STRUCTURAL ENGINEERS
840 GINER DRIVE, SUITE 320 • LAS VEGAS, NEVADA • 89119
PHONE: (702) 260-7000 • FAX: (702) 260-7070

HORSE DRIVE OVER US-95
ABUTMENT DIAPHRAGM 2
PLAN & ELEVATION 7

HORSE DRIVE / US 95 INTERCHANGE

DESIGNED BY: R. DAVIS 6/30/2008
DRAWN BY: A. GRANT 6/30/2008
CHECKED BY: R. DAVIS 6/30/2008
SCALE: HORIZ. 1"=2' VERT. 1"=2'
PROJECT NO. 06037

PROFESSIONAL ENGINEER STATE OF NEVADA
C. RUSSELL DAVIS
Exp. 12/31/08
CIVIL & STRUCTURAL
No. 8255
7/16/08

SHEET
341 B45
338 OF 453 SHEETS

DRAWING NO.
107V3759

P:\06\06037\A-DWG\HORSEDR_B45.DWG

Russ Davis

Thursday, July 03, 2008 8:05:31 AM