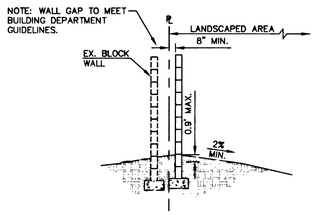

C SECTION • NORTH PROPERTY LINE
NOT TO SCALE

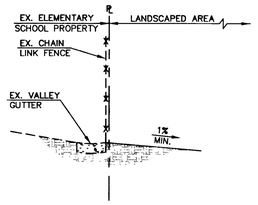

D SECTION • WEST PROPERTY LINE
NOT TO SCALE

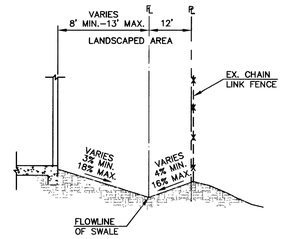

E SECTION • SOUTH PROPERTY LINE
NOT TO SCALE

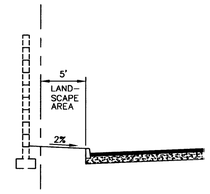

F SECTION • EAST PROPERTY LINE
NOT TO SCALE

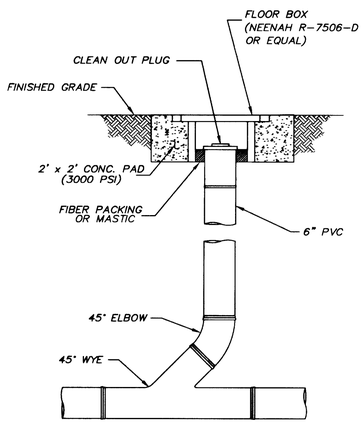

1 CLEAN OUT DETAIL
(NOT TO SCALE)

54167

ENGINEER-STATE OF NEVADA
MARK A. VYVER
STATE OF NEVADA
No. 15519
PROFESSIONAL
4/4/03

REV.	DATE	DESCRIPTION	DATE	APPROVAL

The Keith Companies
TKC
444 East Warm Springs Road, Suite 110, Las Vegas, Nevada 89119
Ph (702) 362-2000 Fax (702) 362-8559
Water Resources Land Planning Civil Engineering Land Surveying Mapping Environmental Services

TITLE FRONTIER GIRL SCOUT COUNCIL
HEADQUARTERS BUILDING
SHEET DESCRIPTION: DETAIL SHEET
JUNE 13, 2003

JOB • 51392.01
SHEET NO.:
DE01
3 OF 6 SHEETS
CLV#: 107N3727