DRAWING LIST

SHEET NO.	DRAWING NO.	DESCRIPTION
1	G1	COVER SHEET
2	G2	VICINITY MAP, DRAWING LIST, LEGEND & ABBREVIATIONS
3	G3	GENERAL NOTES
4	G4	RECORD OF SURVEY
5	SS1	SANITARY SEWER DESIGN PLAN AND PROFILE "RS" 10+00 TO "RS" 15+00
6	SS2	SANITARY SEWER DESIGN PLAN AND PROFILE "CS" 20+30 TO "CS" 28+50
7	SS3	SANITARY SEWER DESIGN PLAN AND PROFILE "CS" 28+50 TO "CS" 35+50
8	SS4	SANITARY SEWER DESIGN PLAN AND PROFILE "CS" 35+50 TO "CS" 43+50
9	SS5	SANITARY SEWER DESIGN PLAN AND PROFILE "CS" 43+50 TO "CS" 51+50
10	SS6	SANITARY SEWER DESIGN PLAN AND PROFILE "CS" 51+50 TO "CS" 59+50
11	SS7	SANITARY SEWER DESIGN PLAN AND PROFILE "CS" 59+50 TO "CS" 67+50
12	SS8	SANITARY SEWER DESIGN PLAN AND PROFILE "CS" 67+50 TO "CS" 75+50
13	LT1	SEWER LATERAL PROFILE
14	PR1	PAVEMENT REPLACEMENT "CS" 20+50 TO "CS" 35+50
15	PR1A	PAVEMENT REPLACEMENT "CS" 20+50 TO "CS" 35+50
16	PR2	PAVEMENT REPLACEMENT "CS" 35+50 TO "CS" 51+50
17	PR3	PAVEMENT REPLACEMENT "CS" 51+50 TO "CS" 67+50
18	PR4	PAVEMENT REPLACEMENT "CS" 67+50 TO "CS" 75+50
19	ST1	STRIPING AND SIGNING PLAN "CS" 20+50 TO "CS" 35+50
20	ST2	STRIPING AND SIGNING PLAN "CS" 35+50 TO "CS" 51+50
21	ST3	STRIPING AND SIGNING PLAN "CS" 51+50 TO "CS" 67+50
22	ST4	STRIPING AND SIGNING PLAN "CS" 67+50 TO "CS" 75+50
23	D1	MISCELLANEOUS DETAILS
24	D2	MANHOLE DETAILS
25	D3	STORM DRAIN REPLACEMENT DETAILS
26	D4	DURANGO SEWER ABANDONMENT DETAIL
27	D5	STRUCTURAL CHANNEL DETAILS
28	D6	STRUCTURAL CHANNEL DETAILS
29	D7	STRUCTURAL CHANNEL DETAILS
30	D8	FENCE AND WALL DETAILS
31	D9	DROP MANHOLE DETAIL
32	D10	MANHOLE DETAILS
33	TS1	EXISTING TRAFFIC SIGNAL UNDERGROUND DURANGO / CHEYENNE
34	TS2	EXISTING TRAFFIC SIGNAL UNDERGROUND SOARING GULLS / CHEYENNE
35	TS3	EXISTING TRAFFIC SIGNAL UNDERGROUND CIMARRON / CHEYENNE

NV ENERGY PLANS

SHEETS 1 THROUGH 3	CLV-DURANGO HILLS RELIEF SEWER PROJECT - CHEYENNE & DURANGO

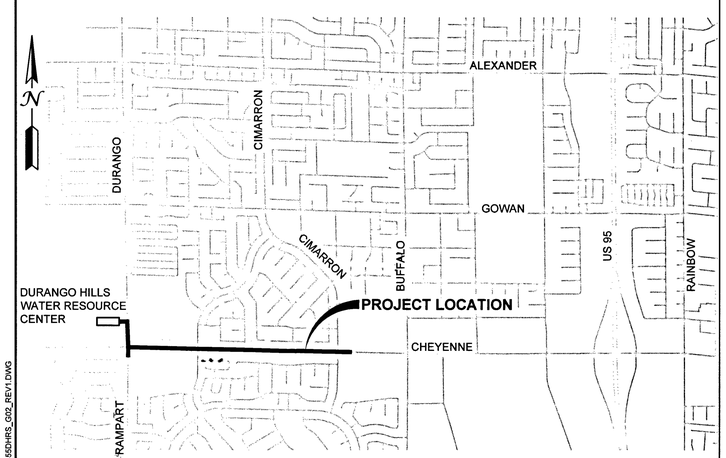

VICINITY MAP

ABBREVIATIONS

A	ANODE	M&O	MILL AND OVERLAY
ABD	ABANDON	MATL	MATERIAL
AC	ASPHALT CONCRETE/CEMENT	MAX	MAXIMUM
ACP	ASBESTOS CEMENT PIPE	MECH	MECHANICAL
ADJ	ADJUST	MH	MANHOLE
AL	ALUMINUM	MIN	MINIMUM
ALIGN	ALIGNMENT	MISC	MISCELLANEOUS
AP	ANGLE POINT	MN	MAIN
APPROX	APPROXIMATELY	MOD	MODIFY OR MODIFIED
AVE	AVENUE	MON	MONUMENT
		MTN	MOUNTAIN
B	BOTTOM		
BLVD	BOULEVARD	N	NORTH
BM	BENCH MARK	NA	NOT APPLICABLE
BO	BLOW OFF	NDOT	NEVADA DEP'T OF TRANSPORTATION
BOT	BOTTOM	NE	NORTHEAST
BRG	BEARING	NEC	NECESSARY
		NO	NUMBER
C	CABLE TELEVISION	NTS	NOT TO SCALE
CAB	CABINET	NW	NORTHWEST
CATV	CABLE TELEVISION		
C TO C	CENTER TO CENTER	OC	ON CENTER
CCFR	CENTRIFUGALLY CAST FIBERGLASS REINFORCED	OD	OUTSIDE DIAMETER
		OH	OVERHEAD
CCPW	CLARK COUNTY PUBLIC WORKS	OHP	OVERHEAD POWER
CCSD	CLARK COUNTY SANITATION DISTRICT	ORIG	ORIGINAL
CL	CENTER LINE	P ESMT	PERMANENT EASEMENT
CLR	CLEAR	PB	PULL BOX
CLV	CITY OF LAS VEGAS	PE	POLYETHYLENE
CMP	CORRUGATED METAL PIPE	PERM	PERMANENT
CONC	CONCRETE	PJF	PREFORMED JOINT FILLER
CONST	CONSTRUCT	PL	PROPERTY LINE
COR	CORNER	PL	STEEL PLATE
CPLG	COUPLING	POC	POINT ON CURVE
CT	COURT	POL	POINT ON LINE
CTR	CENTER	PSF	POUNDS PER SQUARE FOOT
CU	CUBIC	PSI	POUNDS PER SQUARE INCH
		P/P	POWER POLE
DCSWCS	DESIGN AND CONSTRUCTION STANDARDS FOR WASTEWATER COLLECTION SYSTEMS	PT	POINT, POINT OF TANGENCY
		PVC	POLYVINYL CHLORIDE
		PVMNT	PAVEMENT
DEG	DEGREE		
DET	DETAIL	R	RIGHT, RADIUS
DI	DROP INLET	RCP	REINFORCED CONCRETE PIPE
DIA	DIAMETER	RD	ROAD
DIM	DIMENSION	RDCR	REDUCER
DIST	DISTANCE	REINF	REINFORCE
DWG	DRAWING	REP	REPLACE OR REPLACEMENT
DR	DRIVE	REQD	REQUIRED
D/W	DRIVEWAY	ROW	RIGHT OF WAY
		RP	REDUCE PRESSURE PRINCIPLE ASSEMBLY
E	ELECTRICAL	RPPA	REDUCE PRESSURE PRINCIPLE ASSEMBLY
E	EAST	RW	RECLAIMED WATER
EA	EACH		
EF	EACH FACE	S	SLOPE
EFF	TREATED EFFLUENT	S	SOUTH
EL	ELEVATION	SCH	SCHEDULE
ELB	ELBOW	SD	STORM DRAIN
ELEC	ELECTRICAL	SDMH	STORM DRAIN MANHOLE
ENGR	ENGINEER	SE	SOUTHEAST
EW	EACH WAY	SHT	SHEET
EX	EXISTING	SIM	SIMILAR
EXP	EXPANSION	SL	STREET LIGHT
EXC	EXCAVATION	SLB	STREET LIGHT BOX
		SMH	SEWER MANHOLE
F	FIBER OPTIC	SNWS	SOUTHERN NEVADA WATER SYSTEM
FLEX	FLEXIBLE	SPECS	CONTRACT SPECIFICATIONS
FRP	FIBERGLASS REINFORCED PLASTIC	SQ	SQUARE
FT	FOOT	SS	SANITARY SEWER
FTG	FOOTING	SSMH	SANITARY SEWER MANHOLE
FND	FOUND	SST	STAINLESS STEEL
FO	FIBER OPTIC	ST	STREET
		STA	STATION
G	GAS	STD	STANDARD
GA	GAGE	STL	STEEL
GALV	GALVANIZED	STLT	STREET LIGHT
GND	GROUND	SYMM	SYMMETRICAL
		SW	SOUTHWEST
HDPE	HIGH DENSITY POLYETHYLENE	S/W	SIDEWALK
HP	HIGH PRESSURE		
HT	HEIGHT	T	TEST STATION
HORIZ	HORIZONTAL	T	TOP
		TBD	TO BE DETERMINED
ID	INSIDE DIAMETER	TBM	TEMPORARY BENCH MARK
IN	INCH	TE	TELEPHONE
INCR	INCREASE	TEFO	TRAFFIC ENGINEERING FIELD OPERATIONS
INV	INVERT	TEMP	TEMPORARY
IRR	IRRIGATION PIPE	TRANS	TRANSMISSION
IC	TRAFFIC SIGNAL INTERCONNECT	TS	TRAFFIC SIGNAL
		TSB	TRAFFIC SIGNAL BOX
L	LEFT	TYP	TYPICAL
L	LOOP		
LBS	POUNDS	UG	UNDERGROUND
LF	LINEAR FEET	UGE	UNDERGROUND ELECTRICAL
LG	LENGTH	UGT	UNDERGROUND TELEPHONE
LVVWD	LAS VEGAS VALLEY WATER DISTRICT	USD	UNIFORM STANDARD DRAWING
		USS	UNIFORM STANDARD SPECIFICATION
		VCP	VITRIFIED CLAY PIPE
		VERT	VERTICAL
		VLT	VAULT
		W	WATER
		W	WEST
		W	WIDTH
		WM	WATER METER
		W/	WITH
		W/O	WITHOUT

LEGEND

EXISTING NON-ANNOTATED FEATURES

- INDEX CONTOUR
- INTERMEDIATE CONTOUR
- CURB LINE
- GUTTER/CONCRETE EDGE
- FENCE
- RETAINING WALL
- BLOCK WALL
- CATV — CABLE TELEVISION CONDUIT
- 4" PE G — GAS PIPE (SIZE & TYPE VARIES)
- 12" SS — SANITY SEWER PIPE (SIZE VARIES)
- 8" PVC W — WATER PIPE (SIZE & TYPE VARIES)
- 4-4" UGT — TELEPHONE CONDUIT (# OF CONDUIT & SIZE VARIES)
- 18" RCP SD — STORM DRAIN PIPE (SIZE VARIES)
- TS — TRAFFIC SIGNAL CONDUIT
- 6-6" UGE — ELECTRICAL CONDUIT (# OF CONDUIT & SIZE VARIES)
- OHP — OVERHEAD ELECTRICAL LINE
- OHP TRANS — OVERHEAD ELECTRICAL TRANSMISSION LINE
- IC — INTERCONNECT CONDUIT
- FO — FIBER OPTIC CONDUIT
- SL — STREET LIGHT CONDUIT
- TREELINE
- BRUSHLINE
- POWER POLES
- POLE ANCHOR
- TRANSMISSION TOWER
- LIGHT POLE
- POST/POLE
- SIGN
- FIRE HYDRANT
- MANHOLE
- OR VALVE COVER
- TRAFFIC SIGNAL
- R.R./CROSSWALK SIGNAL
- MAIL BOX
- MISC. OBJECT
- WM WATER METER
- W WATER MANHOLE
- BO WATER BLOW OFF
- PIPE CAP
- PIPE CAP WITH BLOW OFF
- A AIR VALVE
- RP REDUCE PRESSURE PRINCIPLE ASSEMBLY
- T TEST STATION
- PULL BOX
- C CABLE TELEVISION BOX
- E ELECTRICAL MANHOLE
- E ELECTRICAL BOX OR VAULT
- TS TRAFFIC SIGNAL BOX
- F FIBER OPTIC BOX
- S STREET LIGHT BOX
- TE TELEPHONE BOX
- UTIL. VAULT/BOX
- METER BOX

BASIS OF BEARINGS:

GRID NORTH AS DEFINED BY THE CENTRAL MERIDIAN OF THE NEVADA COORDINATE REFERENCE SYSTEM (NCRS), LAS VEGAS HIGH ELEVATION ZONES, NORTH AMERICAN DATUM OF 1983 (NAD83); SAID MERIDIAN BEING COINCIDENT WITH 114°58' WEST OF THE GREENWICH MERIDIAN

COORDINATE SYSTEM DEFINITION:

DATUM/REFERENCE FRAME:	NAD83(CORS96) EPOCH 2002.0
MAPPING PROJECTION PARAMETERS:	
SYSTEM:	NEVADA COORDINATE REFERENCE SYSTEM (NCRS)
ZONE:	LAS VEGAS ZONE
PROJECTION TYPE:	TRANSVERSE MERCATOR
STANDARD PARALLEL:	
(AND LATITUDE OF GRID ORIGIN):	36°15'00" N
LONGITUDE OF CENTRAL MERIDIAN:	114°58'00" W
LINEAR UNIT:	US SURVEY FOOT (SFT)
FALSE NORTHING:	656,166.6667 SFT (200,000.000 m)
FALSE EASTING:	328,083.3333 SFT (100,000.000 m)
SCALE FACTOR AT CENTRAL MERIDIAN:	1.0001 (EXACT)

BENCHMARK:

CITY OF LAS VEGAS BENCHMARK #7LV0017NES, BEING A RIVET AND PLATE IN TOP OF CURB AT THE SOUTHWEST CORNER OF RAMPART BOULEVARD AND CHEYENNE AVENUE.

ELEVATION: 2451.49 (FEET)
747.2142 (METERS)

BASED UPON THE NORTH AMERICAN VERTICAL DATUM OF 1988 (NAVD 88).

1st APPROVED ON: 04/29/14

APPROVED FOR CONSTRUCTION
Las Vegas Valley Water District Engineering Services Manager
Date 8/14/14 Project No. 115833

FAST
Call before you UnderGround
1-702-432-5300
FREEWAY AND ARTERIAL SYSTEM OF TRANSPORTATION

AVOID OVERHEAD POWER LINE CONTACT. IT'S COSTLY.
Call before you Overhead
1-702-227-2929
NV ENERGY ENVIRONMENT AND SAFETY SERVICES DEPARTMENT

Call before you Dig
AVOID CUTTING UNDERGROUND UTILITY LINES. IT'S COSTLY.
Call 811

HANSEN #29930

NO.	DATE	REVISION	BY	APVD
1	8-4-14	ADDED PROJECT BENCHMARK	MW	MW

DSGN	DR	CHK	APVD
M. WARNICK	D. PUBLOW	CH2M HILL	J. GRIEST

DEPARTMENT OF PUBLIC WORKS
ENGINEERING DESIGN SECTION
CITY ENGINEER: DAVID N. BOWERS, P.E.
PROJECT MANAGER: GINA VENGLASS, P.E.

DURANGO HILLS RELIEF SEWER PROJECT

CH2MHILL®
2485 VILLAGE VIEW DRIVE, SUITE 350, HENDERSON, NV 89074
PHONE 702-369-5175, CH2M HILL, Project #240066

VICINITY MAP, DRAWING LIST, LEGEND & ABBREVIATIONS

PROFESSIONAL ENGINEER - STATE OF NEVADA
MICHAEL V. WARNICK
EXP. 06/30/16
CIVIL
No. 20023
8-4-14

Sheet G2
2 of 35
DATE April 2014
DWG NO. 307V1045

FILE NAME: 41345ZDHRS_G02_REV1.DWG

DRAWING LIST

SHEET NO.	DRAWING NO.	DESCRIPTION
1	G1	COVER SHEET
2	G2	VICINITY MAP, DRAWING LIST, LEGEND & ABBREVIATIONS
3	G3	GENERAL NOTES
4	G4	RECORD OF SURVEY
5	SS1	SANITARY SEWER DESIGN PLAN AND PROFILE "RS" 10+00 TO "RS" 15+00
6	SS2	SANITARY SEWER DESIGN PLAN AND PROFILE "CS" 20+30 TO "CS" 28+50
7	SS3	SANITARY SEWER DESIGN PLAN AND PROFILE "CS" 28+50 TO "CS" 35+50
8	SS4	SANITARY SEWER DESIGN PLAN AND PROFILE "CS" 35+50 TO "CS" 43+50
9	SS5	SANITARY SEWER DESIGN PLAN AND PROFILE "CS" 43+50 TO "CS" 51+50
10	SS6	SANITARY SEWER DESIGN PLAN AND PROFILE "CS" 51+50 TO "CS" 59+50
11	SS7	SANITARY SEWER DESIGN PLAN AND PROFILE "CS" 59+50 TO "CS" 67+50
12	SS8	SANITARY SEWER DESIGN PLAN AND PROFILE "CS" 67+50 TO "CS" 75+50
13	LT1	SEWER LATERAL PROFILE
14	PR1	PAVEMENT REPLACEMENT "CS" 20+50 TO "CS" 35+50
15	PR1A	PAVEMENT REPLACEMENT "CS" 20+50 TO "CS" 35+50
16	PR2	PAVEMENT REPLACEMENT "CS" 35+50 TO "CS" 51+50
17	PR3	PAVEMENT REPLACEMENT "CS" 51+50 TO "CS" 67+50
18	PR4	PAVEMENT REPLACEMENT "CS" 67+50 TO "CS" 75+50
19	ST1	STRIPING AND SIGNING PLAN "CS" 20+50 TO "CS" 35+50
20	ST2	STRIPING AND SIGNING PLAN "CS" 35+50 TO "CS" 51+50
21	ST3	STRIPING AND SIGNING PLAN "CS" 51+50 TO "CS" 67+50
22	ST4	STRIPING AND SIGNING PLAN "CS" 67+50 TO "CS" 75+50
23	D1	MISCELLANEOUS DETAILS
24	D2	MANHOLE DETAILS
25	D3	STORM DRAIN REPLACEMENT DETAILS
26	D4	DURANGO SEWER ABANDONMENT DETAIL
27	D5	STRUCTURAL CHANNEL DETAILS
28	D6	STRUCTURAL CHANNEL DETAILS
29	D7	STRUCTURAL CHANNEL DETAILS
30	D8	FENCE AND WALL DETAILS
31	D9	DROP MANHOLE DETAIL
32	D10	MANHOLE DETAILS
33	TS1	EXISTING TRAFFIC SIGNAL UNDERGROUND DURANGO / CHEYENNE
34	TS2	EXISTING TRAFFIC SIGNAL UNDERGROUND SOARING GULLS / CHEYENNE
35	TS3	EXISTING TRAFFIC SIGNAL UNDERGROUND CIMARRON / CHEYENNE

NV ENERGY PLANS

SHEETS 1 THROUGH 3 — CLV-DURANGO HILLS RELIEF SEWER PROJECT - CHEYENNE & DURANGO

SOUTHWEST GAS PLANS

SHEETS 1 THROUGH 5 — F-CLV DURANGO/CHEYENNE 4"

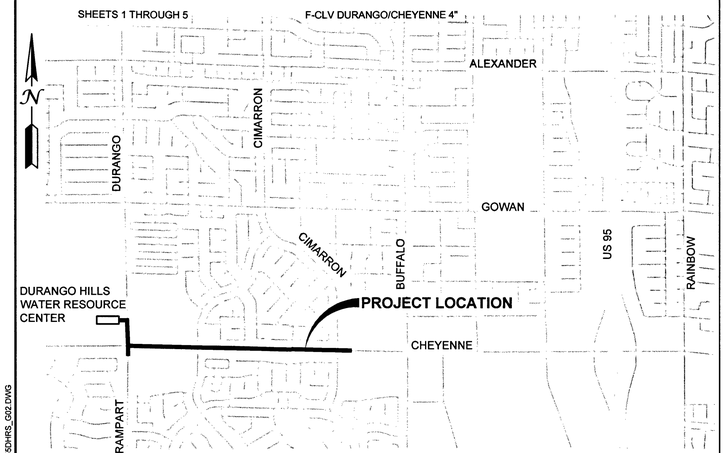

VICINITY MAP

ABBREVIATIONS

A	ANODE
ABD	ABANDON
AC	ASPHALT CONCRETE/CEMENT
ACP	ASBESTOS CEMENT PIPE
ADJ	ADJUST
AL	ALUMINUM
ALIGN	ALIGNMENT
AP	ANGLE POINT
APPROX	APPROXIMATELY
AVE	AVENUE
B	BOTTOM
BLVD	BOULEVARD
BM	BENCH MARK
BO	BLOW OFF
BOT	BOTTOM
BRG	BEARING
C	CABLE TELEVISION
CAB	CABINET
CATV	CABLE TELEVISION
C TO C	CENTER TO CENTER
CCFR	CENTRIFUGALLY CAST FIBERGLASS REINFORCED
CCPW	CLARK COUNTY PUBLIC WORKS
CCSD	CLARK COUNTY SANITATION DISTRICT
CL	CENTER LINE
CLR	CLEAR
CLV	CITY OF LAS VEGAS
CMP	CORRUGATED METAL PIPE
CONC	CONCRETE
CONST	CONSTRUCT
COR	CORNER
CPLG	COUPLING
CT	COURT
CTR	CENTER
CU	CUBIC
DCSWCS	DESIGN AND CONSTRUCTION STANDARDS FOR WASTEWATER COLLECTION SYSTEMS
DEG	DEGREE
DET	DETAIL
DI	DROP INLET
DIA	DIAMETER
DIM	DIMENSION
DIST	DISTANCE
DWG	DRAWING
DR	DRIVE
D/W	DRIVEWAY
E	ELECTRICAL
E	EAST
EA	EACH
EF	EACH FACE
EFF	TREATED EFFLUENT
EL	ELEVATION
ELB	ELBOW
ELEC	ELECTRICAL
ENGR	ENGINEER
EW	EACH WAY
EX	EXISTING
EXP	EXPANSION
EXC	EXCAVATION
F	FIBER OPTIC
FLEX	FLEXIBLE
FRP	FIBERGLASS REINFORCED PLASTIC
FT	FOOT
FTG	FOOTING
FND	FOUND
FO	FIBER OPTIC
G	GAS
GA	GAGE
GALV	GALVANIZED
GND	GROUND
HDPE	HIGH DENSITY POLYETHYLENE
HP	HIGH PRESSURE
HT	HEIGHT
HORIZ	HORIZONTAL
ID	INSIDE DIAMETER
IN	INCH
INCR	INCREASE
INV	INVERT
IRR	IRRIGATION PIPE
IC	TRAFFIC SIGNAL INTERCONNECT
L	LEFT
L	LOOP
LBS	POUNDS
LF	LINEAR FEET
LG	LENGTH
LVVWD	LAS VEGAS VALLEY WATER DISTRICT
M&O	MILL AND OVERLAY
MATL	MATERIAL
MAX	MAXIMUM
MECH	MECHANICAL
MH	MANHOLE
MIN	MINIMUM
MISC	MISCELLANEOUS
MN	MAIN
MOD	MODIFY OR MODIFIED
MON	MONUMENT
MTN	MOUNTAIN
N	NORTH
NA	NOT APPLICABLE
NDOT	NEVADA DEP'T OF TRANSPORTATION
NE	NORTHEAST
NEC	NECESSARY
NO	NUMBER
NTS	NOT TO SCALE
NW	NORTHWEST
OC	ON CENTER
OD	OUTSIDE DIAMETER
OH	OVERHEAD
OHP	OVERHEAD POWER
ORIG	ORIGINAL
P ESMT	PERMANENT EASEMENT
PB	PULL BOX
PE	POLYETHYLENE
PERM	PERMANENT
PJF	PREFORMED JOINT FILLER
PL	PROPERTY LINE
PL	STEEL PLATE
POC	POINT ON CURVE
POL	POINT ON LINE
PSF	POUNDS PER SQUARE FOOT
PSI	POUNDS PER SQUARE INCH
P/P	POWER POLE
PT	POINT, POINT OF TANGENCY
PVC	POLYVINYL CHLORIDE
PVMNT	PAVEMENT
R	RIGHT, RADIUS
RCP	REINFORCED CONCRETE PIPE
RD	ROAD
RDCR	REDUCER
REINF	REINFORCE
REP	REPLACE OR REPLACEMENT
REQD	REQUIRED
ROW	RIGHT OF WAY
RP	REDUCE PRESSURE PRINCIPLE ASSEMBLY
RPPA	REDUCE PRESSURE PRINCIPLE ASSEMBLY
RW	RECLAIMED WATER
S	SLOPE
S	SOUTH
SCH	SCHEDULE
SD	STORM DRAIN
SDMH	STORM DRAIN MANHOLE
SE	SOUTHEAST
SHT	SHEET
SIM	SIMILAR
SL	STREET LIGHT
SLB	STREET LIGHT BOX
SMH	SEWER MANHOLE
SNWS	SOUTHERN NEVADA WATER SYSTEM
SPECS	CONTRACT SPECIFICATIONS
SQ	SQUARE
SS	SANITARY SEWER
SSMH	SANITARY SEWER MANHOLE
SST	STAINLESS STEEL
ST	STREET
STA	STATION
STD	STANDARD
STL	STEEL
STLT	STREET LIGHT
SYMM	SYMMETRICAL
SW	SOUTHWEST
S/W	SIDEWALK
T	TEST STATION
T	TOP
TBD	TO BE DETERMINED
TBM	TEMPORARY BENCH MARK
TE	TELEPHONE
TEFO	TRAFFIC ENGINEERING FIELD OPERATIONS
TEMP	TEMPORARY
TRANS	TRANSMISSION
TS	TRAFFIC SIGNAL
TSB	TRAFFIC SIGNAL BOX
TYP	TYPICAL
UG	UNDERGROUND
UGE	UNDERGROUND ELECTRICAL
UGT	UNDERGROUND TELEPHONE
USD	UNIFORM STANDARD DRAWING
USS	UNIFORM STANDARD SPECIFICATION
VCP	VITRIFIED CLAY PIPE
VERT	VERTICAL
VLT	VAULT
W	WATER
W	WEST
W	WIDTH
WM	WATER METER
W/	WITH
W/O	WITHOUT

LEGEND

EXISTING NON-ANNOTATED FEATURES

- INDEX CONTOUR
- INTERMEDIATE CONTOUR
- CURB LINE
- GUTTER/CONCRETE EDGE
- FENCE
- RETAINING WALL
- BLOCK WALL
- CATV — CABLE TELEVISION CONDUIT
- 4" PE G — GAS PIPE (SIZE & TYPE VARIES)
- 12" SS — SANITY SEWER PIPE (SIZE VARIES)
- 8" PVC W — WATER PIPE (SIZE & TYPE VARIES)
- 4-4" UGT — TELEPHONE CONDUIT (# OF CONDUIT & SIZE VARIES)
- 18" RCP SD — STORM DRAIN PIPE (SIZE VARIES)
- TS — TRAFFIC SIGNAL CONDUIT
- 6-6" UGE — ELECTRICAL CONDUIT (# OF CONDUIT & SIZE VARIES)
- OHP — OVERHEAD ELECTRICAL LINE
- OHP TRANS — OVERHEAD ELECTRICAL TRANSMISSION LINE
- IC — INTERCONNECT CONDUIT
- FO — FIBER OPTIC CONDUIT
- SL — STREET LIGHT CONDUIT
- TREELINE
- BRUSHLINE
- POWER POLES
- POLE ANCHOR
- TRANSMISSION TOWER
- LIGHT POLE
- POST/POLE
- SIGN
- FIRE HYDRANT
- MANHOLE
- OR VALVE COVER
- TRAFFIC SIGNAL
- R.R./CROSSWALK SIGNAL
- MAIL BOX
- MISC. OBJECT
- WM WATER METER
- W WATER MANHOLE
- BO WATER BLOW OFF
- PIPE CAP
- PIPE CAP WITH BLOW OFF
- A AIR VALVE
- RP REDUCE PRESSURE PRINCIPLE ASSEMBLY
- T TEST STATION
- PULL BOX
- C CABLE TELEVISION BOX
- E ELECTRICAL MANHOLE
- E ELECTRICAL BOX OR VAULT
- TS TRAFFIC SIGNAL BOX
- F FIBER OPTIC BOX
- S STREET LIGHT BOX
- TE TELEPHONE BOX
- UTIL. VAULT/BOX
- METER BOX

BASIS OF BEARINGS:

GRID NORTH AS DEFINED BY THE CENTRAL MERIDIAN OF THE NEVADA COORDINATE REFERENCE SYSTEM (NCRS), LAS VEGAS HIGH ELEVATION ZONES, NORTH AMERICAN DATUM OF 1983 (NAD83); SAID MERIDIAN BEING COINCIDENT WITH 114°58' WEST OF THE GREENWICH MERIDIAN

COORDINATE SYSTEM DEFINITION:

DATUM/REFERENCE FRAME:	NAD83(CORS96) EPOCH 2002.0
MAPPING PROJECTION PARAMETERS:	
SYSTEM:	NEVADA COORDINATE REFERENCE SYSTEM (NCRS)
ZONE:	LAS VEGAS ZONE
PROJECTION TYPE:	TRANSVERSE MERCATOR
STANDARD PARALLEL:	
(AND LATITUDE OF GRID ORIGIN):	36°15'00" N
LONGITUDE OF CENTRAL MERIDIAN:	114°58'00" W
LINEAR UNIT:	US SURVEY FOOT (SFT)
FALSE NORTHING:	656,166.6667 SFT (200,000.000 m)
FALSE EASTING:	328,083.3333 SFT (100,000.000 m)
SCALE FACTOR AT CENTRAL MERIDIAN:	1.0001 (EXACT)

APPROVED FOR CONSTRUCTION
Las Vegas Valley Water District Engineering Services Manager
Date 04/21/14 Project No. 115833

FAST Call before you UnderGround 1-702-432-5300 FREEWAY AND ARTERIAL SYSTEM OF TRANSPORTATION

AVOID OVERHEAD POWER LINE CONTACT. IT'S COSTLY. Call before you Overhead 1-702-227-2929 NV ENERGY ENVIRONMENT AND SAFETY SERVICES DEPARTMENT

Call before you Dig. AVOID CUTTING UNDERGROUND UTILITY LINES. IT'S COSTLY. Call 811

HANSEN #29930

NO.	DATE	REVISION	BY	APVD

DSGN	DR	CHK	APVD
M. WARNICK	D. PUBLOW	CH2M HILL	J. GRIEST

DEPARTMENT OF PUBLIC WORKS
ENGINEERING DESIGN SECTION
CITY ENGINEER : DAVID N. BOWERS, P.E.
PROJECT MANAGER : GINA VENGLASS, P.E.

DURANGO HILLS RELIEF SEWER PROJECT

CITY OF LAS VEGAS NEVADA

CH2MHILL®
2485 VILLAGE VIEW DRIVE, SUITE 250, HENDERSON, NV 89074
PHONE 702-358-9175, CH2M HILL Project #240066

VICINITY MAP, DRAWING LIST, LEGEND & ABBREVIATIONS

PROFESSIONAL ENGINEER - STATE OF NEVADA
JEFFREY N. GRIEST
EXP. 06/30/15
CIVIL
No. 17156
4-22-14

Sheet G2
2 of 35
DATE April 2014
DWG NO. 307V1045

FILE NAME: 413450HRS_G02.DWG

CITY OF LAS VEGAS GENERAL NOTES

1. ALL CONSTRUCTION AND MATERIALS SHALL BE IN ACCORDANCE WITH THE "UNIFORM STANDARD SPECIFICATIONS FOR PUBLIC WORKS CONSTRUCTION OFF-SITE IMPROVEMENTS, CLARK COUNTY AREA NEVADA", LATEST ISSUE; THE "UNIFORM STANDARD DRAWINGS FOR PUBLIC WORKS CONSTRUCTION, CLARK COUNTY AREA NEVADA", LATEST REVISED EDITION; THE "SUMMERLIN IMPROVEMENT STANDARDS" FOR WORK IN THE SUMMERLIN AREA; AND OTHER APPLICABLE APPROVED STANDARDS ISSUED BY THE CONTROLLING AGENCY; THE UNIFORM BUILDING CODE; AND ALL LOCAL CITY CODES AND ORDINANCES APPLICABLE, EXCEPT AS NOTED ON THIS SHEET AS "DEVIATIONS FROM STANDARDS".

2. THE EXISTENCE AND LOCATION OF ANY OVERHEAD OR UNDERGROUND UTILITY LINES, PIPES, OR STRUCTURES SHOWN ON THESE PLANS ARE OBTAINED BY A RESEARCH OF THE AVAILABLE RECORDS. EXISTING UTILITIES AS SHOWN FROM CLV PLANS LIBRARY ARE APPROXIMATE AND FOR RECORD PURPOSES. EXISTING UTILITIES ARE LOCATED ON PLANS ONLY FOR THE CONVENIENCE OF THE CONTRACTOR. EXISTING UTILITY SERVICE LATERALS MAY NOT BE SHOWN ON THE PLANS. THE CONTRACTOR SHALL, AT HIS OWN EXPENSE, LOCATE ALL UNDERGROUND AND OVERHEAD INTERFERENCE WHICH MAY AFFECT HIS OPERATION DURING CONSTRUCTION AND SHALL TAKE ALL NECESSARY PRECAUTIONS TO AVOID DAMAGE TO SAME. THE CONTRACTOR SHALL USE EXTREME CAUTION WHEN WORKING NEAR OVERHEAD UTILITIES SO AS TO SAFELY PROTECT ALL PERSONNEL AND EQUIPMENT, AND SHALL BE RESPONSIBLE FOR ALL COST AND LIABILITY IN CONNECTION THEREWITH.

3. THE CONTRACTOR SHALL TAKE ALL PRECAUTIONARY MEASURES NECESSARY TO PROTECT EXISTING UTILITY LINES, STRUCTURES AND STREET IMPROVEMENTS WHICH ARE TO REMAIN IN PLACE, FROM DAMAGE, AND ALL SUCH IMPROVEMENTS OR STRUCTURES DAMAGED BY THE CONTRACTOR'S OPERATIONS SHALL BE REPAIRED OR REPLACED SATISFACTORY TO THE CITY ENGINEER OR OWNING UTILITY COMPANY AT THE EXPENSE OF THE CONTRACTOR.

4. ALL CONSTRUCTION SHALL BE AS SHOWN ON THESE PLANS, ANY REVISIONS SHALL HAVE THE PRIOR WRITTEN APPROVAL OF THE CITY ENGINEER.

5. TYPE V CEMENT SHALL BE USED IN ALL OFF-SITE CONCRETE WORK. CONCRETE TO BE 3000 P.S.I. MINIMUM @ 28 DAYS. MIX DESIGN TO BE APPROVED BY THE QUALITY CONTROL DIVISION, PRIOR TO THE USE ON THE PROJECT.

6. PERMITS ARE REQUIRED FOR ANY WORK IN THE PUBLIC RIGHT-OF-WAY. THE CONTRACTOR SHALL SECURE ALL PERMITS AND INSPECTIONS REQUIRED FOR THIS CONSTRUCTION.

7. EXPANSION JOINTS REQUIRED, MAXIMUM EVERY 300' IN EXTRUDED-TYPE CURB.

8. AC PAVEMENT TO BE 1/2" ABOVE LIP OF ALL GUTTERS AFTER COMPACTION, EXCEPT AT SIDEWALK RAMPS.

9. CURB AND GUTTER WITH A GRADE OF LESS THAN FOUR-TENTHS OF ONE PERCENT SHALL BE WATER-TESTED AS SOON AS POSSIBLE AFTER CONSTRUCTION. ANY CURB AND GUTTER FOUND TO BE UNACCEPTABLE TO THE CITY SHALL BE REMOVED AND REPLACED PER USD 216.

10. SIDEWALK RAMPS SHALL BE CONSTRUCTED IN EACH QUADRANT OF AN INTERSECTION PER USD 235, CASE I. EXACT LOCATION OF RAMPS MAY BE ADJUSTED IN THE FIELD BY A CITY PROJECT REPRESENTATIVE.

11. CONTRACTOR SHALL PROVIDE ALL NECESSARY HORIZONTAL AND VERTICAL TRANSITIONS BETWEEN NEW CONSTRUCTION AND EXISTING SURFACES TO PROVIDE FOR PROPER DRAINAGE AND FOR INGRESS AND EGRESS TO NEW CONSTRUCTION. THE EXTENT OF TRANSITIONS TO BE AS SHOWN ON PLANS, OR AS DESIGNATED IN THE FIELD BY CITY PROJECT REPRESENTATIVE.

12. EXACT LOCATION OF ALL SAWCUT LINES MAY BE DETERMINED IN THE FIELD BY A CITY PROJECT REPRESENTATIVE IF LOCATION ON PLANS IS NOT CLEARLY SHOWN, OR EXISTING PAVEMENT CONDITION REQUIRES RELOCATIONS.

13. THE CONTRACTOR SHALL TAKE ALL PRECAUTIONS NECESSARY TO PROTECT EXISTING PERMANENT SURVEY MONUMENTS. ANY MONUMENTS DISTURBED SHALL BE REPLACED, AND SHALL BE DONE ONLY BY A NEVADA PROFESSIONAL LAND SURVEYOR IN ACCORDANCE WITH THE UNIFORM STANDARD DRAWINGS - CLARK COUNTY AREA. A RECORD-OF-SURVEY FOR REPLACEMENT OF PERMANENT SURVEY MONUMENTS SHALL BE SUBMITTED TO THE CITY ENGINEER FOR APPROVAL PRIOR TO RECORDING. THE RECORD-OF-SURVEY SHALL BE PREPARED IN ACCORDANCE WITH NEVADA REVISED STATUTES 625.350.

14. UTILITY COMPANY METER BOXES, MANHOLE LIDS, VALVE COVERS, ETC., SHALL BE LOCATED OUT OF DRIVEWAYS, DRIVEWAY APRONS, FLOWLINES, AND CROSS GUTTERS UNLESS WRITTEN APPROVAL IS GRANTED BY THE AFFECTED UTILITY COMPANY AND THE CITY ENGINEER.

15. ALL WALLS, NEW OR EXISTING, ARE ONLY SHOWN ON CIVIL PLANS FOR THE PURPOSE OF REVIEWING GRADING RELATIONSHIPS; FLOOD CONTROL AND SIGHT DISTANCE AT INTERSECTIONS. NEW WALLS REQUIRE A SEPARATE PERMIT AND INSPECTION BY THE CLV BUILDING DEPARTMENT.

16. ASPHALT MIX DESIGN MUST BE SUBMITTED AND APPROVED BY THE CITY ENGINEER PRIOR TO THE PLACEMENT OF ASPHALT WITHIN CITY RIGHTS OF WAY.

17. CONTRACTOR SHALL ADJUST ALL NEW AND EXISTING INLETS, VALVE BOXES, MANHOLE RIMS, SEWER CLEANOUTS, ETC. TO FINISH GRADE AS APPLICABLE WHETHER OR NOT THEY ARE SHOWN ON THE PLANS.

18. MATERIALS, HANDLING AND PLACEMENT OF PORTLAND CEMENT CONCRETE SHALL BE IN ACCORDANCE WITH APPLICABLE SECTIONS OF NDOT AND CLARK COUNTY AREA SPECIFICATIONS (AS APPLICABLE) AND THE PLANS AND DETAILS SHOWN HEREON.

19. WHEN INSTALLING UNDERGROUND FACILITIES THAT REQUIRE UNDERGROUND LOCATING DEVICES SUCH AS MARKER BALLS, LOCATING RIBBON, ETC, THE CONTRACTOR SHALL PROVIDE WRITTEN DOCUMENTATION TO THE ENGINEER CERTIFYING THAT ALL DEVICES HAVE BEEN PLACED AND VERIFIED TO BE IN GOOD WORKING CONDITION PRIOR TO THE CONSTRUCTION OF ANY ROAD BASE.

20. SANITARY SEWER AND STORM DRAIN FINAL LOCATION MAP(S) SHALL BE PROVIDED TO THE ENGINEER PRIOR TO PROJECT ACCEPTANCE. THE MAP(S) SHALL INCLUDE THE HORIZONTAL AND VERTICAL (INVERT) LOCATION OF PUBLIC SEWER MANHOLES, STORM DRAIN MANHOLES, STORM DRAIN LATERALS AT THE CONNECTION TO THE STORM DRAIN MAIN AND AT THE CONNECTION TO A DROP INLET, AND THE CONNECTION OF SEWER SERVICE LATERALS TO THE SEWER MAIN AND WHERE THE SEWER SERVICE LATERALS EXITS THE PUBLIC RIGHT-OF-WAY. THE LOCATION SHALL BE DESCRIBED BY COORDINATES WHICH SHALL BE BASED ON THE OFFICIAL HORIZONTAL AND VERTICAL CONTROL NETWORKS OF THE CITY OF LAS VEGAS. FINAL LOCATION MAPS MUST BE SEALED AND CERTIFIED BY A NEVADA PROFESSIONAL LAND SURVEYOR TO HAVE POSITIONAL CERTAINTIES OF ± 0.09 METERS (± 0.3 FEET) HORIZONTALLY AND VERTICALLY. A SEPARATE ELECTRONIC COMMA DELIMITED FILE FOR THE SANITARY SEWER AND STORM DRAIN COORDINATES SHALL ALSO ACCOMPANY THE SANITARY SEWER AND STORM DRAIN FINAL LOCATION MAP(S).

21. CCTV VIDEO INSPECTION IS REQUIRED FOR ALL SEWER AND STORM DRAINS. THE CCTV VIDEO INSPECTIONS NEED TO BE PERFORMED PER THE DESIGN AND CONSTRUCTION STANDARDS FOR WASTEWATER COLLECTION SYSTEMS LATEST ADDITION.

22. A SEPARATE BORING PERMIT IS REQUIRED FOR ALL BORING ACTIVITIES.

23. THE CONTRACTOR IS TO MAINTAIN AND KEEP OPERATIONAL ALL EXISTING ITS INFRASTRUCTURE WITHIN THE CONSTRUCTION LIMITS. IF ANY EXISTING ITS INFRASTRUCTURE IS DAMAGED DUE TO CONSTRUCTION WITHIN THE PROJECT LIMITS THE CONTRACTOR SHALL IMMEDIATELY CONTACT MR. JESUS "CHUY" MARMOLEJO (RTC/FAST MANAGER TRAFFIC SYSTEMS MAINTENANCE) AT 702-604-7078.

REVISED MARCH 13, 2013 (CPM VERSION)

LAS VEGAS VALLEY WATER DISTRICT STANDARD NOTES

LVVWD PROJECT NO. 115833

1. NO WORK SHALL BEGIN UNTIL THE WATER PLANS HAVE BEEN APPROVED FOR CONSTRUCTION BY THE LVVWD. FOLLOWING WATER PLAN APPROVAL, NOTICE SHALL BE GIVEN TO THE LVVWD COMMUNICATION SUPPORT CENTER (258-7171) TWO (2) WORKING DAYS PRIOR TO THE START OF CONSTRUCTION. FOR FUTURE INSPECTIONS, NOTICE MUST BE GIVEN BY 2:00 P.M. THE BUSINESS DAY PRIOR TO THE REQUESTED LVVWD INSPECTION. **WHEN INSPECTIONS, PLEASE REFER TO THE PROJECT# IDENTIFIED ABOVE.**

2. ALL WORK SHALL CONFORM TO LVVWD STANDARD PLATES, DRAWINGS, AND SPECIFICATIONS, AND TO THE 2010 EDITION OF THE UNIFORM DESIGN AND CONSTRUCTION STANDARDS FOR POTABLE WATER SYSTEMS (UDACS). **THE LATEST EDITION OF UDACS SHALL SUPERSEDE ANY CONFLICTS CONTAINED IN THE APPROVED DRAWINGS AND/OR SPECIFICATIONS.**

3. ALL WORK, EXCEPT AS MODIFIED BY THESE PLANS OR BY NOTE 2 ABOVE, SHALL BE DONE IN ACCORDANCE WITH THE MOST RECENT DRAFT OR EDITION OF THE UNIFORM STANDARD SPECIFICATIONS FOR PUBLIC WORKS CONSTRUCTION OFFSITE IMPROVEMENT, CLARK COUNTY AREA.

4. A SINGLE PIPE MATERIAL SHALL BE USED THROUGHOUT THE PROJECT UNLESS OTHERWISE APPROVED BY THE LVVWD.

5. ALL SERVICE LATERALS TWO (2) INCHES IN DIAMETER AND SMALLER SHALL BE TYPE K COPPER TUBING WITH LVVWD APPROVED SERVICE SADDLES.

6. ALL WATER METER BOXES SHALL BE LOCATED OUTSIDE OF DRIVEWAY AREAS.

7. ALL VALVES SHALL BE LOCATED OUTSIDE OF DRIVEWAYS, VALLEY AND CURB GUTTERS.

8. ALL WATER AND STORM DRAIN OR SANITARY SEWER CROSSINGS SHALL CONFORM TO SECTION 2.22 OF THE **2010** EDITION OF THE UDACS.

9. ALL WATER FACILITIES SHALL BE FILLED, DISINFECTED, PRESSURE TESTED, FLUSHED, FILLED AND AN ACCEPTABLE WATER SAMPLE OBTAINED, PRIOR TO CONNECTION TO THE LVVWD DISTRIBUTION SYSTEM.

10. THE CONTRACTOR MUST OBTAIN ALL METERS TWO (2) INCHES AND SMALLER FROM LVVWD CENTRAL STORES. TELEPHONE 258-3152 OR 258-3802, TWO (2) WORKING DAYS PRIOR TO METER PICKUP.

11. ANY INTERRUPTION OF SERVICE MUST BE PERFORMED IN ACCORDANCE WITH UDACS SECTION 3.14.01, AND APPROVED BY THE LVVWD INSPECTION DIVISION PRIOR TO SHUTDOWN. PROPER WRITTEN NOTIFICATION MUST BE GIVEN TO ALL AFFECTED CUSTOMERS.

12. ALL WATER FACILITY CONSTRUCTION MATERIALS USED MUST BE AS LISTED ON THE LVVWD PRE-APPROVED MATERIALS AND MANUFACTURER'S LISTING FOR NEW FACILITIES, LATEST REVISION, OR SPECIFICALLY APPROVED ON THESE PLANS.

13. TELEPHONE "CALL BEFORE YOU DIG" AT "811" OR 1-800-227-2600

14. THE INSTALLATION OF LAS VEGAS VALLEY WATER DISTRICT (LVVWD) MUNICIPAL WATER FACILITIES WITHIN ALL STREETS IS ASSUMED TO BE IN COMPLIANCE WITH THE UNIFORM STANDARDS, INCLUDING THE PLACEMENT OF ASPHALT PAVING STREET SURFACES. ANY REPAIR WORK DONE BY THE LVVWD TO THE MUNICIPAL FACILITIES WILL INCLUDE THE PLACEMENT OF ANY APPROPRIATELY SIZED ASPHALT REPAIR PATCH ON THE STREET SURFACE.

   ANY DECORATIVE PAVING SURFACE WITHIN THE STREET IS THE RESPONSIBILITY OF THE OWNER'S ASSOCIATION, OR THE INDIVIDUAL PROPERTY OWNERS IF NO OWNER'S ASSOCIATION IS IN EXISTENCE, OR THE AGENCY HAVING JURISDICTION. DECORATIVE SURFACE MATERIALS PLACED WITHIN THE TEN FOOT EASEMENT ABUTTING A PUBLIC OR PRIVATE STREET, IF DISTURBED BY THE LVVWD DURING THE REPAIR OR OPERATION OF ITS FACILITIES, WILL BE REPLACED BY LVVWD WITH AN APPROPRIATELY SIZED PLAIN FINISH CONCRETE PATCH. THE LVVWD WILL NOT RESTORE, AND WILL NOT BE RESPONSIBLE FOR THE RESTORATION OF, ANY DECORATIVE PAVING SURFACE WITHIN THE STREET. THE LVVWD WILL NOT ATTEMPT TO MATCH COLOR OR FINISH OF ANY ADJACENT MATERIALS.

APPROVED FOR CONSTRUCTION
(signature)
Las Vegas Valley Water District Engineering Services Manager
Date 04/29/14 Project No. 115833

CITY OF LAS VEGAS GRADING NOTES

1. IN THE EVENT THAT ANY UNFORESEEN CONDITIONS NOT COVERED BY THESE NOTES ARE ENCOUNTERED DURING GRADING OPERATIONS, THE OWNER/ENGINEER SHALL BE IMMEDIATELY NOTIFIED FOR DIRECTION.

2. IT SHALL BE THE RESPONSIBILITY OF THE CONTRACTOR TO PERFORM ALL NECESSARY CUTS AND FILLS WITHIN THE LIMITS OF THIS PROJECT AND THE RELATED OFF-SITE WORK, SO AS TO GENERATE THE DESIRED SUBGRADE, FINISH GRADES AND SLOPES SHOWN.

3. CONTRACTOR SHALL TAKE FULL RESPONSIBILITY FOR ALL EXCAVATION. ADEQUATE SHORING SHALL BE DESIGNED AND PROVIDED BY THE CONTRACTOR TO PREVENT UNDERMINING OF ANY ADJACENT FEATURES OR FACILITIES AND/OR CAVING OF THE EXCAVATION.

4. THE GRADING CONTRACTOR IS RESPONSIBLE TO COORDINATE WITH THE OWNER TO PROVIDE FOR THE REQUIREMENTS OF THE PROJECT STORM WATER POLLUTION PREVENTION PLAN (SWPPP) AND ASSOCIATED PERMIT.

5. CONTRACTOR SHALL GRADE TO THE LINES AND ELEVATIONS SHOWN ON THE PLANS WITHIN THE FOLLOWING HORIZONTAL AND VERTICAL TOLERANCES AND DEGREES OF COMPACTION, IN THE AREAS INDICATED:

	HORIZONTAL	VERTICAL
A. PAVEMENT AREA SUBGRADE	0.1'±	+0.0' TO -0.1'
B. ENGINEERED FILL	0.5'±	+0.1' TO -0.1'

   COMPACTION TESTING WILL BE PERFORMED BY THE OWNER OR HIS REPRESENTATIVE.
   COMPACTION SHALL COMPLY WITH THE REQUIREMENTS OF THE ENGINEER.

6. ALL CUT AND FILL SLOPES SHALL BE PROTECTED UNTIL EFFECTIVE EROSION CONTROL HAS BEEN ESTABLISHED.

7. THE USE OF POTABLE WATER WITHOUT A SPECIAL PERMIT FOR BUILDING OR CONSTRUCTION PURPOSES INCLUDING CONSOLIDATION OF BACKFILL OR DUST CONTROL IS PROHIBITED. THE CONTRACTOR SHALL OBTAIN ALL NECESSARY PERMITS FOR CONSTRUCTION WATER.

8. THE CONTRACTOR SHALL MAINTAIN THE STREETS, SIDEWALKS AND ALL OTHER PUBLIC RIGHT- OF-WAY IN A CLEAN, SAFE AND USABLE CONDITION. ALL SPILLS OF SOIL, ROCK OR CONSTRUCTION DEBRIS SHALL BE PROMPTLY REMOVED FROM THE PUBLICLY OWNED PROPERTY DURING CONSTRUCTION AND UPON COMPLETION OF THE PROJECT. ALL ADJACENT PROPERTY, PRIVATE OR PUBLIC SHALL BE MAINTAINED IN A CLEAN, SAFE AND USABLE CONDITION.

9. IN THE EVENT THAT ANY TEMPORARY CONSTRUCTION ITEM IS REQUIRED THAT IS NOT SHOWN ON THESE DRAWINGS, SUCH ITEM SHALL BE PROVIDED, AS DIRECTED BY THE CITY ENGINEER, AT NO EXPENSE TO THE CITY OF LAS VEGAS. TEMPORARY CONSTRUCTION INCLUDES DITCHES, BERMS, ROAD SIGNS AND BARRICADES, ETC.

REVISED JULY 2008 (CPM VERSION)

CITY OF LAS VEGAS SEWER NOTES

1. ALL CONSTRUCTION AND MATERIALS SHALL BE IN ACCORDANCE WITH THE LATEST EDITION OF THE DESIGN AND CONSTRUCTION STANDARDS FOR WASTEWATER COLLECTION SYSTEMS AND THE UNIFORM STANDARD SPECIFICATIONS FOR PUBLIC WORKS' CONSTRUCTION OFF-SITE IMPROVEMENTS, CLARK COUNTY AREA, NEVADA, AS AMENDED. IT WILL BE THE RESPONSIBILITY OF THE CONTRACTOR TO BE AWARE OF THE CONTENTS OF THE ABOVE SPECIFICATIONS.

2. IT SHALL BE THE CONTRACTOR'S RESPONSIBILITY TO PERFORM CONSTRUCTION AS PER PLANS. ANY ADDITIONS, DELETIONS, OR CHANGES SHALL FIRST MEET WITH THE APPROVAL OF THE CITY PLANNING ENGINEER.

3. CHISEL "S" OR "G" IN CURBS WHERE SEWER OR GAS LATERALS PASS UNDER THE CURB.

4. POLYVINYL (PVC) SEWER PIPE SHALL MEET ASTM D-3034 SDR 35 SPECIFICATIONS, INSTALLED WITH SAND BEDDING AND BACKFILL OF TYPE II AGGREGATE BASE.

5. ALL MANHOLES PAVED IN STREETS EIGHTY (80') FOOT R/W AND LARGER SHALL HAVE CONCRETE COLLARS. STREETS LESS THAN EIGHTY (80') FOOT R/W WILL REQUIRE RETROFIT IF PAVING DOES NOT CONFORM TO CITY STANDARDS AT THE MANHOLE.

6. TEE SADDLES SHALL BE USED TO CONNECT SEWER LATERALS TO EXISTING MAIN LINES UP TO TWELVE INCH (12 ") DIAMETER. CONNECTIONS TO FIFTEEN INCH (15 ") OR LARGER MAINS SHALL REQUIRE SPECIAL PROCEDURES. IN LINE "Y" 'S SHALL BE USED ON LINES TWELVE INCHES (12 ") OR ABOVE.

7. WATER MAINS SHALL BE PROTECTED IN ACCORDANCE WITH LVVWD STANDARDS WHENEVER A SEWER MAIN CROSSES OVER A WATER MAIN OR THE SEWER IS LESS THAN EIGHTEEN INCH (18 ") UNDER A WATER MAIN.

8. ALL CONTRACTORS INSTALLING SEWER MAINS THAT WILL BE UNDER THE JURISDICTION OF THE CITY OF LAS VEGAS MUST BE STATE OF NEVADA CLASS "A" CONTRACTORS.

9. THE CITY OF LAS VEGAS WILL NOT ACCEPT ANY SEWER MAINS WHICH HAVE A VERTICAL DEFLECTION OF MORE THAN ONE TENTH (0.1) OF A FOOT FROM THE APPROVED CONSTRUCTION PLANS AT ANY LOCATION. SEWER MAINS FOUND TO EXCEED THIS TOLERANCE WILL HAVE TO BE REPAIRED OR REMOVED OR REPLACED TO THE SATISFACTION OF THE CITY PLANNING ENGINEER PRIOR TO ACCEPTANCE BY THE CITY OF LAS VEGAS.

10. INSTALLATION OF CURVED SEWERS REQUIRES THE USE OF C-900 PVC PIPE WHICH ALLOWS FOR PIPE DEFLECTION AT THE JOINTS.

REVISED JANUARY 2008

CITY OF LAS VEGAS TRAFFIC NOTES

1. ALL CONSTRUCTION SIGNING, BARRICADING, AND TRAFFIC DELINEATION SHALL CONFORM TO THE "MANUAL ON UNIFORM TRAFFIC CONTROL DEVICES", LATEST EDITION.

2. THE STREET SIGN CONTRACTOR SHALL OBTAIN STREET NAMES AND BLOCK NUMBERING FROM THE PLANNING DEPARTMENT PRIOR TO CONSTRUCTION.

3. BEFORE ANY WORK IS STARTED IN THE RIGHT-OF-WAY, THE CONTRACTOR SHALL INSTALL ALL ADVANCE WARNING SIGNS FOR THE CONSTRUCTION ZONE. THE CONTRACTOR SHALL INSTALL TEMPORARY STOP SIGNS AT ALL NEW STREET ENCROACHMENTS INTO EXISTING CITY STREETS WHERE WARRANTED IMMEDIATELY AFTER FIRST GRADING WORK IS ACCOMPLISHED, AND SHALL MAINTAIN SAID SIGNS UNTIL PERMANENT SIGNS ARE INSTALLED.

4. WHEN A DESIGNATED "SUGGESTED ROUTE TO SCHOOL" IS ENCROACHED UPON BY A CONSTRUCTION WORK ZONE AND PUBLIC WORKS STAFF IDENTIFIES A NEED FOR STUDENTS TO BE ASSISTED IN THE SAFE CROSSING THROUGH THAT WORK ZONE, THE CONTRACTOR SHALL BE REQUIRED TO PROVIDE A QUALIFIED "CROSSING GUARD". THE GUARD SHALL BE PRESENT FOR THE FULL DURATION OF TIME THAT CHILDREN ARE LIKELY TO BE PRESENT.

5. IF THE IMPROVEMENTS NECESSITATE THE OBLITERATION, TEMPORARY OBSTRUCTION, TEMPORARY REMOVAL OR RELOCATION OF ANY EXISTING TRAFFIC PAVEMENT MARKING, SUCH PAVEMENT MARKING SHALL BE RESTORED OR REPLACED WITH LIKE MATERIALS TO THE SATISFACTION OF THE CITY TRAFFIC ENGINEER.

6. THE CONTRACTOR SHALL BE RESPONSIBLE FOR PROVIDING AND INSTALLING ALL PERMANENT SIGNS SHOWN ON THE PLANS. ALL NEW TRAFFIC SIGNS SHALL BE FABRICATED WITH DIAMOND GRADE VIP CLASS 6 REFLECTIVE SHEETING OR APPROVED EQUAL. ALL NEW TRAFFIC SIGNS, EXCEPT STREET NAME AND SCHOOL SPEED LIMIT SIGNS, SHALL HAVE 3M SERIES 1160 OR APPROVED EQUIVALENT ANTI-GRAFFITI PROTECTIVE OVERLAY FILM; SCHOOL ZONE SIGNS SHALL HAVE 3M SERIES 1150 ANTI-GRAFFITI PROTECTIVE OVERLAY FILM. STREET NAME SIGNS SHALL CONFORM IN THEIR ENTIRETY TO CURRENT CITY STANDARDS. ALL OTHER SIGNS SHALL BE STANDARD SIZE UNLESS OTHERWISE SPECIFIED ON THE PLANS. ALL SIGN POSTS SHALL BE INSTALLED IN ACCORDANCE WITH THE CURRENT CITY STANDARDS.

7. WHEN A PROPOSED STREET LIGHT STANDARD IS LOCATED WITHIN FIVE (5') FEET OF ANY PROPOSED SIGN SHOWN ON THE PLANS TO BE MOUNTED ON A SIGNPOST, THE SIGN SHALL BE MOUNTED ON THE STREET LIGHT STANDARD AND THE SIGNPOST SHALL BE ELIMINATED.

8. ALL PERMANENT TRAFFIC CONTROL DEVICES CALLED FOR HEREON SHALL BE IN PLACE AND IN FINAL POSITION PRIOR TO ALLOWING ANY PUBLIC TRAFFIC ONTO THE PORTIONS OF THE ROAD(S) BEING IMPROVED HERE UNDER, REGARDLESS OF THE STATUS OF COMPLETION OF PAVING OR OTHER OFF-SITE IMPROVEMENTS CALLED FOR BY THESE PLANS.

9. STREET SIGNS AND STOP SIGNS SHALL BE INSTALLED PER CITY STANDARD SPECIFICATIONS FOR PLACEMENT OF STREET NAME SIGNS.

10. THE CONTRACTOR SHALL PROVIDE ALL NECESSARY TRAFFIC CONTROL DEVICES AND FLAGGERS TO INSURE THE SAFETY OF THE PUBLIC IN OR AROUND THE WORK AREA. THE CONTRACTOR SHALL HAVE A CERTIFIED ATSSA TRAFFIC CONTROL TECHNICIAN OR IMSA WORK ZONE SAFETY SPECIALIST SET UP, MAINTAIN AND/OR REMOVE ALL TRAFFIC CONTROL DEVICES IN THE CITY OF LAS VEGAS RIGHT OF WAY.

11. WORK IN PUBLIC STREETS, ONCE BEGUN, SHALL BE EXPEDITED TO COMPLETION SO AS TO PROVIDE MINIMUM INCONVENIENCE TO ADJACENT PROPERTY OWNERS AND TO THE TRAVELING PUBLIC.

12. THE CONTRACTOR SHALL BE RESPONSIBLE FOR NOTIFYING REGIONAL TRANSPORTATION COMMISSION (R.T.C.) IF THE CONSTRUCTION INTERRUPTS OR RELOCATES A BUS STOP OR HAS AN ADVERSE EFFECT ON BUS SERVICE ON THAT STREET TO ARRANGE FOR TEMPORARY RELOCATION OF STOP.

13. GUARDS SHALL BE OBTAINED BY CONTACTING THE METROPOLITAN POLICE DEPARTMENT SPECIAL EVENTS UNIT (PHONE # 828-3442) WHO WILL PROVIDE OFFICERS PROPERLY TRAINED IN TRAFFIC CONTROL. FEES FOR THE USE OF THESE OFFICERS SHALL BE SET BY METRO AND WILL BE PAID BY THE CONTRACTOR. THE CONTRACTOR IS RESPONSIBLE FOR ALL ARRANGEMENTS WITH METRO.

1

REVISED MAY 5, 2008

FAST
Call before you UnderGround
1-702-432-5300
FREEWAY AND ARTERIAL SYSTEM OF TRANSPORTATION

AVOID OVERHEAD POWER LINE CONTACT. IT'S COSTLY.
Call before you Overhead
1-702-227-2929
NV ENERGY ENVIRONMENT AND SAFETY SERVICES DEPARTMENT

Call before you Dig
AVOID CUTTING UNDERGROUND UTILITY LINES. IT'S COSTLY.
Call 811

HANSEN #29930

NO.	DATE	REVISION	BY	APVD
1	2.12.14	REMOVE NOTE 14.	JG	JG

DSGN M. WARNICK | DR D. PUBLOW | CHK CH2M HILL | APVD J. GRIEST

DEPARTMENT OF PUBLIC WORKS
ENGINEERING DESIGN SECTION
CITY ENGINEER : DAVID N. BOWERS, P.E.
PROJECT MANAGER : GINA VENGLASS, P.E.

DURANGO HILLS RELIEF SEWER PROJECT

CITY OF LAS VEGAS NEVADA

CH2MHILL®
2485 VILLAGE VIEW DRIVE, SUITE 350, HENDERSON, NV 89074
PHONE 702-369-6175, CH2M HILL Project #240066

GENERAL NOTES

PROFESSIONAL ENGINEER - STATE OF NEVADA
JEFFREY N. GRIEST
EXP. 06/30/15
CIVIL
No. 17156
4-22-14

Sheet G3
3 of 35

DATE April 2014
DWG NO. 307V1045

FILE NAME: 413455DHRS_G03.DWG

DURANGO HILLS RELIEF SEWER PROJECT

LYING WITHIN SECTION 09 AND 16,
TOWNSHIP 20 SOUTH, RANGE 60 EAST, M.D.M.,
CITY OF LAS VEGAS, CLARK COUNTY, NEVADA

Inst #: 201309030001469
Fees: $18.00
N/C Fee: $0.00
09/03/2013 09:56:24 AM
Receipt #: 1756035
Requestor:
LAS VEGAS CITY
Recorded By: COJ Pgs: 2
DEBBIE CONWAY
CLARK COUNTY RECORDER

August 29, 2013
RECORD
Hooshmand Jahanpour-Burke, PLS
Land Surveyor
Public Works,
Engineering Division
City of Las Vegas
333 North Rancho Drive
Las Vegas, Nevada 89106

Sheet 1 of 2

CERTIFICATE OF AMENDMENT

DOCUMENT: **Record-of-Survey of Durango Hills Relief Sewer Project**
In file 188 of surveys at page 85,

LEGAL DESCRIPTION:

A portion of section 09 & 16, Township 20 South, Range 60 East, M.D.M., City of Las Vegas, Clark County, Nevada.

RECORDING DATE: May 02, 2013

CAPTION:

In accordance with the provisions of NRS Chapter 278.473, this Certificate of Amendment is to correct a scrivener's error. The coordinate value of the Brass Cap in Well, PLS 17833 at the Southwest corner of section 9, Township 20 South, Range 60 East, at the intersection of Durango Drive and Cheyenne Avenue is shown in error on said Record-of-Survey.
The Easting value shown in error is 356003.688, and should be amended to read:
236003.688,

SURVEYOR'S CERTIFICATE:

This certificate does not alter any lot, parcel or boundary line. This document supersedes the original recorded document.

9/03/13
Hooshmand Jahanpour-Burke, PLS
Professional Land Surveyor
Nevada Certificate No. 13929

Hooshmand Jahanpour-Burke
EXP: 6/30/15
PROFESSIONAL LAND SURVEYOR No. 13929 STATE OF NEVADA

Certificate of Amendment
Record-of-Survey of Durango Hills Relief Sewer Project
In file 188 of surveys at page 85,

Sheet 2 of 2

CITY SURVEYOR'S CERTIFICATE:

I hereby certify that I have examined the Certificate of Amendment and that the changes to the original document specified therein are provided for in applicable sections of NRS 278.010 to 278.630, inclusive, NRS 625.340 to 625.380, inclusive, and local ordinances adopted thereto, and I am satisfied that this Certificate of Amendment so amends or corrects the document as to make it technically correct.

9/3/13
Alan R. Riekki, PLS
City Surveyor
City of Las Vegas
Nevada Certificate No. 12469

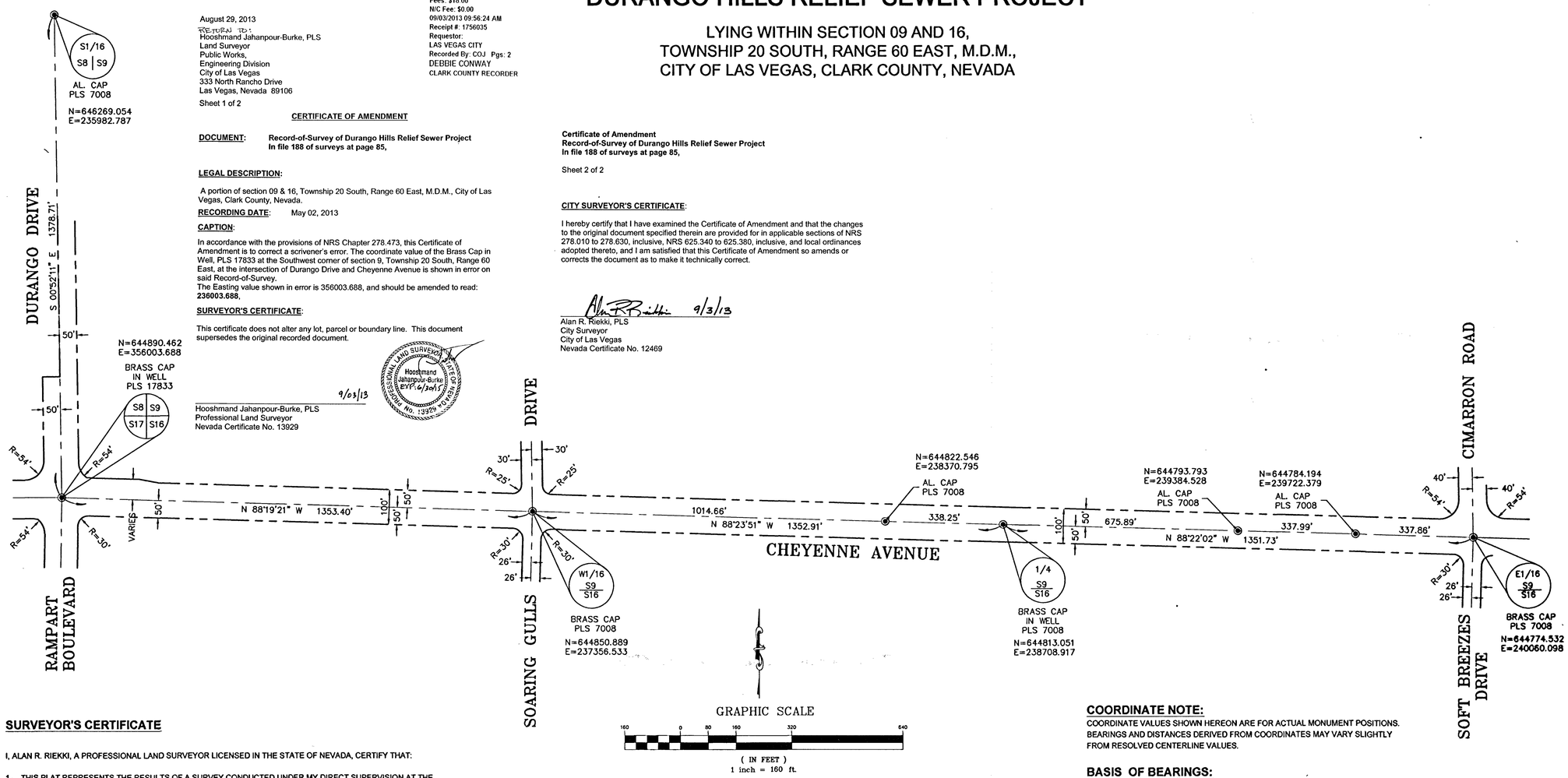

SURVEYOR'S CERTIFICATE

I, ALAN R. RIEKKI, A PROFESSIONAL LAND SURVEYOR LICENSED IN THE STATE OF NEVADA, CERTIFY THAT:

1- THIS PLAT REPRESENTS THE RESULTS OF A SURVEY CONDUCTED UNDER MY DIRECT SUPERVISION AT THE INSTANCE OF THE CITY OF LAS VEGAS

2- THE LANDS SURVEYED LIE WITHIN THE SECTIONS 9 AND 16, TOWNSHIP 20 SOUTH, RANGE 60 EAST, M.D.M., CLARK COUNTY, NEVADA AND THIS SURVEY WAS COMPLETED ON APRIL 23, 2013.

3- THIS SURVEY COMPLIES WITH THE APPLICABLE STATE STATUTES IN EFFECT ON THE DATE THAT THIS SURVEY WAS COMPLETED.

4- THE MONUMENTS DEPICTED ON THIS MAP ARE OF THE CHARACTER SHOWN, OCCUPY THE POSITIONS INDICATED AND ARE OF SUFFICIENT NUMBER AND DURABILITY.

PROFESSIONAL LAND SURVEYOR
ALAN R RIEKKI
Exp: 12/31/13
No. 12469
STATE OF NEVADA
5/2/13

ALAN R. RIEKKI PLS.
NEVADA CERTIFICATE NO. 12469
EXPIRATION DATE 12-31-2013

LEGEND:

— — —	CENTERLINE
— — —	RIGHT-OF-WAY LINE
◉	FOUND MONUMENTS AS NOTED
AL. CAP	ALUMINUM CAP

COORDINATE SYSTEM DEFINITION:

DATUM/REFERENCE FRAME:	NAD83(CORS96) EPOCH 2002.0
MAPPING PROJECTION PARAMETERS:	
SYSTEM:	NEVADA COORDINATE REFERENCE SYSTEM (NCRS)
ZONE:	LAS VEGAS ZONE
PROJECTION TYPE:	TRANSVERSE MERCATOR
STANDARD PARALLEL	
(AND LATITUDE OF GRID ORIGIN):	36° 15' 00" N
LONGITUDE OF CENTRAL MERIDIAN:	114° 58' 00" W
LINEAR UNIT:	US SURVEY FOOT (SFT)
FALSE NORTHING:	656,166.6687 SFT (200,000.000 m)
FALSE EASTING:	328,083.3333 SFT (100,000.000 m)
SCALE FACTOR AT CENTRAL MERIDIAN:	1.0001 (EXACT)

COORDINATE NOTE:

COORDINATE VALUES SHOWN HEREON ARE FOR ACTUAL MONUMENT POSITIONS. BEARINGS AND DISTANCES DERIVED FROM COORDINATES MAY VARY SLIGHTLY FROM RESOLVED CENTERLINE VALUES.

BASIS OF BEARINGS:

GRID NORTH AS DEFINED BY THE CENTRAL MERIDIAN OF THE NEVADA COORDINATE REFERENCE SYSTEM (NCRS), LAS VEGAS AND LAS VEGAS HIGH ELEVATION ZONES, NORTH AMERICAN DATUM OF 1983 (NAD83); SAID MERIDIAN BEING COINCIDENT WITH 114°58' WEST OF THE GREENWICH MERIDIAN

RECORDER'S NOTE:

ANY SUBSEQUENT CHANGES TO THIS MAP SHOULD BE EXAMINED AND MAY BE DETERMINED BY REFERENCE TO THE COUNTY RECORDER'S CUMULATIVE MAP INDEX. NRS 278.5695

SHEET 1 OF 1

RECORD OF SURVEY FOR

DURANGO HILLS RELIEF SEWER PROJECT

PORTION OF SECTION 09 & 16, T. 20 S., R. 60 E., M.D.M.
CITY OF LAS VEGAS, CLARK COUNTY, NEVADA

CITY OF LAS VEGAS NEVADA

DRAWN BY: HJB
CHECKED BY: ARR
DATE: APRIL 23, 2013
FILE NAME: 962– R–O–S.DWG
ADDRESS: 333 N. RANCHO DRIVE, LAS VEGAS, NV. 89106

NO. 03117
FILED AT THE REQUEST OF
CITY OF LAS VEGAS
DATE: 5/2/13 TIME 3:31
FILE 188, PAGE 0085
OF SURVEYS
OFFICIAL RECORDS
BOOK NO. 20130502
CLARK COUNTY, NEVADA
RECORDS
DEBBIE CONWAY, RECORDER
FEE 24.00 DEPUTY COJ

NO.	DATE	REVISION	BY	APVD
DSGN	DR	CHK	APVD	

DEPARTMENT OF PUBLIC WORKS
ENGINEERING DESIGN SECTION
CITY ENGINEER: DAVID N. BOWERS, P.E.
PROJECT MANAGER: GINA VENGLASS, P.E.

DURANGO HILLS RELIEF SEWER PROJECT

CITY OF LAS VEGAS NEVADA

CH2MHILL®
2485 VILLAGE VIEW DRIVE, SUITE 350, HENDERSON, NV 89074
PHONE 702-308-9175, CH2M HILL Project #240088

RECORD OF SURVEY

Sheet G4
4 of 35
DATE April 2014
DWG NO. 307V1045

FILE NAME: 413450HRS_G04.DWG

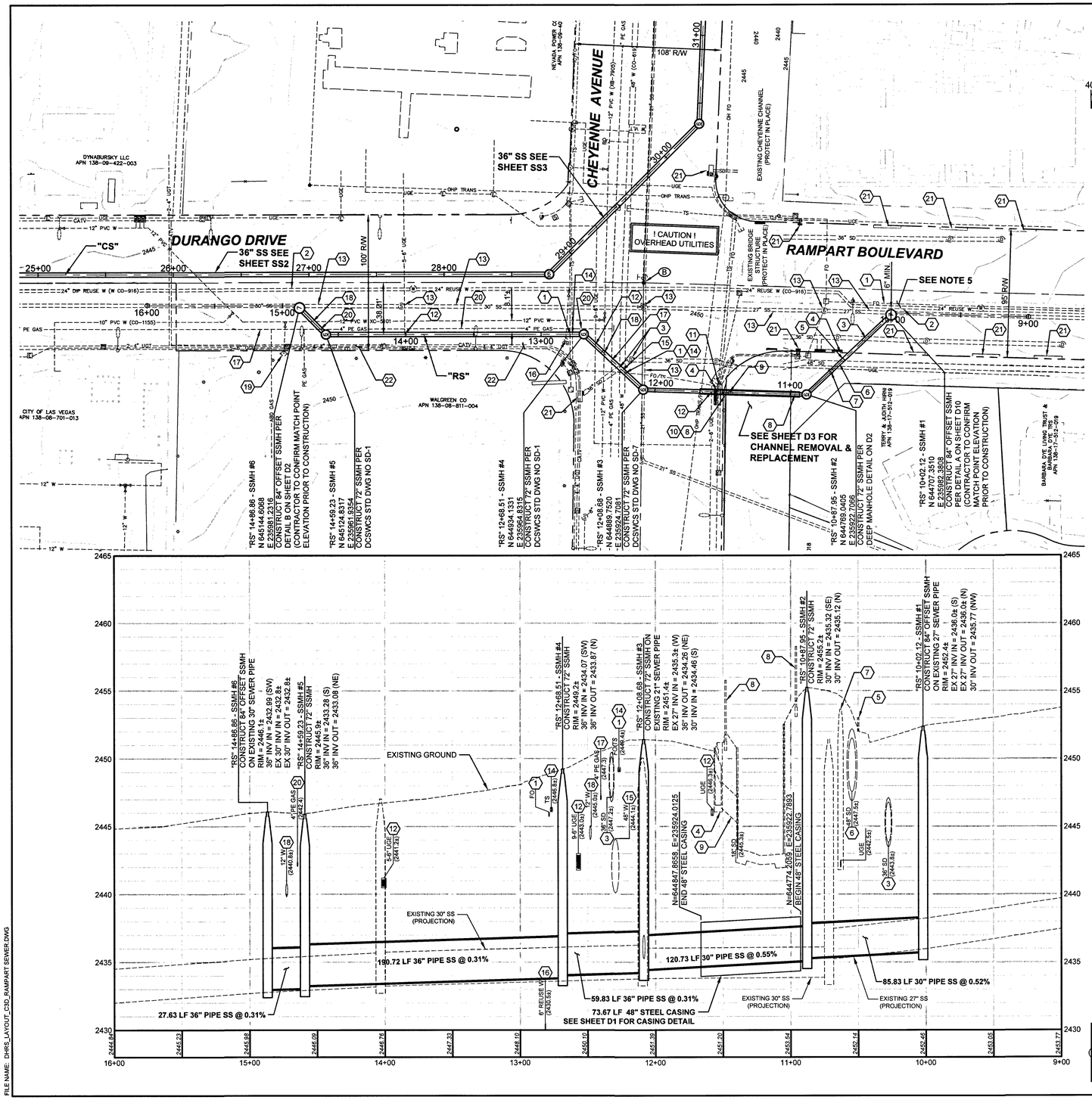

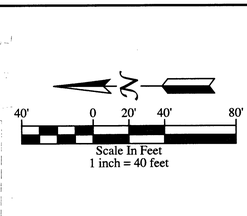

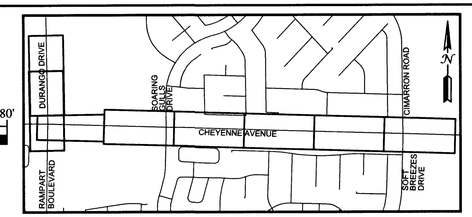

KEY MAP

MISCELLANEOUS CONSTRUCTION NOTES:

1. EXISTING FO (PROTECT IN-PLACE)
2. EXISTING 24" REUSE W (PROTECT IN-PLACE)
3. EXISTING 36" SD AND SDMH (PROTECT IN-PLACE)
4. EXISTING DROP INLET TO BE REMOVED AND REPLACED SEE SHEET D3
5. EXISTING STEM WALL TO BE REMOVED AND REPLACED SEE SHEET D3
6. EXISTING 48" SD (PROTECT IN-PLACE)
7. EXISTING ELEC MH (TO BE RELOCATED BY OTHERS)
8. EXISTING CMU WALL TO BE REMOVED AND REPLACED SEE SHEET D3
9. EXISTING 18" STORM DRAIN PIPE TO BE REMOVED AND REPLACED SEE SHEET D3
10. EXISTING WROUGHT IRON FENCE TO BE REMOVED AND REPLACED SEE SHEET D3
11. EXISTING TRAFFIC SIGNAL BOX TO BE REMOVED AND REPLACED SEE TS SHEETS FOR CONDUIT WIRE SCHEDULE
12. EXISTING UGE (PROTECT IN-PLACE)
13. FOR PROTECTION AND ABANDONMENT OF EXISTING SEWER SEE SHEETS SS2 AND SS3
14. EXISTING TS (PROTECT IN-PLACE OR ADJUST AS NECESSARY PER SPECIFICATION SECTION 623. COST OF ADJUSTING TRAFFIC SIGNAL CONDUIT IS INCIDENTAL TO CONSTRUCTION. SEE TS SHEETS FOR CONDUIT AND WIRE SCHEDULE)
15. EXISTING 48" W (PROTECT IN-PLACE PER SPECIFICATION SECTION 629)
16. EXISTING BLOW OFF VALVE, PROTECT VALVE IN PLACE AND ADJUST COVER TO GRADE PER UDACS PLATE 37 (THIS IS AN ACTIVE BLOWOFF ASSEMBLY AND MAY NOT BE SHUTDOWN FOR ANY REASON)
17. EXISTING 4" PE GAS (PROTECT IN-PLACE)
18. EXISTING 12" W (PROTECT IN-PLACE PER SPECIFICATION SECTION 629)
19. EXISTING FIRE HYDRANT (PROTECT IN-PLACE)
20. EXISTING 4" PE GAS TO BE RELOCATED BY SWG CONCURRENT WITH CONSTRUCTION PER SPECIFICATION SECTION 105.06.
21. EXISTING STORM DRAIN DROP INLET (PROTECT IN-PLACE)
22. EXISTING CURB, GUTTER, AND SIDEWALK (PROTECT IN-PLACE OR REMOVE AND REPLACE AS NECESSARY FOR CONSTRUCTION AT NO ADDITIONAL COST TO THE OWNER)

NOTES:

1. CONTRACTOR SHALL VERIFY ALL HORIZONTAL AND VERTICAL LOCATIONS OF EXISTING FACILITIES BEING TIED INTO OR CROSSING PRIOR TO ANY WORK BEING DONE. CONTRACTOR SHALL COORDINATE ANY DISCREPANCIES WITH THE ENGINEER.
2. LINEAR FOOTAGE (LF), SLOPES, AND INVERTS OF SANITARY SEWER PIPES AS SHOWN ON THE PLANS ARE CALCULATED HORIZONTALLY FROM CENTERLINE OF MANHOLE TO CENTERLINE OF MANHOLE.
3. SEE PR1-PR4 & D3 SHEETS FOR PAVEMENT, CURB, GUTTER, SIDEWALK, MEDIAN AND LANDSCAPING REMOVAL/REPLACEMENT LIMITS
4. ALL WATERLINES CROSSING TRENCH WIDTHS GREATER THAN 6 FT. SHALL HAVE A PIPE SUPPORT DETAIL SUBMITTED TO THE DISTRICT FOR APPROVAL PRIOR TO EXCAVATION.
5. IN AREAS WHERE THE EXCAVATION OR GROUND ELEVATION IS LESS THAN THREE FEET (3 FT) FROM THE TOP OF THE LVVWD 24" MLCP RECYCLED WATER TRANSMISSION MAIN, NO EXCAVATION EQUIPMENT, OTHER THAN HAND HELD EQUIPMENT WILL BE ALLOWED WITHIN TEN FEET (10 FT) OF THE PIPELINE IN THESE AREAS. CONTRACTOR TO PLACE A CONCRETE BARRIER, I.E. JERSEY-RAIL, TO IDENTIFY THE NO EQUIPMENT ZONE.

SURVEY MONUMENTS*

CAP	NORTHING	EASTING	SHEET	LOCATION
(A)	646269.054	235982.787	D4	DURANGO
(B)	644890.462	236003.688	D4/SS1/SS3	DURANGO/CHEYENNE
(C)	644850.889	237356.533	SS4	SOARING GULLS/CHEYENNE
(D)	644822.546	238370.795	SS6	CHEYENNE
(E)	644813.051	238708.917	SS6	CHEYENNE
(F)	644793.793	239384.528	SS7	CHEYENNE
(G)	644784.194	239722.379	SS7	CHEYENNE
(H)	644774.532	240060.098	SS8	CIMARRON/CHEYENNE

*SEE CITY OF LAS VEGAS GENERAL NOTE #13 ON SHEET G3

APPROVED FOR CONSTRUCTION
Las Vegas Valley Water District Engineering Services Manager
Date 04/29/14 Project No. 115833

FAST
Call before you UnderGround
1-702-432-5300
FREEWAY AND ARTERIAL SYSTEM OF TRANSPORTATION

AVOID OVERHEAD POWER LINE CONTACT. IT'S COSTLY.
Call before you Overhead
1-702-227-2929
NV ENERGY ENVIRONMENT AND SAFETY SERVICES DEPARTMENT

Call before you Dig
AVOID CUTTING UNDERGROUND UTILITY LINES. IT'S COSTLY.
Call 811

HANSEN #29930

NO.	DATE	REVISION	BY	APVD

DSGN M. WARNICK | DR D. PUBLOW | CHK CH2M HILL | APVD J. GRIEST

DEPARTMENT OF PUBLIC WORKS
ENGINEERING DESIGN SECTION
CITY ENGINEER: DAVID N. BOWERS, P.E.
PROJECT MANAGER: GINA VENGLASS, P.E.
DURANGO HILLS RELIEF SEWER PROJECT

CITY OF LAS VEGAS NEVADA

CH2MHILL®
2485 VILLAGE VIEW DRIVE, SUITE 350, HENDERSON, NV 89074
PHONE 702-369-6175, CH2M HILL Project #240066

SANITARY SEWER DESIGN
PLAN AND PROFILE
"RS" 10+00 TO "RS" 15+00

PROFESSIONAL ENGINEER - STATE OF NEVADA
JEFFREY N. GRIEST
EXP. 06/30/15
CIVIL
No. 17156
4-29-14

Sheet SS1
5 of 35
DATE April 2014
DWG NO. 307V1045

FILE NAME: DHRS_LAYOUT_C3D_RAMPART SEWER.DWG

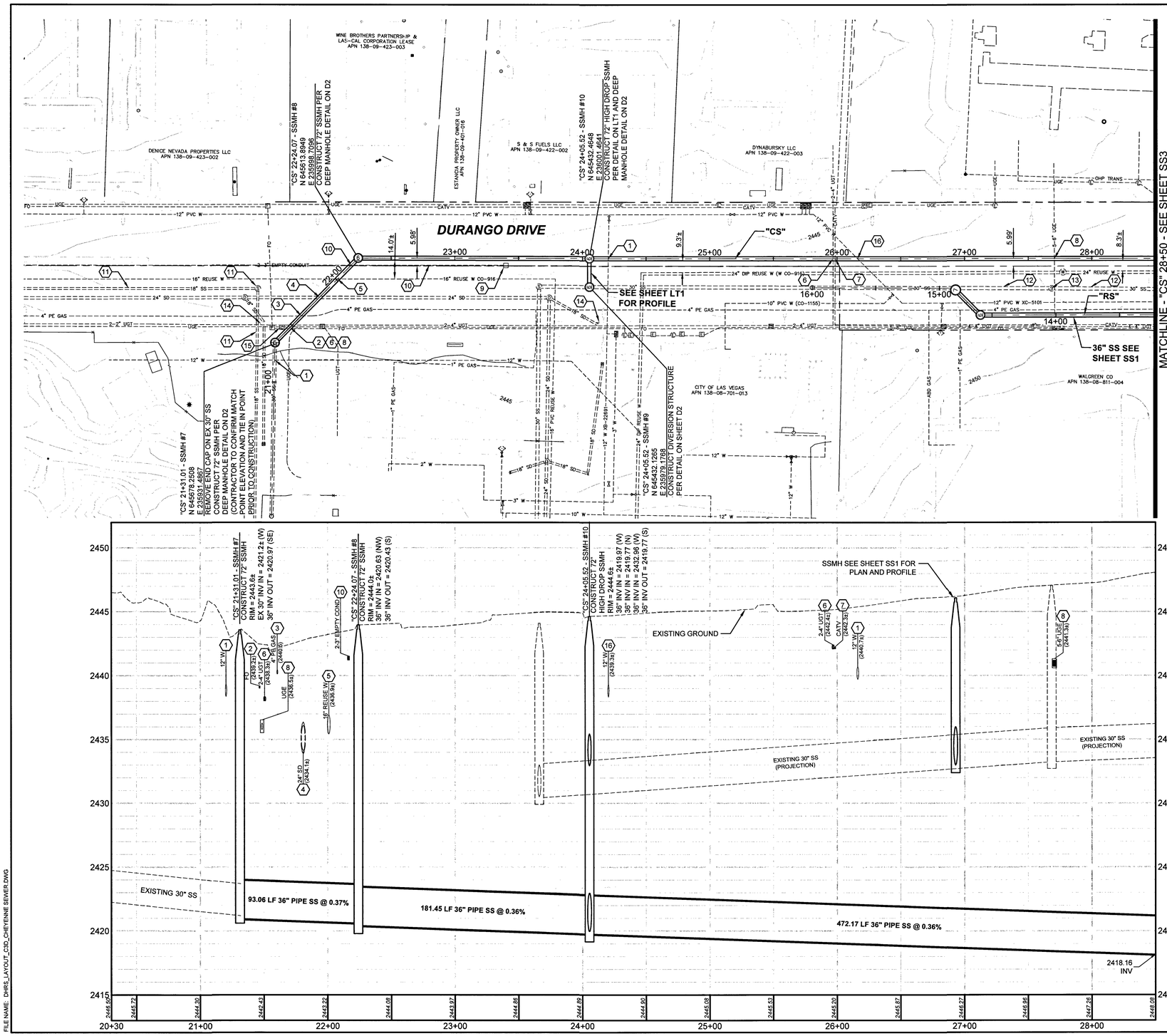

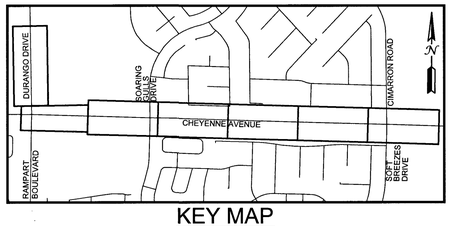

KEY MAP

40' 0 20' 40' 80'

Scale In Feet
1 inch = 40 feet

MISCELLANEOUS CONSTRUCTION NOTES:

1. EXISTING 12" W (PROTECT IN-PLACE)
2. EXISTING FO (PROTECT IN-PLACE)
3. EXISTING 4" PE GAS (PROTECT IN-PLACE)
4. EXISTING 24" SD (PROTECT IN-PLACE)
5. EXISTING 16" REUSE W (PROTECT IN-PLACE PER SPECIFICATION SECTION 629)
6. EXISTING UGT (PROTECT IN-PLACE)
7. EXISTING CATV (PROTECT IN-PLACE)
8. EXISTING UGE (PROTECT IN-PLACE)
9. REMOVE AND REPLACE EXISTING #5 PULL BOX
10. REPLACE 130± LF OF (2)3" EXISTING EMPTY CONDUIT
11. SEE SHEET D4 FOR SEWER ABANDONMENT
12. EXISTING 30" SS (PROTECT IN-PLACE)
13. EXISTING SSMH (PROTECT IN-PLACE)
14. EXISTING STORM DRAIN DROP INLET (PROTECT IN-PLACE)
15. EXISTING CATV PULL BOX (TO BE RELOCATED BY OTHERS)
16. EXISTING 12" W (PROTECT IN-PLACE PER SPECIFICATION SECTION 629)

SURVEY MONUMENTS*

CAP	NORTHING	EASTING	SHEET	LOCATION
A	646269.054	235982.787	D4	DURANGO
B	644890.462	236003.688	D4/SS2/SS3	DURANGO/CHEYENNE
C	644850.889	237356.533	SS4	SOARING GULLS/CHEYENNE
D	644822.546	238370.795	SS6	CHEYENNE
E	644813.051	238708.917	SS6	CHEYENNE
F	644793.793	239384.528	SS7	CHEYENNE
G	644784.194	239722.379	SS7	CHEYENNE
H	644774.532	240060.098	SS8	CIMARRON/CHEYENNE

*SEE CITY OF LAS VEGAS GENERAL NOTE #13 ON SHEET G3

NOTES:

1. CONTRACTOR SHALL VERIFY ALL HORIZONTAL AND VERTICAL LOCATIONS OF EXISTING FACILITIES BEING TIED INTO OR CROSSING PRIOR TO ANY WORK BEING DONE. CONTRACTOR SHALL COORDINATE ANY DISCREPANCIES WITH THE ENGINEER.
2. LINEAR FOOTAGE (LF), SLOPES, AND INVERTS OF SANITARY SEWER PIPES AS SHOWN ON THE PLANS ARE CALCULATED HORIZONTALLY FROM CENTERLINE OF MANHOLE TO CENTERLINE OF MANHOLE.
3. REFER TO SHEET D4 FOR MODIFICATION OF EXISTING ONSITE HIGH DROP MANHOLE.
4. SEE PR1- PR4 & D3 SHEETS FOR PAVEMENT, CURB, GUTTER, SIDEWALK, MEDIAN AND LANDSCAPING REMOVAL/REPLACEMENT LIMITS.
5. ALL WATERLINES CROSSING TRENCH WIDTHS GREATER THAN 6 FT. SHALL HAVE A PIPE SUPPORT DETAIL SUBMITTED TO THE DISTRICT FOR APPROVAL PRIOR TO EXCAVATION.

APPROVED FOR CONSTRUCTION
Las Vegas Valley Water District Engineering Services Manager
Date 04/29/14 Project No. 115833

FAST
Call before you UnderGround
1-702-432-5300
FREEWAY AND ARTERIAL SYSTEM OF TRANSPORTATION

AVOID OVERHEAD POWER LINE CONTACT. IT'S COSTLY.
Call before you Overhead
1-702-227-2929
NV ENERGY ENVIRONMENT AND SAFETY SERVICES DEPARTMENT

Call before you Dig
AVOID CUTTING UNDERGROUND UTILITY LINES. IT'S COSTLY.
Call 811

HANSEN #29930

NO.	DATE	REVISION	BY	APVD

DSGN M. WARNICK | DR D. PUBLOW | CHK CH2M HILL | APVD J. GRIEST

DEPARTMENT OF PUBLIC WORKS
ENGINEERING DESIGN SECTION
CITY ENGINEER: DAVID N. BOWERS, P.E.
PROJECT MANAGER: GINA VENGLASS, P.E.

DURANGO HILLS RELIEF SEWER PROJECT

CH2MHILL®
2485 VILLAGE VIEW DRIVE, SUITE 350, HENDERSON, NV 89074
PHONE 702-369-6175, CH2M HILL Project #240066

SANITARY SEWER DESIGN
PLAN AND PROFILE
"CS" 20+30 TO "CS" 28+50

PROFESSIONAL ENGINEER - STATE OF NEVADA
JEFFREY N. GRIEST
EXP. 06/30/15
CIVIL
No. 17156
4-22-14

Sheet SS2
6 of 35
DATE April 2014
DWG NO. 307V1045

FILE NAME: DHRS_LAYOUT_C3D_CHEYENNE SEWER.DWG

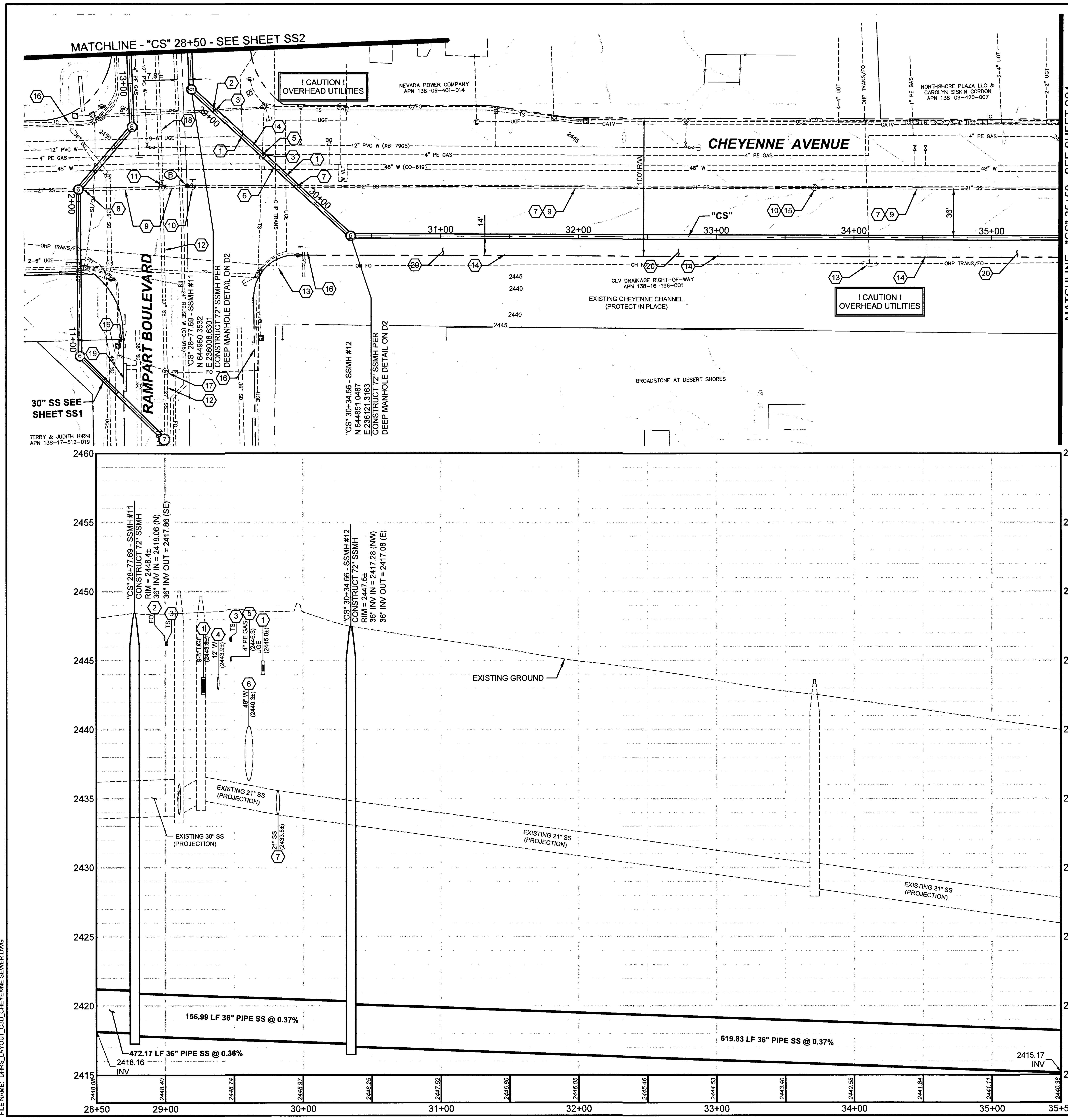

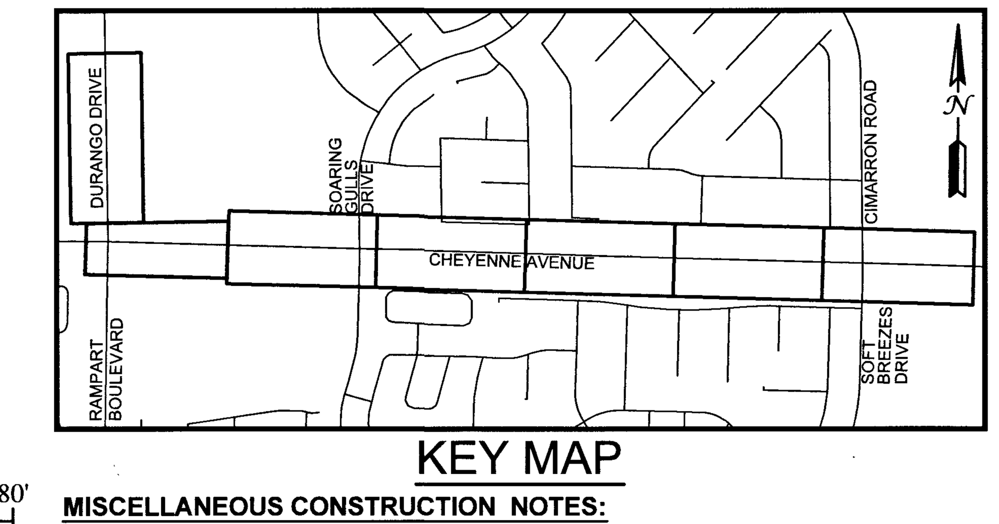

KEY MAP

Scale In Feet
1 inch = 40 feet

MISCELLANEOUS CONSTRUCTION NOTES:

1. EXISTING UGE (PROTECT IN-PLACE)
2. EXISTING FO (PROTECT IN-PLACE)
3. EXISTING TS (PROTECT IN-PLACE OR ADJUST AS NECESSARY PER SPECIFICATION SECTION 623. COST OF ADJUSTING TRAFFIC SIGNAL CONDUIT IS INCIDENTAL TO CONSTRUCTION. SEE TS SHEETS FOR CONDUIT AND WIRE SCHEDULE.)
4. EXISTING 12" W(PROTECT IN-PLACE PER SPECIFICATION SECTION 629)
5. EXISTING 4" PE GAS (PROTECT IN-PLACE)
6. EXISTING 48" W(PROTECT IN-PLACE PER SPECIFICATION SECTION 629)
7. EXISTING 21" SS (PROTECT IN-PLACE DURING SS CONST. THEN TO BE ABANDONED ONCE RELIEF SEWER IS ACTIVE)
8. CAP EXISTING 21" SS AT NEW MANHOLE AND ABANDON SEWER TO THE EAST PER SPECIFICATION 630
9. ABANDON 21" SS PER SPECIFICATION SECTION 630 (715 LF THIS SHEET)
10. ABANDON SSMH PER SPECIFICATION SECTION 630
N = 644890.05, E = 236007.70
N = 644877.29, E = 236458.78
11. MODIFY EXISTING CHEYENNE/DURANGO DIVERSION STRUCTURE PER DETAIL ON D10
12. EXISTING 27" SS (PROTECT IN-PLACE)
13. EXISTING POWER POLE (PROTECT IN-PLACE PER SPECIFICATION SECTION 650)
14. EXISTING STREET LIGHT (PROTECT IN-PLACE)
15. EXISTING SSMH (PROTECT IN-PLACE DURING SS CONT. THEN TO BE ABANDONED ONCE RELIEF SEWER IS ACTIVE)
16. EXISTING STORM DRAIN DROP INLET (PROTECT IN-PLACE)
17. EXISTING SSMH (PROTECT IN-PLACE)
18. EXISTING 30" SS (PROTECT IN-PLACE)
19. EXISTING DROP INLET TO BE REMOVED AND REPLACED SEE SHEET D3.
20. EXISTING CURB, GUTTER, AND SIDEWALK (PROTECT IN-PLACE OR REMOVE AND REPLACE AS NECESSARY FOR CONSTRUCTION AT NO ADDITIONAL COST TO THE OWNER)

SURVEY MONUMENTS*				
CAP	NORTHING	EASTING	SHEET	LOCATION
A	646269.054	235982.787	D4	DURANGO
B	644890.462	236003.688	D4/SS2/SS3	DURANGO/CHEYENNE
C	644850.889	237356.533	SS4	SOARING GULLS/CHEYENNE
D	644822.546	238370.795	SS6	CHEYENNE
E	644813.051	238708.917	SS6	CHEYENNE
F	644793.793	239384.528	SS7	CHEYENNE
G	644784.194	239722.379	SS7	CHEYENNE
H	644774.532	240060.098	SS8	CIMARRON/CHEYENNE

*SEE CITY OF LAS VEGAS GENERAL NOTE #13 ON SHEET G3

NOTES:

1. CONTRACTOR SHALL VERIFY ALL HORIZONTAL AND VERTICAL LOCATIONS OF EXISTING FACILITIES BEING TIED INTO OR CROSSING PRIOR TO ANY WORK BEING DONE. CONTRACTOR SHALL COORDINATE ANY DISCREPANCIES WITH THE ENGINEER.
2. LINEAR FOOTAGE (LF), SLOPES, AND INVERTS OF SANITARY SEWER PIPES AS SHOWN ON THE PLANS ARE CALCULATED HORIZONTALLY FROM CENTERLINE OF MANHOLE TO CENTERLINE OF MANHOLE.
3. SEE PR1-PR4 & D3 SHEETS FOR PAVEMENT, CURB, GUTTER, SIDEWALK, MEDIAN AND LANDSCAPING REMOVAL/REPLACEMENT LIMITS
4. ALL WATERLINES CROSSING TRENCH WIDTHS GREATER THAN 6 FT. SHALL HAVE A PIPE SUPPORT DETAIL SUBMITTED TO THE DISTRICT FOR APPROVAL PRIOR TO EXCAVATION.

APPROVED FOR CONSTRUCTION
Las Vegas Valley Water District Engineering Services Manager
Date 4/29/14 Project No. 115833

FAST Call before you UnderGround 1-702-432-5300 FREEWAY AND ARTERIAL SYSTEM OF TRANSPORTATION

AVOID OVERHEAD POWER LINE CONTACT. IT'S COSTLY. Call before you Overhead 1-702-227-2929 NV ENERGY ENVIRONMENT AND SAFETY SERVICES DEPARTMENT

Call before you Dig AVOID CUTTING UNDERGROUND UTILITY LINES. IT'S COSTLY. Call 811

HANSEN #29930

NO.	DATE	REVISION	BY	APVD
DSGN M. WARNICK	DR D. PUBLOW	CHK CH2M HILL	APVD J. GRIEST

DEPARTMENT OF PUBLIC WORKS
ENGINEERING DESIGN SECTION
CITY ENGINEER : DAVID N. BOWERS, P.E.
PROJECT MANAGER : GINA VENGLASS, P.E.

CITY OF LAS VEGAS NEVADA

DURANGO HILLS RELIEF SEWER PROJECT

CH2MHILL®
2485 VILLAGE VIEW DRIVE, SUITE 350, HENDERSON, NV 89074
PHONE 702-369-6175, CH2M HILL Project #240066

SANITARY SEWER DESIGN PLAN AND PROFILE "CS" 28+50 TO "CS" 35+50

PROFESSIONAL ENGINEER - STATE OF NEVADA
JEFFREY N. GRIEST
EXP. 06/30/15
CIVIL
No. 17156
4-22-14

Sheet SS3
7 of 35
DATE April 2014
DWG NO. 307V1045

FILE NAME: DHRS_LAYOUT_C3D_CHEYENNE SEWER.DWG

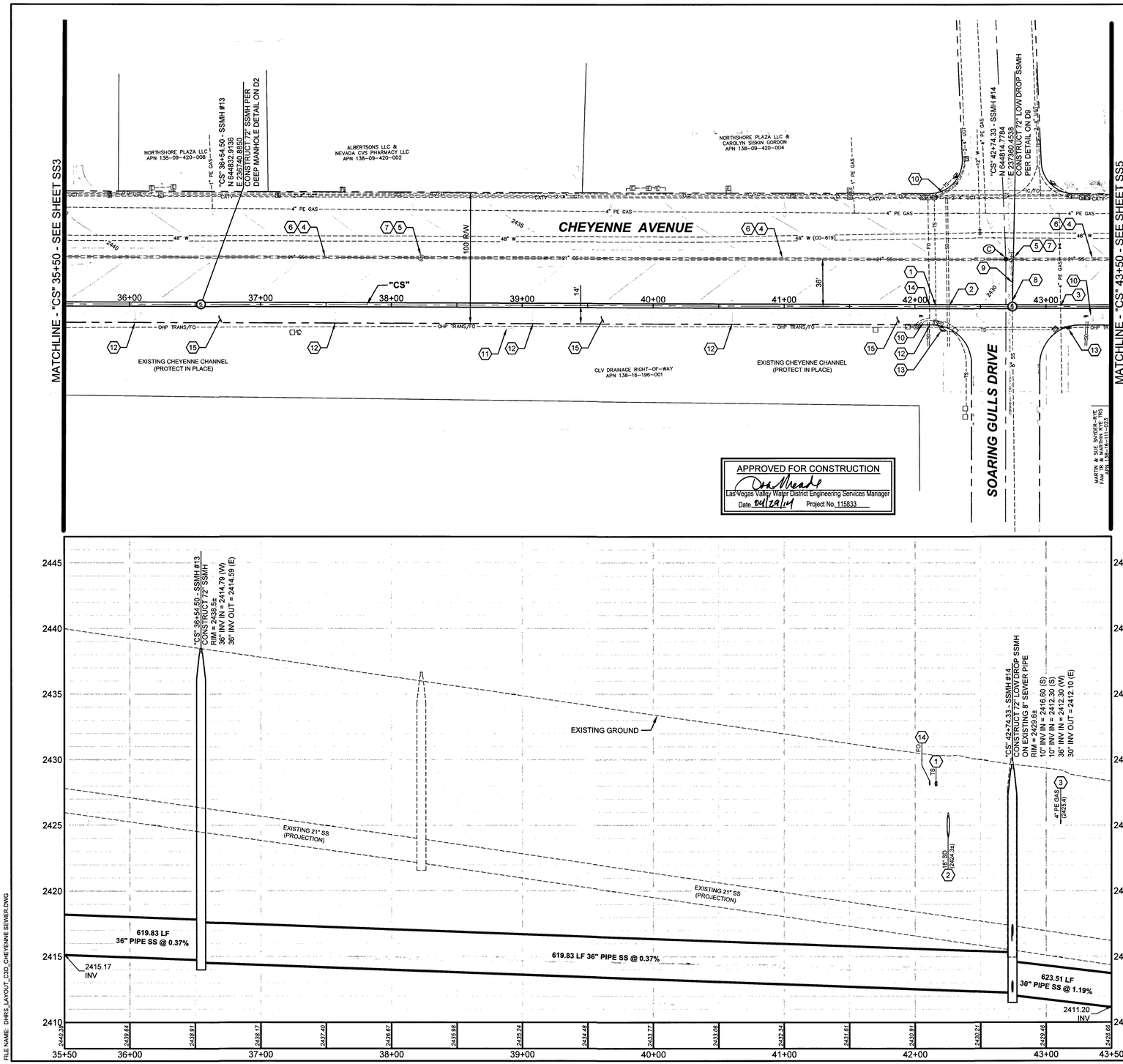

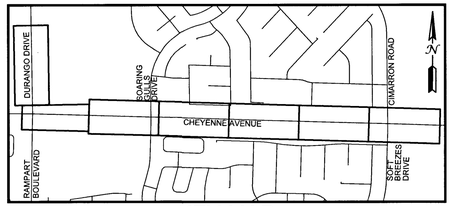

KEY MAP

40' 0 20' 40' 80'

Scale In Feet
1 inch = 40 feet

MISCELLANEOUS CONSTRUCTION NOTES:

1. EXISTING TS (PROTECT IN-PLACE OR ADJUST AS NECESSARY PER SPECIFICATION SECTION 623. COST OF ADJUSTING TRAFFIC SIGNAL CONDUIT IS INCIDENTAL TO CONSTRUCTION. SEE TS SHEETS FOR CONDUIT AND WIRE SCHEDULE.)
2. EXISTING SD (PROTECT IN-PLACE)
3. EXISTING 4" PE GAS (PROTECT IN-PLACE)
4. ABANDON 21" SS PER SPECIFICATION SECTION 630 (800 LF THIS SHEET)
5. ABANDON SSMH PER SPECIFICATION SECTION 630
   N = 644863.72, E= 236910.15
   N= 644850.88, E = 237361.02
6. EXISTING 21" SS (PROTECT IN-PLACE DURING SS CONST. THEN TO BE ABANDONED ONCE RELIEF SEWER IS ACTIVE)
7. EXISTING SSMH (PROTECT IN-PLACE DURING SS CONST. THEN TO BE ABANDONED ONCE RELIEF SEWER IS ACTIVE)
8. REMOVE 7' OF 8" SS ACROSS SSMH
9. ABANDON 8" SS PER SPECIFICATION SECTION 630 (30 LF)
10. EXISTING STORM DRAIN DROP INLET (PROTECT IN-PLACE)
11. EXISTING POWER POLE (PROTECT IN-PLACE PER SPECIFICATION SECTION 650)
12. EXISTING STREET LIGHT (PROTECT IN-PLACE)
13. EXISTING SIGNAL POLE (PROTECT IN-PLACE)
14. EXISTING FO (PROTECT IN-PLACE)
15. EXISTING CURB, GUTTER, AND SIDEWALK (PROTECT IN-PLACE OR REMOVE AND REPLACE AS NECESSARY FOR CONSTRUCTION AT NO ADDITIONAL COST TO THE OWNER)

SURVEY MONUMENTS*

CAP	NORTHING	EASTING	SHEET	LOCATION
A	646269.054	235982.787	D4	DURANGO
B	644890.462	236003.688	D4/SS2/SS3	DURANGO/CHEYENNE
C	644850.889	237356.533	SS4	SOARING GULLS/CHEYENNE
D	644822.546	238370.795	SS6	CHEYENNE
E	644813.051	238708.917	SS6	CHEYENNE
F	644793.793	239384.528	SS7	CHEYENNE
G	644784.194	239722.379	SS7	CHEYENNE
H	644774.532	240060.098	SS8	CIMARRON/CHEYENNE

*SEE CITY OF LAS VEGAS GENERAL NOTE #13 ON SHEET G3

NOTES:

1. CONTRACTOR SHALL VERIFY ALL HORIZONTAL AND VERTICAL LOCATIONS OF EXISTING FACILITIES BEING TIED INTO OR CROSSING PRIOR TO ANY WORK BEING DONE. CONTRACTOR SHALL COORDINATE ANY DISCREPANCIES WITH THE ENGINEER.
2. LINEAR FOOTAGE (LF), SLOPES, AND INVERTS OF SANITARY SEWER PIPES AS SHOWN ON THE PLANS ARE CALCULATED HORIZONTALLY FROM CENTERLINE OF MANHOLE TO CENTERLINE OF MANHOLE.
3. SEE PR1-PR4 & D3 SHEETS FOR PAVEMENT, CURB, GUTTER, SIDEWALK, MEDIAN AND LANDSCAPING REMOVAL/REPLACEMENT LIMITS
4. ALL WATERLINES CROSSING TRENCH WIDTHS GREATER THAN 6 FT. SHALL HAVE A PIPE SUPPORT DETAIL SUBMITTED TO THE DISTRICT FOR APPROVAL PRIOR TO EXCAVATION.

FAST
Call before you UnderGround
1-702-432-5300
FREEWAY AND ARTERIAL SYSTEM OF TRANSPORTATION

AVOID OVERHEAD POWER LINE CONTACT. IT'S COSTLY.
Call before you Overhead
1-702-227-2929
NV ENERGY ENVIRONMENT AND SAFETY SERVICES DEPARTMENT

Call before you Dig
AVOID CUTTING UNDERGROUND UTILITY LINES. IT'S COSTLY.
Call 811

HANSEN #29930

NO.	DATE	REVISION	BY	APVD

DSGN M. WARNICK | DR D. PUBLOW | CHK CH2M HILL | APVD J. GRIEST

DEPARTMENT OF PUBLIC WORKS
ENGINEERING DESIGN SECTION
CITY ENGINEER : DAVID N. BOWERS, P.E.
PROJECT MANAGER : GINA VENGLASS, P.E.

DURANGO HILLS
RELIEF SEWER PROJECT

CITY OF LAS VEGAS NEVADA

CH2MHILL®
2485 VILLAGE VIEW DRIVE, SUITE 350, HENDERSON, NV 89074
PHONE 702-398-9175, CH2M HILL Project #240088

SANITARY SEWER DESIGN
PLAN AND PROFILE
"CS" 35+50 TO "CS" 43+50

PROFESSIONAL ENGINEER - STATE OF NEVADA
JEFFREY N GRIEST
EXP. 06/30/15
CIVIL
No. 17166
4-22-14

Sheet SS4
8 of 35
DATE April 2014
DWG NO. 307V1045

FILE NAME: DHRS_LAYOUT_C3D_CHEYENNE SEWER.DWG

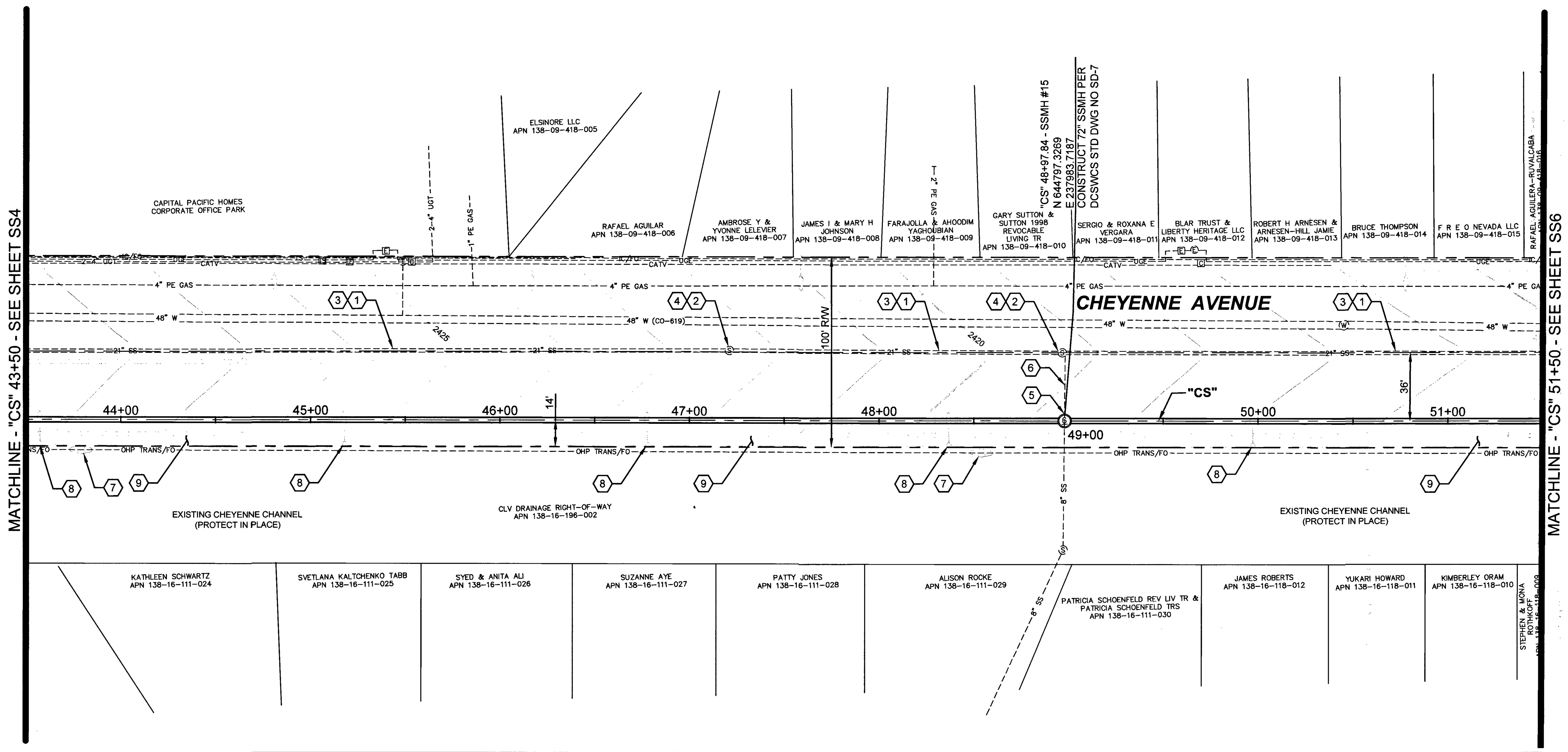

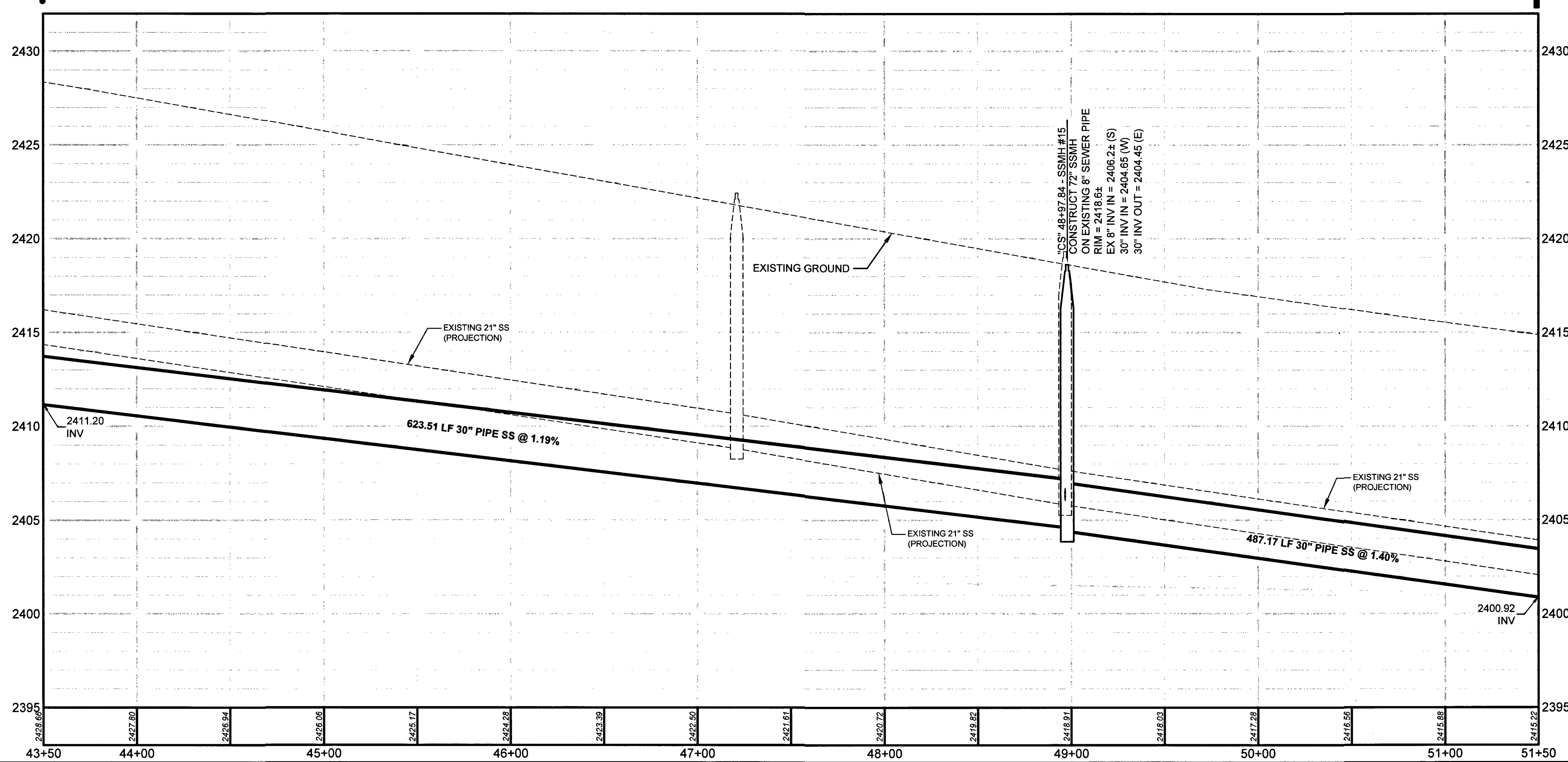

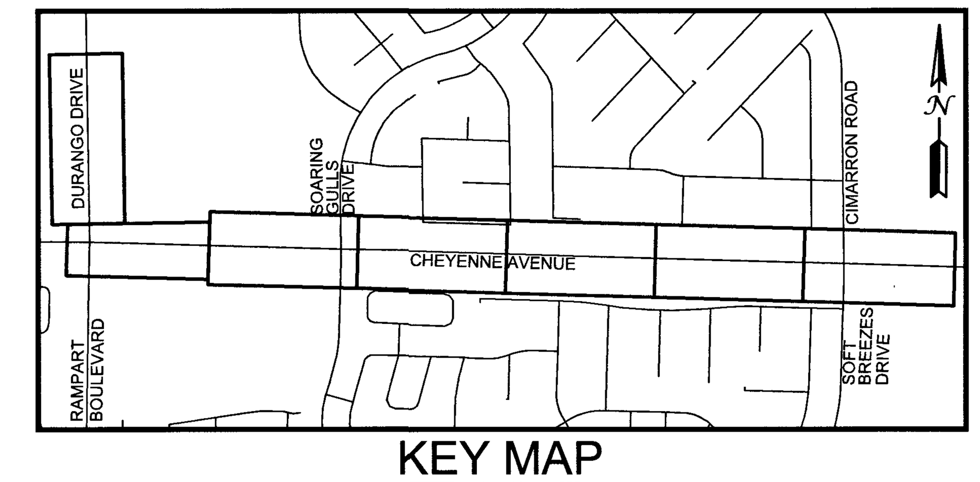

KEY MAP

40' 0 20' 40' 80'
Scale In Feet
1 inch = 40 feet

MISCELLANEOUS CONSTRUCTION NOTES:

1. ABANDON 21" SS PER SPECIFICATION SECTION 630 (800 LF THIS SHEET)
2. ABANDON SSMH PER SPECIFICATION SECTION 630
   N = 644838.96, E = 237808.08
   N = 644833.27, E = 237983.52
3. EXISTING 21" SS (PROTECT IN-PLACE DURING SS CONST. THEN TO BE ABANDONED ONCE RELIEF SEWER IS ACTIVE)
4. EXISTING SSMH (PROTECT IN-PLACE DURING SS CONST. THEN TO BE ABANDONED ONCE RELIEF SEWER IS ACTIVE)
5. REMOVE 7' OF 8" SS ACROSS SSMH
6. ABANDON 8" SS PER SPECIFICATION SECTION 630 (30 LF)
7. EXISTING POWER POLE (PROTECT IN-PLACE PER SPECIFICATION SECTION 650)
8. EXISTING STREET LIGHT (PROTECT IN-PLACE)
9. EXISTING CURB, GUTTER, AND SIDEWALK (PROTECT IN-PLACE OR REMOVE AND REPLACE AS NECESSARY FOR CONSTRUCTION AT NO ADDITIONAL COST TO THE OWNER)

SURVEY MONUMENTS*

CAP	NORTHING	EASTING	SHEET	LOCATION
A	646269.054	235982.787	D4	DURANGO
B	644890.462	236003.688	D4/SS2/SS3	DURANGO/CHEYENNE
C	644850.889	237356.533	SS4	SOARING GULLS/CHEYENNE
D	644822.546	238370.795	SS6	CHEYENNE
E	644813.051	238708.917	SS6	CHEYENNE
F	644793.793	239384.528	SS7	CHEYENNE
G	644784.194	239722.379	SS7	CHEYENNE
H	644774.532	240060.098	SS8	CIMARRON/CHEYENNE

*SEE CITY OF LAS VEGAS GENERAL NOTE #13 ON SHEET G3

NOTES:

1. CONTRACTOR SHALL VERIFY ALL HORIZONTAL AND VERTICAL LOCATIONS OF EXISTING FACILITIES BEING TIED INTO OR CROSSING PRIOR TO ANY WORK BEING DONE. CONTRACTOR SHALL COORDINATE ANY DISCREPANCIES WITH THE ENGINEER.
2. LINEAR FOOTAGE (LF), SLOPES, AND INVERTS OF SANITARY SEWER PIPES AS SHOWN ON THE PLANS ARE CALCULATED HORIZONTALLY FROM CENTERLINE OF MANHOLE TO CENTERLINE OF MANHOLE.
3. SEE PR1-PR4 & D3 SHEETS FOR PAVEMENT, CURB, GUTTER, SIDEWALK, MEDIAN AND LANDSCAPING REMOVAL/REPLACEMENT LIMITS
4. ALL WATERLINES CROSSING TRENCH WIDTHS GREATER THAN 6 FT. SHALL HAVE A PIPE SUPPORT DETAIL SUBMITTED TO THE DISTRICT FOR APPROVAL PRIOR TO EXCAVATION.

APPROVED FOR CONSTRUCTION
Las Vegas Valley Water District Engineering Services Manager
Date 04/29/14 Project No. 115833

FAST Call before you UnderGround 1-702-432-5300
FREEWAY AND ARTERIAL SYSTEM OF TRANSPORTATION

AVOID OVERHEAD POWER LINE CONTACT. IT'S COSTLY.
Call before you Overhead 1-702-227-2929
NV ENERGY ENVIRONMENTAL AND SAFETY SERVICES DEPARTMENT

Call before you Dig
AVOID CUTTING UNDERGROUND UTILITY LINES. IT'S COSTLY.
Call 811

HANSEN #29930

NO.	DATE	REVISION	BY	APVD
DSGN M. WARNICK	DR D. PUBLOW	CHK CH2M HILL	APVD J. GRIEST	

DEPARTMENT OF PUBLIC WORKS
ENGINEERING DESIGN SECTION

CITY ENGINEER : DAVID N. BOWERS, P.E.
PROJECT MANAGER : GINA VENGLASS, P.E.

DURANGO HILLS RELIEF SEWER PROJECT

CITY OF LAS VEGAS NEVADA

CH2MHILL®
2485 VILLAGE VIEW DRIVE, SUITE 350, HENDERSON, NV 89074
PHONE 702-369-6175, CH2M HILL Project #240066

SANITARY SEWER DESIGN PLAN AND PROFILE "CS"43+50 TO "CS" 51+50

PROFESSIONAL ENGINEER - STATE OF NEVADA
JEFFREY N. GRIEST
EXP. 06/30/15
CIVIL
No. 17156
4-22-14

Sheet SS5
9 of 35

DATE April 2014
DWG NO. 307V1045

FILE NAME: DHRS_LAYOUT_C3D_CHEYENNE SEWER.DWG

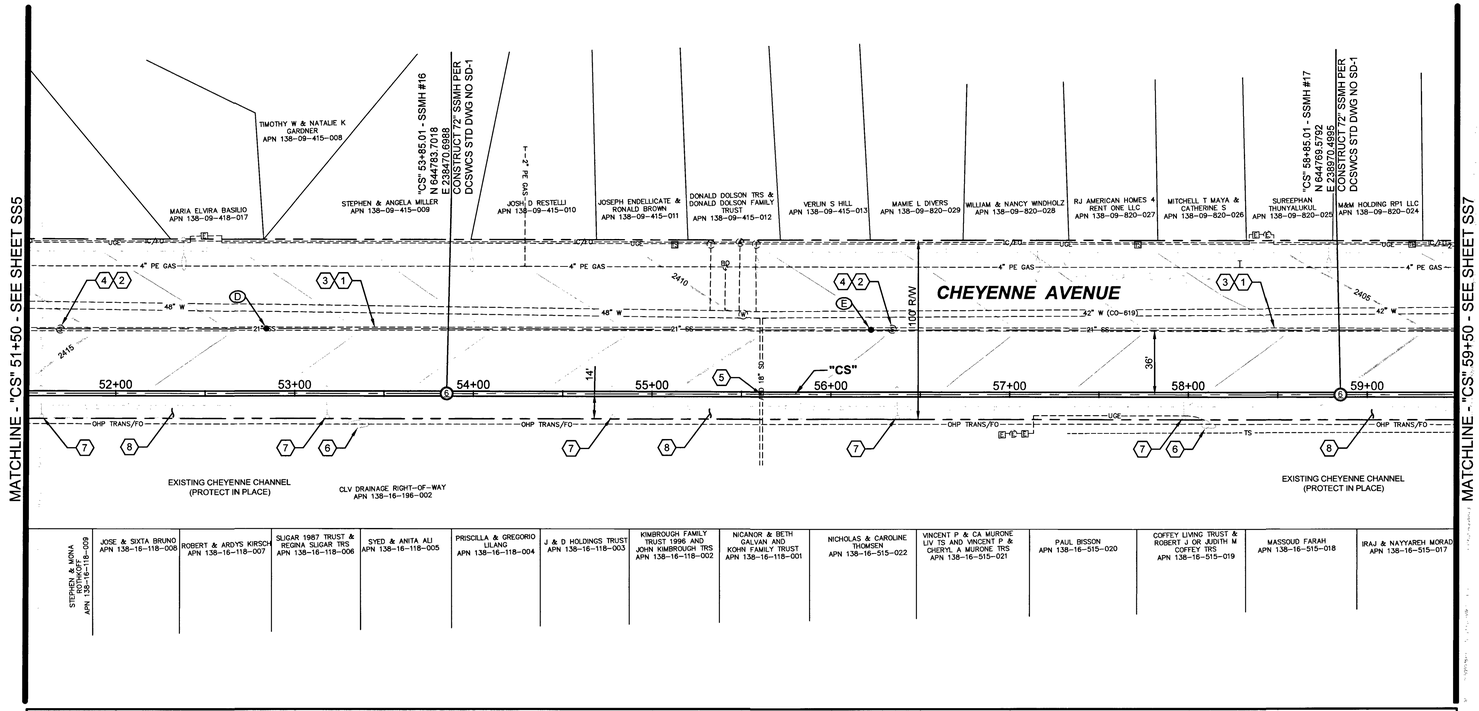

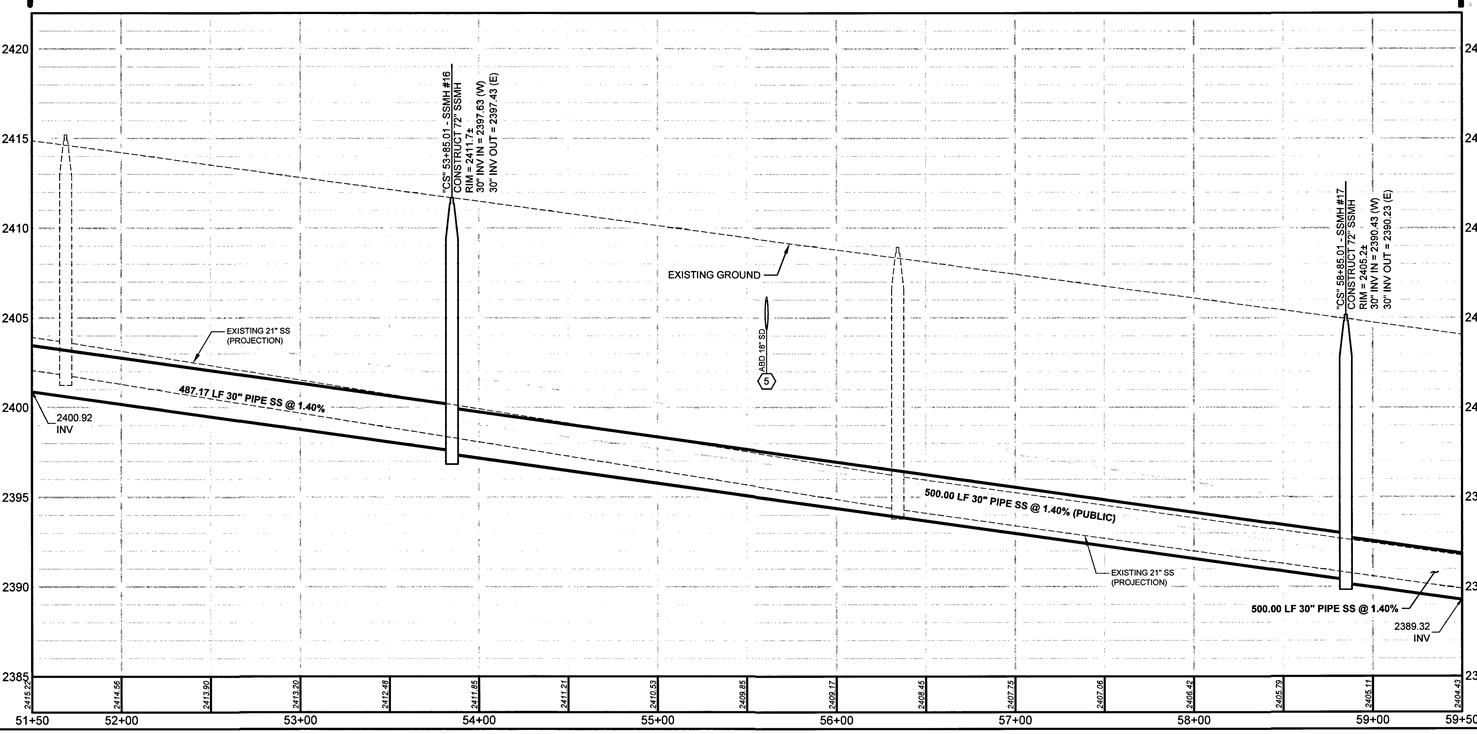

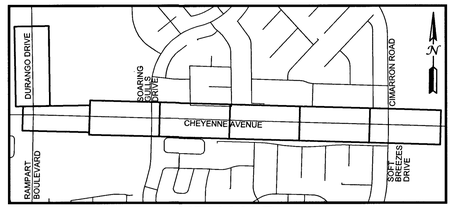

KEY MAP

40' 0 20' 40' 80'
Scale In Feet
1 inch = 40 feet

MISCELLANEOUS CONSTRUCTION NOTES:

1. ABANDON 21" SS PER SPECIFICATION SECTION 630 (800 LF THIS SHEET)
2. ABANDON SSMH PER SPECIFICATION SECTION 630 N = 644825.50, E = 238255.71 N = 644813.09, E = 238720.90
3. EXISTING 21" SS (PROTECT IN-PLACE DURING SS CONST. THEN TO BE ABANDONED ONCE RELIEF SEWER IS ACTIVE)
4. EXISTING SSMH (PROTECT IN-PLACE DURING SS CONST. THEN TO BE ABANDONED ONCE RELIEF SEWER IS ACTIVE)
5. EXISTING ABANDON 18" SD (REMOVE AS NECESSARY FOR CONSTRUCTION)
6. EXISTING POWER POLE (PROTECT IN-PLACE PER SPECIFICATION SECTION 650)
7. EXISTING STREET LIGHT (PROTECT IN-PLACE)
8. EXISTING CURB, GUTTER, AND SIDEWALK (PROTECT IN-PLACE OR REMOVE AND REPLACE AS NECESSARY FOR CONSTRUCTION AT NO ADDITIONAL COST TO THE OWNER)

SURVEY MONUMENTS*

CAP	NORTHING	EASTING	SHEET	LOCATION
A	646269.054	235982.787	D4	DURANGO
B	644890.462	236003.688	D4/SS2/SS3	DURANGO/CHEYENNE
C	644850.889	237356.533	SS4	SOARING GULLS/CHEYENNE
D	644822.546	238370.795	SS6	CHEYENNE
E	644813.051	238708.917	SS6	CHEYENNE
F	644793.793	239384.528	SS7	CHEYENNE
G	644784.194	239722.379	SS7	CHEYENNE
H	644774.532	240060.098	SS8	CIMARRON/CHEYENNE

*SEE CITY OF LAS VEGAS GENERAL NOTE #13 ON SHEET G3

NOTES:

1. CONTRACTOR SHALL VERIFY ALL HORIZONTAL AND VERTICAL LOCATIONS OF EXISTING FACILITIES BEING TIED INTO OR CROSSING PRIOR TO ANY WORK BEING DONE. CONTRACTOR SHALL COORDINATE ANY DISCREPANCIES WITH THE ENGINEER.
2. LINEAR FOOTAGE (LF), SLOPES, AND INVERTS OF SANITARY SEWER PIPES AS SHOWN ON THE PLANS ARE CALCULATED HORIZONTALLY FROM CENTERLINE OF MANHOLE TO CENTERLINE OF MANHOLE.
3. SEE PR1-PR4 & D3 SHEETS FOR PAVEMENT, CURB, GUTTER, SIDEWALK, MEDIAN AND LANDSCAPING REMOVAL/REPLACEMENT LIMITS
4. ALL WATERLINES CROSSING TRENCH WIDTHS GREATER THAN 6 FT. SHALL HAVE A PIPE SUPPORT DETAIL SUBMITTED TO THE DISTRICT FOR APPROVAL PRIOR TO EXCAVATION.

APPROVED FOR CONSTRUCTION
Las Vegas Valley Water District Engineering Services Manager
Date 04/22/14 Project No. 115833

FAST
Call before you UnderGround
1-702-432-5300
FREEWAY AND ARTERIAL SYSTEM OF TRANSPORTATION

AVOID OVERHEAD POWER LINE CONTACT. IT'S COSTLY.
Call before you Overhead
1-702-227-2929
NV ENERGY ENVIRONMENT AND SAFETY SERVICES DEPARTMENT

Call before you Dig
AVOID CUTTING UNDERGROUND UTILITY LINES. IT'S COSTLY.
Call 811

HANSEN #29930

NO.	DATE	REVISION	BY	APVD

DSGN	DR	CHK	APVD
M. WARNICK	D. PUBLOW	CH2M HILL	J. GRIEST

DEPARTMENT OF PUBLIC WORKS
ENGINEERING DESIGN SECTION
CITY ENGINEER : DAVID N. BOWERS, P.E.
PROJECT MANAGER : GINA VENGLASS, P.E.
DURANGO HILLS RELIEF SEWER PROJECT

CH2MHILL®
2485 VILLAGE VIEW DRIVE, SUITE 350, HENDERSON, NV 89074
PHONE 702-369-8175, CH2M HILL Project #240068

SANITARY SEWER DESIGN PLAN AND PROFILE "CS" 51+50 TO "CS" 59+50

PROFESSIONAL ENGINEER - STATE OF NEVADA
JEFFREY N. GRIEST EXP. 06/30/15 CIVIL No. 17156
4-22-14

Sheet SS6
10 of 35
DATE April 2014
DWG NO. 307V1045

FILE NAME: DHRS_LAYOUT_C3D_CHEYENNE SEWER.DWG

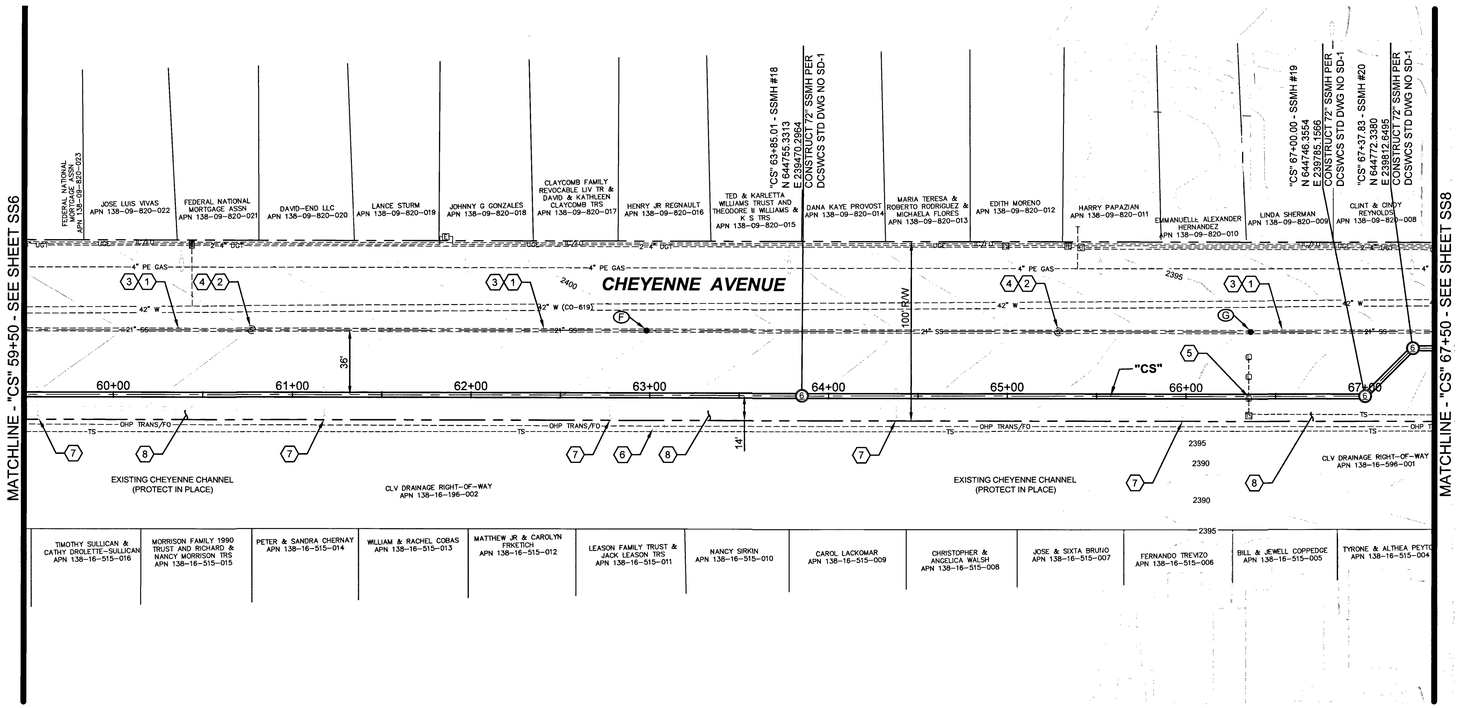

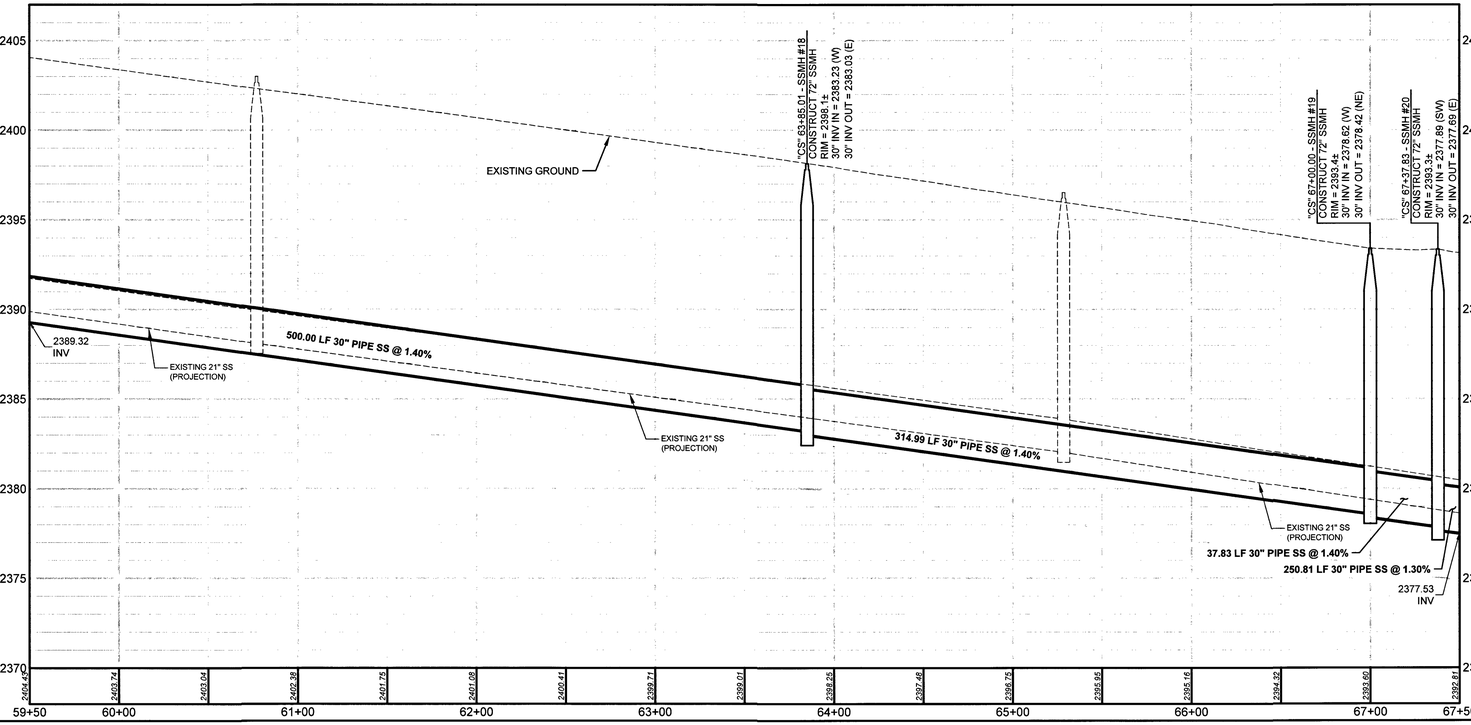

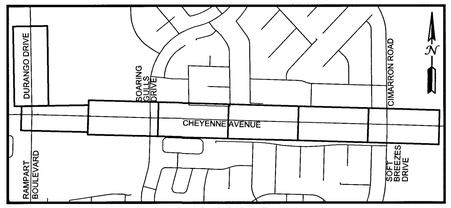

KEY MAP

40' 0 20' 40' 80'
Scale In Feet
1 inch = 40 feet

MISCELLANEOUS CONSTRUCTION NOTES:

1. ABANDON 21" SS PER SPECIFICATION SECTION 630 (800 LF THIS SHEET)
2. ABANDON SSMH PER SPECIFICATION SECTION 630
   N = 644800.16, E = 239163.56
   N = 644787.14, E = 239614.76
3. EXISTING 21" SS (PROTECT IN-PLACE DURING SS CONST. THEN TO BE ABANDONED ONCE RELIEF SEWER IS ACTIVE)
4. EXISTING SSMH (PROTECT IN-PLACE DURING SS CONST. THEN TO BE ABANDONED ONCE RELIEF SEWER IS ACTIVE)
5. EXISTING TRAFFIC LOOPS REMOVE AS NECESSARY FOR CONSTRUCTION. COST INCIDENTAL TO OTHER ITEMS OF WORK.
6. EXISTING POWER POLE (PROTECT IN-PLACE PER SPECIFICATION SECTION 650)
7. EXISTING STREET LIGHT (PROTECT IN-PLACE)
8. EXISTING CURB, GUTTER, AND SIDEWALK (PROTECT IN-PLACE OR REMOVE AND REPLACE AS NECESSARY FOR CONSTRUCTION AT NO ADDITIONAL COST TO THE OWNER)

SURVEY MONUMENTS*

CAP	NORTHING	EASTING	SHEET	LOCATION
A	646269.054	235982.787	D4	DURANGO
B	644890.462	236003.688	D4/SS2/SS3	DURANGO/CHEYENNE
C	644850.889	237356.533	SS4	SOARING GULLS/CHEYENNE
D	644822.546	238370.795	SS6	CHEYENNE
E	644813.051	238708.917	SS6	CHEYENNE
F	644793.793	239384.528	SS7	CHEYENNE
G	644784.194	239722.379	SS7	CHEYENNE
H	644774.532	240060.098	SS8	CIMARRON/CHEYENNE

*SEE CITY OF LAS VEGAS GENERAL NOTE #13 ON SHEET G3

NOTES:

1. CONTRACTOR SHALL VERIFY ALL HORIZONTAL AND VERTICAL LOCATIONS OF EXISTING FACILITIES BEING TIED INTO OR CROSSING PRIOR TO ANY WORK BEING DONE. CONTRACTOR SHALL COORDINATE ANY DISCREPANCIES WITH THE ENGINEER.
2. LINEAR FOOTAGE (LF), SLOPES, AND INVERTS OF SANITARY SEWER PIPES AS SHOWN ON THE PLANS ARE CALCULATED HORIZONTALLY FROM CENTERLINE OF MANHOLE TO CENTERLINE OF MANHOLE.
3. SEE PR1-PR4 & D3 SHEETS FOR PAVEMENT, CURB, GUTTER, SIDEWALK, MEDIAN AND LANDSCAPING REMOVAL/REPLACEMENT LIMITS
4. ALL WATERLINES CROSSING TRENCH WIDTHS GREATER THAN 6 FT. SHALL HAVE A PIPE SUPPORT DETAIL SUBMITTED TO THE DISTRICT FOR APPROVAL PRIOR TO EXCAVATION.

APPROVED FOR CONSTRUCTION
Las Vegas Valley Water District Engineering Services Manager
Date 04/29/14 Project No. 115833

FAST
Call before you UnderGround
1-702-432-5300
FREEWAY AND ARTERIAL SYSTEM OF TRANSPORTATION

AVOID OVERHEAD POWER LINE CONTACT. IT'S COSTLY.
Call before you Overhead
1-702-227-2929
NV ENERGY ENVIRONMENT AND SAFETY SERVICES DEPARTMENT

Call before you Dig
AVOID CUTTING UNDERGROUND UTILITY LINES. IT'S COSTLY.
Call 811

HANSEN #29930

NO.	DATE	REVISION	BY	APVD

DSGN M. WARNICK | DR D. PUBLOW | CHK CH2M HILL | APVD J. GRIEST

DEPARTMENT OF PUBLIC WORKS
ENGINEERING DESIGN SECTION
CITY ENGINEER: DAVID N. BOWERS, P.E.
PROJECT MANAGER: GINA VEENGLASS, P.E.

DURANGO HILLS RELIEF SEWER PROJECT

CITY OF LAS VEGAS NEVADA

CH2MHILL®
2485 VILLAGE VIEW DRIVE, SUITE 350, HENDERSON, NV 89074
PHONE 702-599-8175, CH2M HILL Project #240068

SANITARY SEWER DESIGN
PLAN AND PROFILE
"CS" 59+50 TO "CS" 67+50

PROFESSIONAL ENGINEER - STATE OF NEVADA
JEFFREY N GRIEST
EXP. 06/30/15
CIVIL
No. 17156

Sheet SS7
11 of 35
DATE April 2014
DWG NO. 307V1045

FILE NAME: DHRS_LAYOUT_C3D_CHEYENNE SEWER.DWG

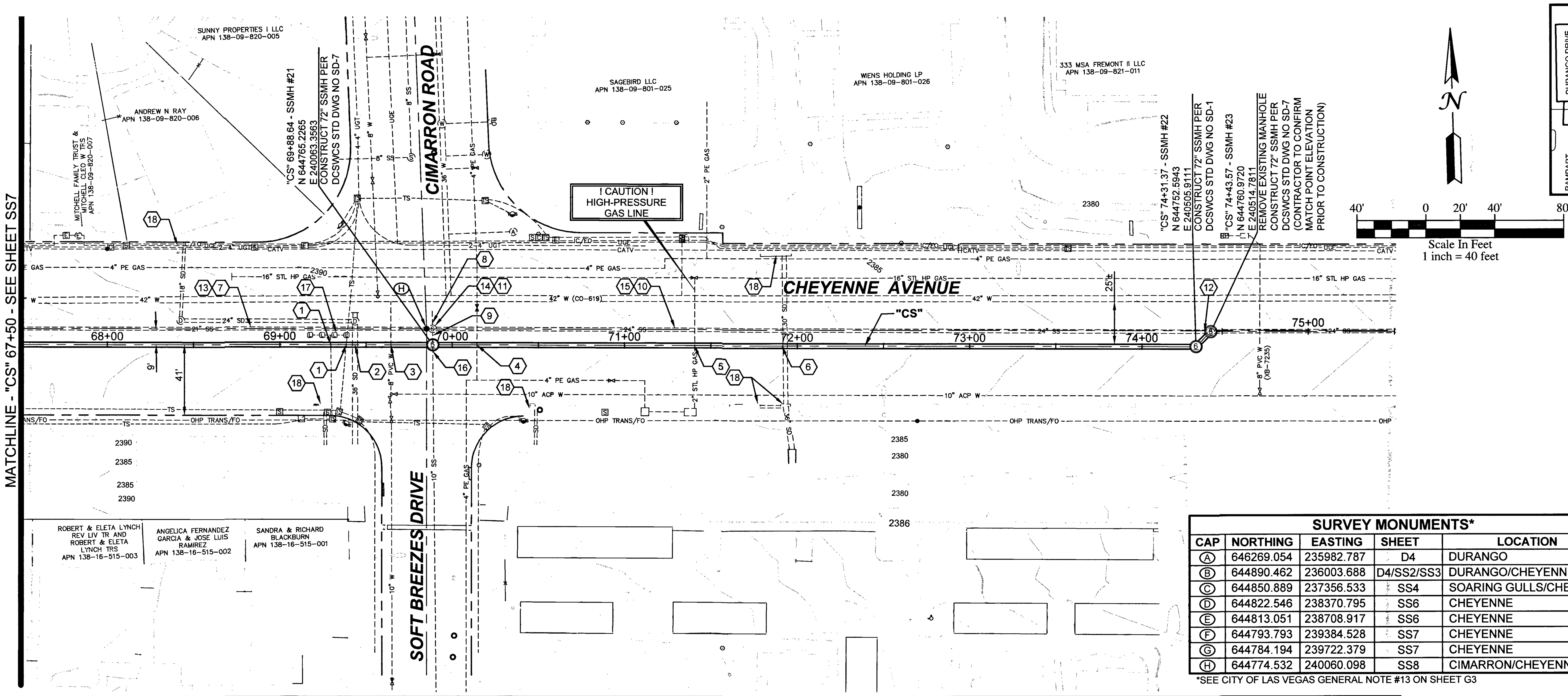

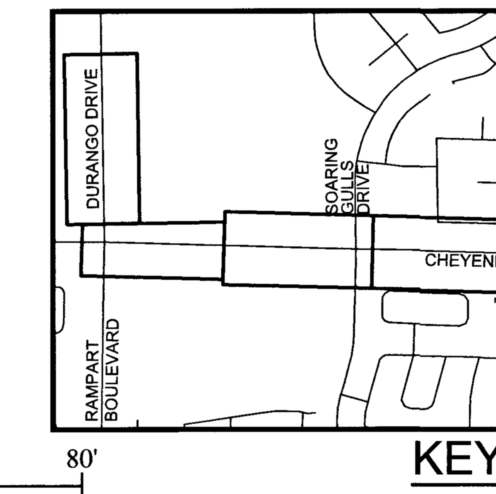

SURVEY MONUMENTS*

CAP	NORTHING	EASTING	SHEET	LOCATION
A	646269.054	235982.787	D4	DURANGO
B	644890.462	236003.688	D4/SS2/SS3	DURANGO/CHEYENNE
C	644850.889	237356.533	SS4	SOARING GULLS/CHEYENNE
D	644822.546	238370.795	SS6	CHEYENNE
E	644813.051	238708.917	SS6	CHEYENNE
F	644793.793	239384.528	SS7	CHEYENNE
G	644784.194	239722.379	SS7	CHEYENNE
H	644774.532	240060.098	SS8	CIMARRON/CHEYENNE

*SEE CITY OF LAS VEGAS GENERAL NOTE #13 ON SHEET G3

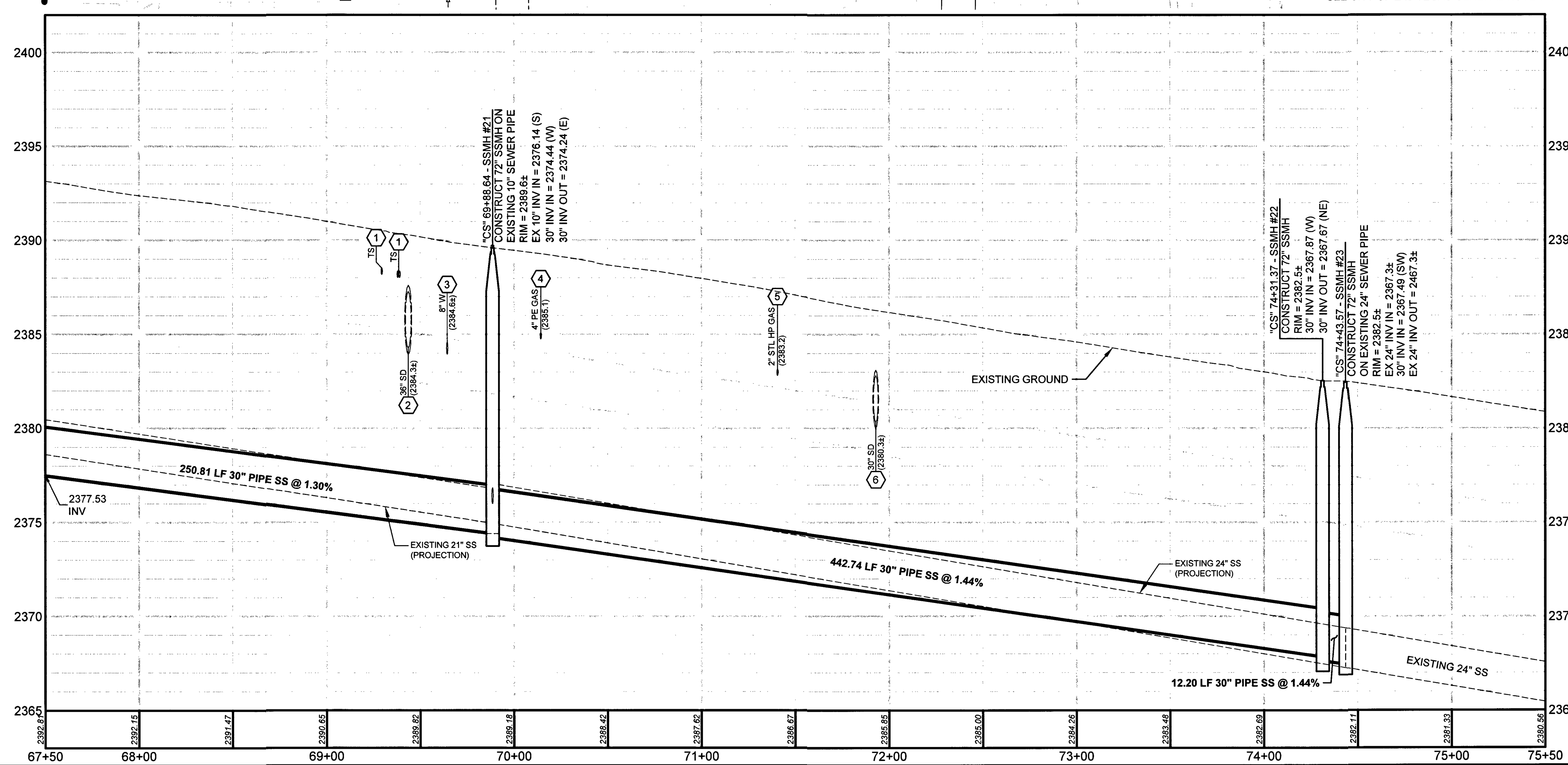

MISCELLANEOUS CONSTRUCTION NOTES:

1. EXISTING TS (PROTECT IN-PLACE OR ADJUST AS NECESSARY PER SPECIFICATION SECTION 623. COST OF ADJUSTING TRAFFIC SIGNAL CONDUIT IS INCIDENTAL TO CONSTRUCTION. SEE TS SHEETS FOR CONDUIT AND WIRE SCHEDULE.)
2. EXISTING 36" SD (PROTECT IN-PLACE)
3. EXISTING 8" W (PROTECT IN-PLACE)
4. EXISTING 4" PE GAS (PROTECT IN-PLACE)
5. EXISTING 2" STL HP GAS (PROTECT IN-PLACE)
6. EXISTING 30" SD (PROTECT IN-PLACE)
7. ABANDON 21" SS PER SPECIFICATION SECTION 630 (215 LF THIS SHEET)
8. ABANDON 8" SS PER SPECIFICATION SECTION 630 (8 FT)
9. ABANDON 10" SS PER SPECIFICATION SECTION 630 (4 FT)
10. ABANDON 24" SS PER SPECIFICATION SECTION 630 (447 FT)
11. ABANDON SSMH PER SPECIFICATION SECTION 630 N = 644744.51, E = 240063.54
12. CAP EXISTING 24" SS AT MANHOLE PER SPECIFICATION 630
13. EXISTING 21" SS (PROTECT IN-PLACE DURING SS CONST. THEN TO BE ABANDONED ONCE RELIEF SEWER IS ACTIVE)
14. EXISTING SSMH (PROTECT IN-PLACE DURING SS CONST. THEN TO BE ABANDONED ONCE RELIEF SEWER IS ACTIVE)
15. EXISTING 24" SS (PROTECT IN-PLACE DURING SS CONST. THEN TO BE ABANDONED ONCE RELIEF SEWER IS ACTIVE)
16. REMOVE 7' OF 10" SS ACROSS SSMH
17. EXISTING TRAFFIC LOOPS REMOVE AS NECESSARY FOR CONSTRUCTION. COST INCIDENTAL TO OTHER ITEMS OF WORK
18. EXISTING STORM DRAIN DROP INLET (PROTECT IN-PLACE)

NOTES:

1. CONTRACTOR SHALL VERIFY ALL HORIZONTAL AND VERTICAL LOCATIONS OF EXISTING FACILITIES BEING TIED INTO OR CROSSING PRIOR TO ANY WORK BEING DONE. CONTRACTOR SHALL COORDINATE ANY DISCREPANCIES WITH THE ENGINEER.
2. LINEAR FOOTAGE (LF), SLOPES, AND INVERTS OF SANITARY SEWER PIPES AS SHOWN ON THE PLANS ARE CALCULATED HORIZONTALLY FROM CENTERLINE OF MANHOLE TO CENTERLINE OF MANHOLE.
3. SEE PR1-PR4 & D3 SHEETS FOR PAVEMENT, CURB, GUTTER, SIDEWALK, MEDIAN AND LANDSCAPING REMOVAL/REPLACEMENT LIMITS
4. ALL WATERLINES CROSSING TRENCH WIDTHS GREATER THAN 6 FT. SHALL HAVE A PIPE SUPPORT DETAIL SUBMITTED TO THE DISTRICT FOR APPROVAL PRIOR TO EXCAVATION.

CALL SOUTHWEST GAS AT 702-651-2111 FOR STANDBY WHEN EXCAVATING OVER OR NEAR HIGH PRESSURE GAS LINE

APPROVED FOR CONSTRUCTION
Las Vegas Valley Water District Engineering Services Manager
Date 04/29/14 Project No. 115833

FAST
Call before you UnderGround
1-702-432-5300
FREEWAY AND ARTERIAL SYSTEM OF TRANSPORTATION

AVOID OVERHEAD POWER LINE CONTACT. IT'S COSTLY.
Call before you Overhead
1-702-227-2929
NV ENERGY ENVIRONMENT AND SAFETY SERVICES DEPARTMENT

Call before you Dig
AVOID CUTTING UNDERGROUND UTILITY LINES. IT'S COSTLY.
Call 811

HANSEN #29930

REVISION			
NO.	DATE		BY / APVD
DSGN M. WARNICK	DR D. PUBLOW	CHK CH2M HILL	APVD J. GRIEST

DEPARTMENT OF PUBLIC WORKS
ENGINEERING DESIGN SECTION

CITY ENGINEER : DAVID N. BOWERS, P.E.
PROJECT MANAGER : GINA VENGLASS, P.E.

DURANGO HILLS RELIEF SEWER PROJECT

CITY OF LAS VEGAS NEVADA

CH2MHILL
2485 VILLAGE VIEW DRIVE, SUITE 350, HENDERSON, NV 89074
PHONE 702-369-6175, CH2M HILL Project #240066

SANITARY SEWER DESIGN PLAN AND PROFILE "CS" 67+50 TO "CS" 75+50

PROFESSIONAL ENGINEER - STATE OF NEVADA
JEFFREY N. GRIEST
EXP. 06/30/15
CIVIL
No. 17156
4-22-14

Sheet SS8
12 of 35
DATE April 2014
DWG NO. 307V1045

FILE NAME: DHRS_LAYOUT_C3D_CHEYENNE SEWER.DWG

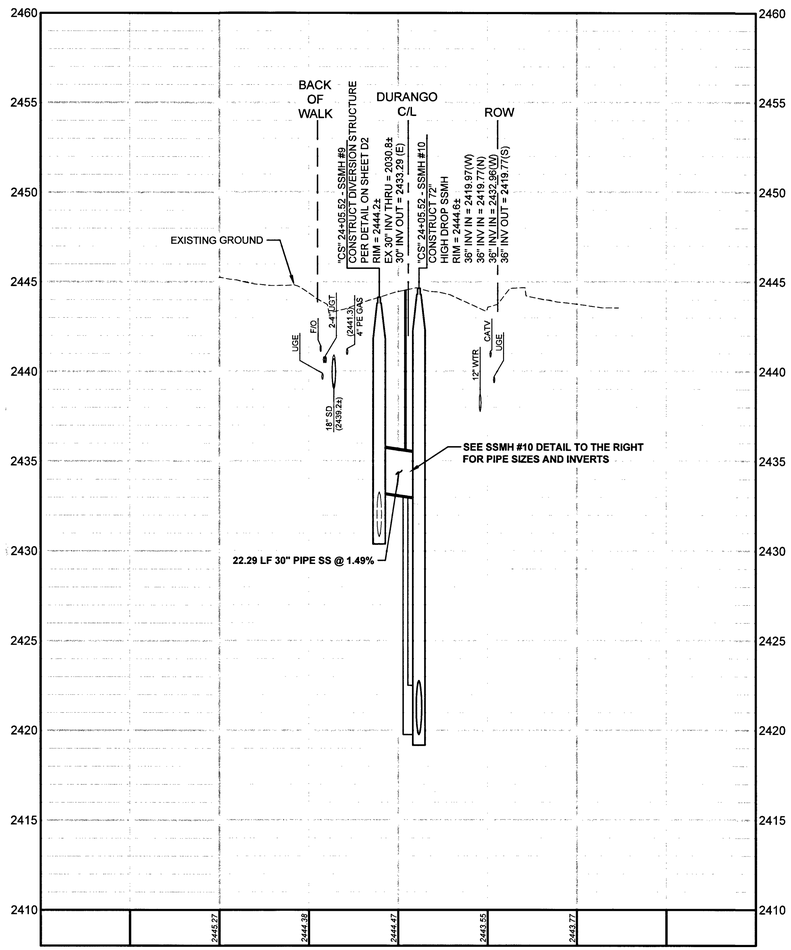

SEWER PROFILE - LAT 1

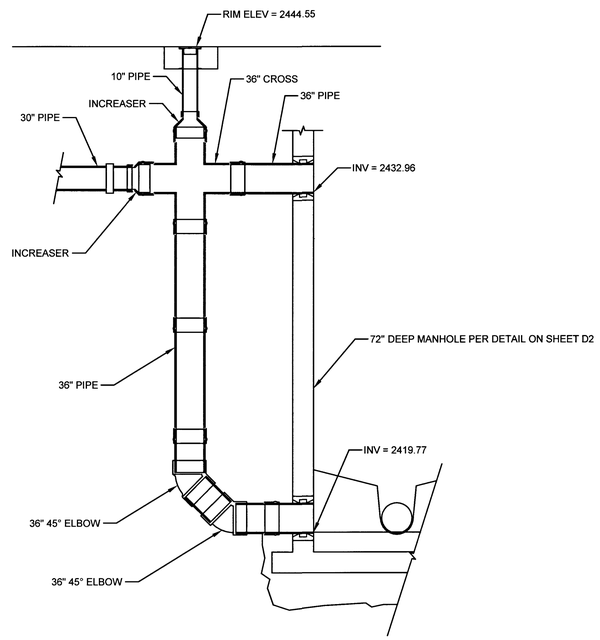

NOTE: SEE HIGH DROP MANHOLE DETAIL ON D9 FOR ADDITIONAL INFORMATION

SSMH #10 DETAIL
NOT TO SCALE

40' 0 20' 40' 80'
Scale In Feet
1 inch = 40 feet

NOTES:

1. CONTRACTOR SHALL VERIFY ALL HORIZONTAL AND VERTICAL LOCATIONS OF EXISTING FACILITIES BEING TIED INTO OR CROSSING PRIOR TO ANY WORK BEING DONE. CONTRACTOR SHALL COORDINATE ANY DISCREPANCIES WITH THE ENGINEER.
2. LINEAR FOOTAGE (LF) SLOPES AND INVERTS OF SANITARY SEWER PIPES AS SHOWN ON THE PLANS ARE CALCULATED HORIZONTALLY FROM CENTERLINE OF MANHOLE TO CENTERLINE OF MANHOLE.

FAST
Call before you UnderGround
1-702-432-5300
FREEWAY AND ARTERIAL SYSTEM OF TRANSPORTATION

AVOID OVERHEAD POWER LINE CONTACT. IT'S COSTLY.
Call before you Overhead
1-702-227-2929
NV ENERGY ENVIRONMENT AND SAFETY SERVICES DEPARTMENT

Call before you Dig
AVOID CUTTING UNDERGROUND UTILITY LINES. IT'S COSTLY.
Call 811

HANSEN #29930

NO.	DATE	REVISION	BY	APVD

DSGN	DR	CHK	APVD
M. WARNICK	D. PUBLOW	CH2M HILL	J. GRIEST

DEPARTMENT OF PUBLIC WORKS
ENGINEERING DESIGN SECTION
CITY ENGINEER : DAVID N. BOWERS, P.E.
PROJECT MANAGER : GINA VENGLASS, P.E.
DURANGO HILLS
RELIEF SEWER PROJECT

CITY OF LAS VEGAS NEVADA

CH2MHILL®
2485 VILLAGE VIEW DRIVE, SUITE 350, HENDERSON, NV 89074
PHONE 702-369-6175, CH2M HILL Project #240086

SEWER LATERAL PROFILE

PROFESSIONAL ENGINEER - STATE OF NEVADA
JEFFREY N. GRIEST
EXP. 06/30/15
CIVIL
No. 17156
4-2-14

Sheet LT1
13 of 35
DATE April 2014
DWG NO. 307V1045

FILE NAME: DHRS_LAYOUT_C3D_SEWER LATERALS.DWG

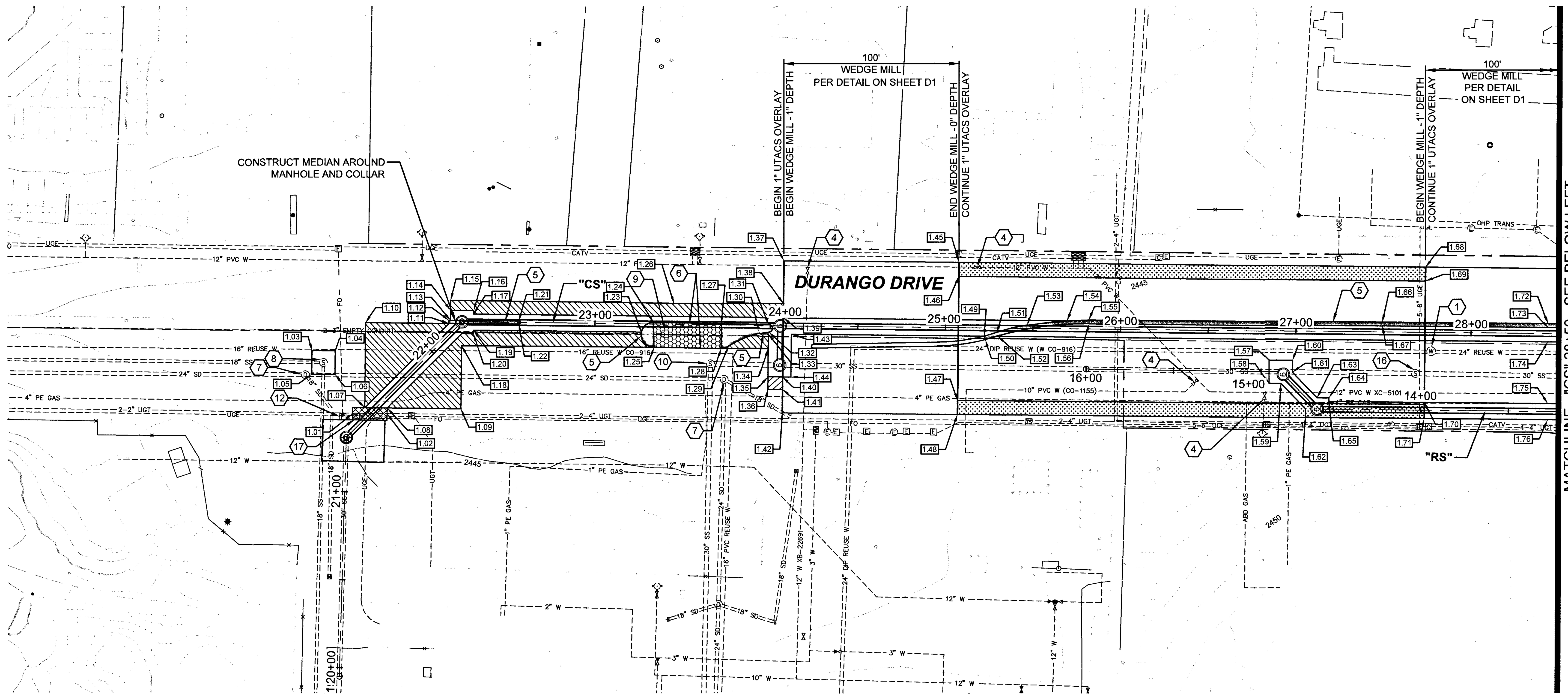

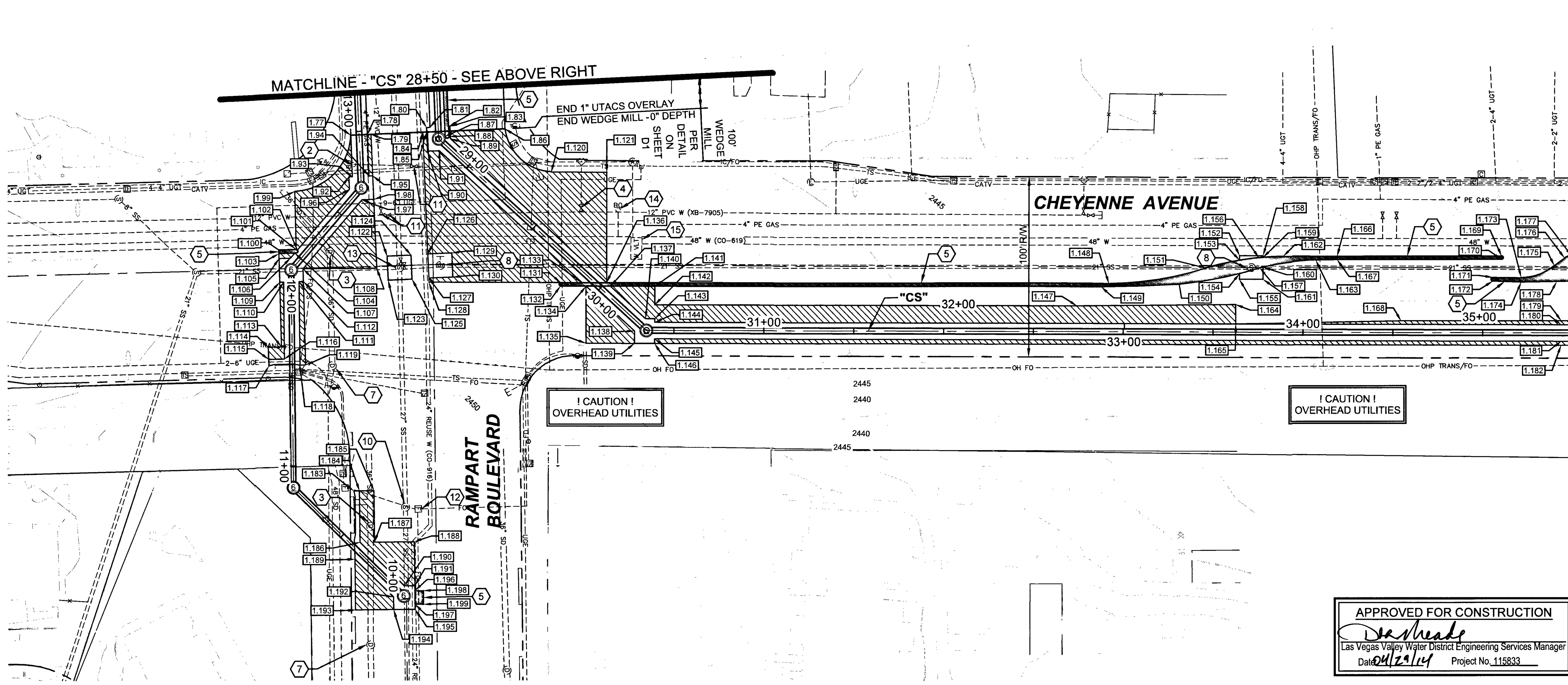

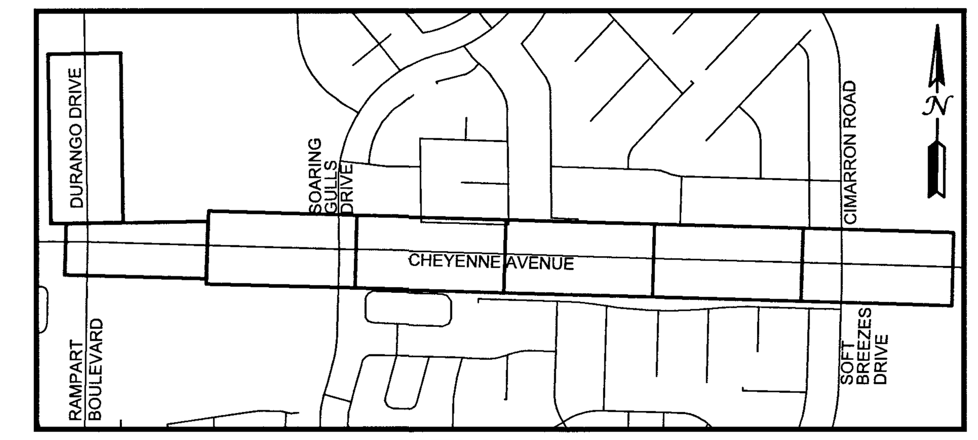

KEY MAP

40' 0 20' 40' 80'
Scale In Feet
1 inch = 40 feet

LEGEND:

- DENOTES LIMITS OF EXISTING PAVEMENT REMOVE AND REPLACE (16,727 SQ FT THIS SHEET)
- DENOTES EXISTING PAVEMENT 1" MILL AND OVERLAY UTACS (19,012 SQ FT THIS SHEET)
- DENOTES EXISTING TACK-ON MEDIAN REMOVE AND REPLACE (2,829 SQ FT THIS SHEET)
- DENOTES CURB, GUTTER AND SIDEWALK REMOVE AND REPLACE PER USDCCA STD DWG 216 & 234(20 LF THIS SHEET)
- DENOTES EDGE MILL 0" TO ½" TO MATCH EXISTING PER DETAIL ON SHEET D1 (4,261 SQ FT THIS SHEET)
- DENOTES LIMITS OF EXISTING LANDSCAPING REMOVE AND REPLACE
- DENOTES EXISTING TYPE A MEDIAN CURB WITH DECORATIVE ROCK TO BE REMOVED AND REPLACED (77 LF THIS SHEET)
- DENOTES LIMITS OF UTACS OVERLAY (29,682 SQ FT THIS SHEET)

CONSTRUCTION NOTES:

1. ADJUST EXISTING REUSE WATER MANHOLE TO FINISH GRADE
2. EXISTING BLOW OFF VALVE, PROTECT IN PLACE AND ADJUST COVER FINISH GRADE PER UDACS STD PLATE NO 37
3. ADJUST EXISTING STORM DRAIN MANHOLE TO FINISH GRADE
4. ADJUST EXISTING WATER VALVE TO FINISH GRADE PER UDACS STD PLATE NO 39 (VALVE SHALL BE ACCESSIBLE AT ALL TIMES)
5. REPLACE EXISTING TACK-ON MEDIAN PER USDCCA STD DWG NO 220
6. REMOVE AND REPLACE TYPE A MEDIAN ISLAND CURB PER USDCCA STD DWG NO 219 AND EXISTING DECORATIVE ROCK IN CENTER OF MEDIAN
7. EXISTING SDMH (PROTECT IN-PLACE)
8. EXISTING SSMH TO BE ABANDONED, SEE SHEET D4 & SS3
9. EXISTING PULL BOX TO BE REPLACED, SEE SHEET SS2
10. EXISTING SSMH (PROTECT IN-PLACE)
11. EXISTING WATER VALVE (PROTECT IN-PLACE)
12. EXISTING FO PULL BOX (PROTECT IN-PLACE)
13. EXISTING DIVERSION STRUCTURE TO BE MODIFIED, SEE SHEET SS3
14. EXISTING BLOW OFF VALVE (PROTECT IN-PLACE)
15. EXISTING WATER VAULT (PROTECT IN-PLACE)
16. ADJUST EXISTING SEWER MANHOLE TO FINISH GRADE
17. EXISTING CATV PULL BOX (TO BE RELOCATED BY OTHERS)

NOTES:

1. PER SPECIFICATION SECTION 622, CONTRACTOR IS RESPONSIBLE TO PROVIDE ADEQUATE SURVEY OF EXISTING IMPROVEMENTS INCLUDING, BUT NOT LIMITED TO PAVEMENT, MEDIANS, CURB, GUTTER & SIDEWALK PRIOR TO REMOVAL TO ENSURE IMPROVEMENTS ARE REPLACED TO EXISTING LOCATION AT EXISTING OR BETTER CONDITION.
2. PAVEMENT REPLACEMENT/MILL AND OVERLAY LIMITS SHALL BE ON LANE LINES OR PERPENDICULAR TO THE TRAVEL WAY.
3. SEE SHEET D1 FOR TYPICAL AC SECTION.
4. SEE SHEET PR1A FOR DESIGN POINT DATA.

APPROVED FOR CONSTRUCTION
Las Vegas Valley Water District Engineering Services Manager
Date 04/24/14 Project No. 115833

FAST
Call before you UnderGround
1-702-432-5300
FREEWAY AND ARTERIAL SYSTEM OF TRANSPORTATION

AVOID OVERHEAD POWER LINE CONTACT. IT'S COSTLY.
Call before you Overhead
1-702-227-2929
NV ENERGY ENVIRONMENT AND SAFETY SERVICES DEPARTMENT

Call before you Dig
AVOID CUTTING UNDERGROUND UTILITY LINES. IT'S COSTLY.
Call 811

HANSEN #29930

NO.	DATE	REVISION	BY	APVD
DSGN M. WARNICK	DR D. PUBLOW	CHK CH2M HILL	APVD J. GRIEST	

DEPARTMENT OF PUBLIC WORKS
ENGINEERING DESIGN SECTION
CITY ENGINEER : DAVID N. BOWERS, P.E.
PROJECT MANAGER : GINA VENGLASS, P.E.

DURANGO HILLS RELIEF SEWER PROJECT

CITY OF LAS VEGAS NEVADA

CH2MHILL
2485 VILLAGE VIEW DRIVE, SUITE 350, HENDERSON, NV 89074
PHONE 702-369-6175, CH2M HILL Project #

PAVEMENT REPLACEMENT
"CS" 20+50 TO "CS" 35+50

PROFESSIONAL ENGINEER STATE OF NEVADA
JEFFREY N. GRIEST
EXP. 06/30/15
CIVIL
No. 17156
4-22-14

Sheet PR1
14 of 35
DATE April 2014
DWG NO. 307V1045

FILE NAME: DHRS_LAYOUT_C3D_PAVEMENT REPLACEMENT.DWG

DESIGN POINTS

POINT NO	NORTHING	EASTING	DESCRIPTION
1.01	645675.0203	235945.0491	BEGIN CURB, GUTTER & SIDEWALK REP
1.02	645655.2500	235945.5114	END CURB, GUTTER & SIDEWALK REP
1.03	645699.1106	235980.1688	BEGIN PVMNT REP
1.04	645685.7795	235980.4146	END PVMNT REP
1.05	645698.8648	235966.8377	BEGIN PVMNT REP
1.06	645685.5337	235967.0835	END PVMNT REP
1.07	645668.1616	235948.6531	BEGIN PVMNT REP AND M&O
1.08	645655.2981	235948.8342	BEGIN PVMNT REP AND M&O
1.09	645613.2538	235949.4136	BEGIN M&O
1.10	645668.9149	235996.8755	BEGIN M&O
1.11	645621.2835	235997.6196	END M&O / PVMNT REP -AP / BEGIN MEDIAN REP
1.12	645621.3145	235999.4675	BEGIN MEDIAN REP
1.13	645620.4874	235999.4828	BEGIN PVMNT REP / MEDIAN REP - POL
1.14	645620.5741	236005.1889	BEGIN PVMNT REP AND M&O
1.15	645620.6423	236010.8929	MEGIN M&O
1.16	645607.4156	236005.3887	PVMNT REP AND M&O - AP
1.17	645607.3853	236003.3923	PVMNT REP AND M&O - AP
1.18	645613.7525	235985.1846	M&O - AP
1.19	645607.2461	235994.2267	PVMNT REP AND M&O - AP
1.20	645607.2158	235992.2302	PVMNT REP AND M&O - AP
1.21	645581.4593	236000.2057	PVMNT AND MEDIAN REP - PC
1.22	645581.4809	235998.3894	PVMNT REP AND MEDIAN REP - PC
1.23	645511.4728	235995.6807	PVMNT AND MEDIAN REP AND M&O - POC
1.24	645504.5567	236001.3038	END MEDIAN REP / PVMNT REP - PT / BEGIN TYPE A CURB REP
1.25	645503.8524	235987.2077	END MEDIAN REP AND M&O / BEGIN TYPE A CURB REP
1.26	645493.2536	236012.5163	M&O - AP
1.27	645465.9644	236001.7022	END TYPE A CURB REP / BEGIN MEDIAN REP / PVMNT REO - POL
1.28	645465.6912	235987.4570	END TYPE A CURB REP / BEGIN MEDIAN REP AND M&O
1.29	645461.4440	235988.8950	MEDIAN REP AND M&O - PC
1.30	645444.2869	235996.7007	BEGIN PVMNT REP / MEDIAN REP - POC / M&O - AP
1.31	645438.9773	236002.0226	PVMNT AND MEDIAN REP - PC
1.32	645438.7211	235997.7996	PVMNT AND MEDIAN REP - PC
1.33	645438.9745	235996.7814	END M&O / PVMNT REP - AP
1.34	645438.8477	235988.4269	END M&O / PVMNT REP - POL
1.35	645438.6046	235972.4110	BEGIN M&O / PVMNT REP - AP
1.36	645438.4802	235965.2600	BEGIN M&O
1.37	645431.2211	236038.4501	BEGIN WEDGE MILL
1.38	645430.8536	236014.2388	END M&O
1.39	645430.7311	236006.1706	END M&O
1.40	645430.2206	235972.5383	END M&O / PVMNT REP - POL
1.41	645430.1124	235965.4057	END M&O
1.42	645429.9092	235952.0219	BEGIN WEDGE MILL
1.43	645425.8160	235996.9811	PVMNT REP - AP
1.44	645425.4461	235972.6107	PVMNT REP - AP
1.45	645331.2358	236040.1824	END WEDGE MILL / BEGIN EDGE MILL
1.46	645331.1144	236032.1833	END WEDGE MILL / BEGIN EDGE MILL
1.47	645330.0441	235961.6678	END WEDGE MILL / BEGIN EDGE MILL
1.48	645329.9227	235953.6687	END WEDGE MILL / BEGIN EDGE MILL
1.49	645315.7041	235998.6525	BEGIN MEDIAN REP / PVMNT REP - PC
1.50	645315.0968	235996.5396	BEGIN MEDIAN REP

DESIGN POINTS

POINT NO	NORTHING	EASTING	DESCRIPTION
1.51	645308.5314	236000.9940	PVMNT AND MEDIAN REP - PRC
1.52	645308.0412	235998.8228	BEGIN PVMNT REP / MEDIAN REP - PRC
1.53	645291.4168	236005.4734	PVMNT AND MEDIAN REP - PCC
1.54	645268.6420	236008.5346	END PVMNT REP / MEDIAN REP - POC
1.55	645256.2640	236009.4275	MEDIAN REP - PT
1.56	645256.1461	236007.1380	PVMNT AND MEDIAN REP - PT
1.57	645152.9108	235989.1076	BEGIN PVMNT REP
1.58	645152.6677	235975.9247	BEGIN PVMNT REP
1.59	645145.8596	235976.0502	PVMNT REP - AP
1.60	645139.5793	235989.3289	PVMNT REP - AP
1.61	645139.4554	235982.6087	PVMNT REP - AP
1.62	645131.4132	235957.2516	PVMNT REP - AP
1.63	645125.0934	235968.4068	PVMNT REP - AP
1.64	645118.2853	235968.5324	PVMNT REP - AP
1.65	645118.2503	235966.6192	PVMNT REP - AP
1.66	645088.8326	236012.3905	MEDIAN REP - AP
1.67	645088.7167	236010.1784	PVMNT & MEDIAN REP - AP
1.68	645064.9563	236044.3247	END EDGE MILL / BEGIN WEDGE MILL
1.69	645064.8286	236036.3258	END EDGE MILL / BEGIN WEDGE MILL
1.70	645063.7859	235967.4463	END EDGE MILL / BEGIN WEDGE MILL
1.71	645063.6467	235958.2807	END EDGE MILL / BEGIN WEDGE MILL
1.72	644994.2693	236013.9379	MEDIAN REP - POL
1.73	644994.2203	236011.7165	PVMNT AND MEDIAN REP - POL
1.74	644994.0398	236003.5349	PVMNT REP - POL
1.75	644993.2674	235968.5173	PVMNT REP - POL
1.76	644993.0648	235959.3340	PVMNT REP - POL
1.77	644963.6582	235959.7992	END WEDGE MILL / BEGIN M&O / PVMNT REP - POL
1.78	644963.7975	235968.9648	BEGIN M&O / PVMNT REP - POL
1.79	644963.8284	235971.0071	BEGIN M&O
1.80	644966.8283	236001.9687	PVMNT REP - AP
1.81	644966.8583	236003.9475	PVMNT REP - AP
1.82	644967.0169	236014.3918	PVMNT REP - AP / MEDIAN REP - POL
1.83	644967.0280	236015.1272	PVMNT REP - AP
1.84	644964.2655	235999.7936	BEGIN M&O
1.85	644964.2992	236002.0071	BEGIN M&O / PVMNT REP - POL
1.86	644964.9616	236045.6233	END WEDGE MILL / BEGIN M&O
1.87	644961.6098	236012.2501	PVMNT AND MEDIAN REP - PC
1.88	644961.4456	236014.4851	PVMNT AND MEDIAN REP - PC
1.89	644960.3380	236015.2287	PVMNT REP AND M&O - AP
1.90	644953.6698	236002.1684	PVMNT REP AND M&O - AP
1.91	644953.7710	236008.8332	PVMNT REP AND M&O - AP
1.92	644940.5907	235958.1313	PVMNT REP AND M&O - AP
1.93	644940.6279	235960.1490	PVMNT REP AND M&O - AP
1.94	644940.7969	235969.3141	PVMNT REP - AP / END M&O
1.95	644940.8349	235971.3757	PVMNT REP - AP / END M&O
1.96	644933.6969	235958.2584	PVMNT REP AND M&O - AP
1.97	644927.5573	235965.0652	PVMNT REP - AP / BEGIN M&O
1.98	644927.6781	235971.6183	PVMNT REP - AP / BEGIN M&O
1.99	644933.1612	235927.8370	M&O - AP
1.100	644901.0920	235918.0949	BEGIN MEDIAN REP

DESIGN POINTS

POINT NO	NORTHING	EASTING	DESCRIPTION
1.101	644901.1813	235927.5718	END M&O / MEDIAN - PC
1.102	644900.7279	235928.4524	END M&O / PVMNT AND MEDIAN REP - POC
1.103	644899.0300	235918.1062	BEGIN MEDIAN REP AND M&O
1.104	644899.0253	235926.9131	END M&O / PVMNT AND MEDIAN REP - PC
1.105	644896.3072	235918.1047	PVMNT REP AND M&O - AP
1.106	644896.3299	235924.4762	PVMNT REP AND M&O - AP
1.107	644890.1942	235931.2866	END M&O / PVMNT REP - AP
1.108	644889.5137	235972.3219	END M&O
1.109	644883.1499	235918.1516	BEGIN M&O / PVMNT REP - AP
1.110	644883.1575	235920.2648	BEGIN M&O / PVMNT REP - AP
1.111	644883.1883	235928.9332	BEGIN M&O / PVMNT REP - AP
1.112	644883.1968	235931.3115	BEGIN M&O / PVMNT REP - AP
1.113	644847.4137	235918.1516	M&O - AP
1.114	644847.3661	235910.8511	M&O - AP
1.115	644840.6600	235910.8525	END M&O / PVMNT REP - AP
1.116	644840.6561	235919.5601	END M&O / PVMNT REP - AP
1.117	644836.9877	235910.8533	END PVMNT REP
1.118	644836.9827	235928.1671	END PVMNT REP AND M&O
1.119	644836.9834	235931.3215	END M&O
1.120	644940.2607	236070.7698	M&O - PT
1.121	644939.3861	236101.6880	END M&O
1.122	644896.0025	235978.2585	BEGIN PVMNT REP
1.123	644882.6714	235978.5043	BEGIN PVMNT REP
1.124	644896.2483	235991.5896	END PVMNT REP
1.125	644882.9172	235991.8354	END PVMNT REP
1.126	644896.5927	236000.8208	BEGIN PVMNT REP / M&O - AP
1.127	644883.2634	236001.1614	BEGIN PVMNT REP / M&O - AP
1.128	644880.9924	236001.1248	M&O - AP
1.129	644896.8402	236014.2467	END PVMNT REP / M&O - AP
1.130	644883.5092	236014.4924	END PVMNT REP / M&O - AP
1.131	644878.8504	236074.2637	MEDIAN - PT / M&O - AP
1.132	644876.8926	236074.2390	MEDIAN - PT
1.133	644878.5208	236086.4114	END PVMNT REP AND M&O / MEDIAN REP - POL
1.134	644876.5048	236088.4898	BEGIN PVMNT REP AND M&O - MEDIAN REP - POL
1.135	644844.8992	236087.5920	BEGIN M&O
1.136	644878.1533	236099.9560	END PVMNT REP AND M&O / MEDIAN REP - POL
1.137	644876.1362	236102.0355	BEGIN PVMNT REP AND M&O / MEDIAN REP - POL
1.138	644851.0460	236114.7363	END M&O / PVMNT REP - AP
1.139	644844.1337	236114.5399	END M&O / PVMNT REP - AP
1.140	644857.6376	236121.1064	PVMNT REP AND M&O - AP
1.141	644875.4646	236126.7171	MEDIAN - POL / M&O - AP
1.142	644865.2150	236126.4382	M&O - AP
1.143	644857.4877	236126.2280	PVMNT REP AND M&O - AP
1.144	644855.4920	236126.1695	PVMNT REP AND M&O - AP
1.145	644846.3292	236125.9013	BEGIN M&O / PVMNT REP - AP
1.146	644843.8130	236125.8299	BEGIN M&O / PVMNT REP - AP
1.147	644858.4292	236361.1565	M&O -AP
1.148	644870.3828	236379.2470	MEDIAN - PC
1.149	644868.5970	236374.9560	MEDIAN - PC
1.150	644868.9553	236418.4031	MEDIAN - PCC

DESIGN POINTS

POINT NO	NORTHING	EASTING	DESCRIPTION
1.151	644877.6645	236433.5956	MEDIAN - PRC
1.152	644884.0621	236452.3967	BEGIN PVMNT REP
1.153	644881.4885	236452.3213	BEGIN PVMNT REP / MEDIAN REP - POC
1.154	644874.0292	236452.1028	BEGIN PVMNT REP / MEDIAN REP - POC
1.155	644870.9078	236452.0114	BEGIN PVMNT REP
1.156	644882.6411	236463.1257	PVMNT AND MEDIAN REP - PCC
1.157	644876.8696	236463.5407	PVMNT AND MEDIAN REP - PRC
1.158	644883.6770	236465.5454	END PVMNT REP
1.159	644882.7949	236465.5196	END PVMNT REP / MEDIAN REP - POC
1.160	644877.2438	236465.3570	END PVMNT REP / MEDIAN REP - POC
1.161	644870.5227	236465.1601	END PVMNT REP
1.162	644883.0312	236476.6426	MEDIAN REP - PT
1.163	644880.2640	236494.6196	MEDIAN REP - PT
1.164	644856.8838	236449.4739	M&O - AP
1.165	644846.0325	236449.3427	PVMNT REP - POL / M&O - AP
1.166	644882.1362	236506.5874	MEDIAN REP - AP
1.167	644880.2331	236506.4928	MEDIAN REP - AP
1.168	644845.3910	236541.1117	M&O - AP
1.169	644879.8406	236598.0564	MEDIAN REP - PC
1.170	644877.8600	236597.9165	MEDIAN REP - PC
1.171	644867.9948	236592.8457	MEDIAN REP - PT
1.172	644865.9412	236592.7449	MEDIAN REP - PT
1.173	644867.4285	236608.7153	MEDIAN REP - PC
1.174	644865.0358	236608.6672	MEDIAN REP - AP
1.175	644873.6658	236627.2403	MEDIAN REP - PT
1.176	644877.6827	236633.0560	MEDIAN REP - PC
1.177	644878.6801	236637.0873	MEDIAN REP - PT
1.178	644864.8271	236628.3559	MEDIAN REP - PC
1.179	644842.9727	236630.2835	M&O - POL
1.180	644840.7383	236630.2119	PVMNT REP AND M&O - POL
1.181	644831.5763	236629.9183	PVMNT REP AND M&O - POL
1.182	644829.3871	236629.8481	M&O - POL
1.183	644766.3750	235956.2063	BEGIN PVMNT REP
1.184	644766.3240	235959.3725	BEGIN M&O / PVMNT REP - AP
1.185	644766.1937	235967.4494	M&O - AP
1.186	644737.8430	235958.9138	PVMNT REP AND M&O - AP
1.187	644737.7124	235966.9872	M&O - AP
1.188	644737.3814	235989.1218	END M&O
1.189	644728.5712	235955.8247	BEGIN PVMNT REP AND M&O
1.190	644712.9996	235982.9456	PVMNT REP AND M&O - AP
1.191	644712.9109	235988.7478	END PVMNT REP AND M&O
1.192	644706.9818	235976.7089	END M&O / PVMNT REP - AP
1.193	644700.3055	235955.3409	BEGIN M&O
1.194	644699.9416	235976.6013	END M&O
1.195	644699.7590	235988.5472	END PVMNT REP
1.196	644710.1446	235988.7055	BEGIN MEDIAN REP
1.197	644702.5319	235988.5896	BEGIN MEDIAN REP
1.198	644710.0592	235993.4615	END MEDIAN REP
1.199	644702.4470	235993.3219	END MEDIAN REP

NOTES:

1. PER SPECIFICATION SECTION 622, CONTRACTOR IS RESPONSIBLE TO PROVIDE ADEQUATE SURVEY OF EXISTING IMPROVEMENTS INCLUDING, BUT NOT LIMITED TO PAVEMENT, MEDIANS, CURB, GUTTER & SIDEWALK PRIOR TO REMOVAL TO ENSURE IMPROVEMENTS ARE REPLACED TO EXISTING LOCATION AT EXISTING OR BETTER CONDITION.
2. PAVEMENT REPLACEMENT/MILL AND OVERLAY LIMITS SHALL BE ON LANE LINES OR PERPENDICULAR TO THE TRAVEL WAY.
3. SEE SHEET D1 FOR TYPICAL AC SECTION.

APPROVED FOR CONSTRUCTION
Las Vegas Valley Water District Engineering Services Manager
Date 04/29/14 Project No. 115833

FAST
Call before you UnderGround
1-702-432-5300
FREEWAY AND ARTERIAL SYSTEM OF TRANSPORTATION

AVOID OVERHEAD POWER LINE CONTACT. IT'S COSTLY.
Call before you Overhead
1-702-227-2929
NV ENERGY ENVIRONMENT AND SAFETY SERVICES DEPARTMENT

Call before you Dig
AVOID CUTTING UNDERGROUND UTILITY LINES. IT'S COSTLY.
Call 811

HANSEN #29930

NO.	DATE	REVISION	BY	APVD

DSGN	M. WARNICK	DR	D. PUBLOW
CHK	CH2M HILL	APVD	J. GRIEST

DEPARTMENT OF PUBLIC WORKS
ENGINEERING DESIGN SECTION
CITY ENGINEER : DAVID N. BOWERS, P.E.
PROJECT MANAGER : GINA VENGLASS, P.E.
DURANGO HILLS
RELIEF SEWER PROJECT

CITY OF LAS VEGAS NEVADA

CH2MHILL®
2485 VILLAGE VIEW DRIVE, SUITE 350, HENDERSON, NV 89074
PHONE 702-369-6175, CH2M HILL Project #240066

PAVEMENT REPLACEMENT
"CS" 20+50 TO "CS" 35+50

PROFESSIONAL ENGINEER - STATE OF NEVADA
JEFFREY N. GRIEST
EXP. 06/30/15
CIVIL
No. 17156
4-22-14

Sheet PR1A
15 of 35
DATE April 2014
DWG NO. 307V1045

FILE NAME: D:\RS_LAYOUT_C3D_PAVEMENT REPLACEMENT.DWG

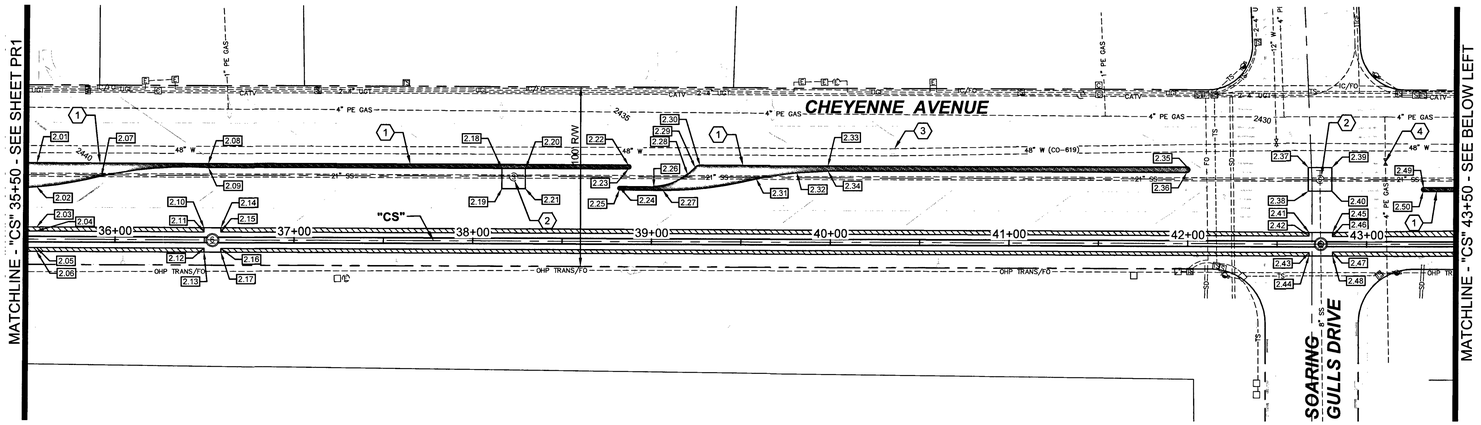

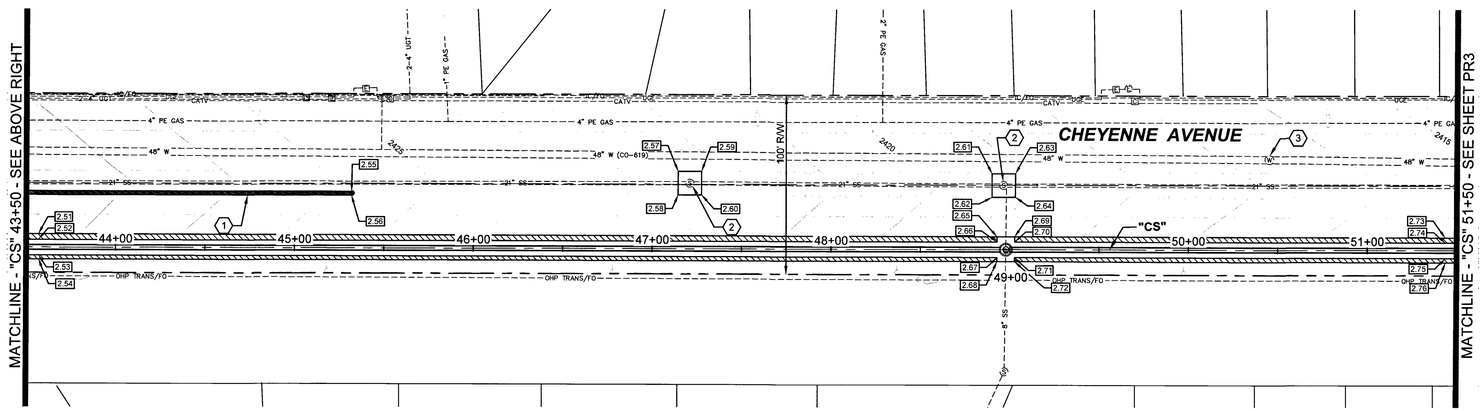

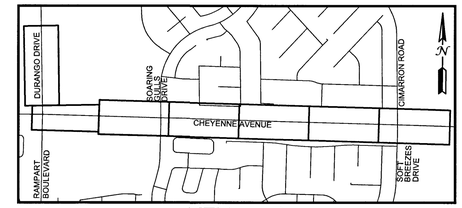

KEY MAP

40' 0 20' 40' 80'
Scale In Feet
1 inch = 40 feet

LEGEND:

- DENOTES LIMITS OF EXISTING PAVEMENT REMOVE AND REPLACE (15,047 SQ FT)
- DENOTES EXISTING PAVEMENT 1" MILL AND OVERLAY UTACS (7,538 SQ FT)
- DENOTES EXISTING TACK-ON MEDIAN REMOVE AND REPLACE (2,993 SQ FT)

CONSTRUCTION NOTES:

1. REPLACE EXISTING TACK-ON MEDIAN PER USDCCA STD DWG NO 220
2. EXISTING SSMH TO BE ABANDONED, SEE SHEET SS4 & SS5
3. EXISTING WATER MANHOLE (PROTECT IN-PLACE)
4. EXISTING GAS VALVE (PROTECT IN-PLACE)

NOTES:

1. PER SPECIFICATION SECTION 622, CONTRACTOR IS RESPONSIBLE TO PROVIDE ADEQUATE SURVEY OF EXISTING IMPROVEMENTS INCLUDING, BUT NOT LIMITED TO PAVEMENT, MEDIANS, CURB, GUTTER & SIDEWALK PRIOR TO REMOVAL TO ENSURE IMPROVEMENTS ARE REPLACED TO EXISTING LOCATION AT EXISTING OR BETTER CONDITION.
2. PAVEMENT REPLACEMENT/MILL AND OVERLAY LIMITS SHALL BE ON LANE LINES OR PERPENDICULAR TO THE TRAVEL WAY.
3. SEE SHEET D1 FOR TYPICAL AC SECTION.

APPROVED FOR CONSTRUCTION
Las Vegas Valley Water District Engineering Services Manager
Date 04/29/14 Project No. 115833

FAST
Call before you UnderGround
1-702-432-5300
FREEWAY AND ARTERIAL SYSTEM OF TRANSPORTATION

AVOID OVERHEAD POWER LINE CONTACT. IT'S COSTLY.
Call before you Overhead
1-702-227-2929
NV ENERGY ENVIRONMENT AND SAFETY SERVICES DEPARTMENT

Call before you Dig
AVOID CUTTING UNDERGROUND UTILITY LINES. IT'S COSTLY.
Call 811

HANSEN #29930

DESIGN POINTS			
POINT NO	NORTHING	EASTING	DESCRIPTION
2.01	644878.4990	236643.9162	MEDIAN REP- POL
2.02	644864.9832	236643.4830	MEDIAN REP - PCC
2.03	644842.6141	236642.7661	M&O - POL
2.04	644840.3730	236642.6943	PVMNT REP AND M&O - POL
2.05	644831.2110	236642.4006	PVMNT REP AND M&O - POL
2.06	644829.0178	236642.3303	M&O - POL
2.07	644870.2083	236679.7607	MEDIAN REP - PRC
2.08	644875.6654	236739.7465	MEDIAN REP - AP
2.09	644873.4620	236739.6769	MEDIAN REP - PT
2.10	644839.9410	236736.3657	END M&O / PVMNT REP - AP
2.11	644837.6331	236736.3000	END M&O / PVMNT REP - AP
2.12	644828.4703	236736.0318	END M&O / PVMNT REP - AP
2.13	644826.3232	236735.9704	END M&O / PVMNT REP - AP
2.14	644839.6724	236745.8042	BEGIN M&O / PVMNT REP - AP
2.15	644837.3568	236745.7383	BEGIN M&O / PVMNT REP - AP
2.16	644828.1941	236745.4701	BEGIN M&O / PVMNT REP - AP
2.17	644826.0533	236745.4089	BEGIN M&O / PVMNT REP - AP
2.18	644868.6417	236903.6203	BEGIN PVMNT REP / MEDIAN REP - POL
2.19	644857.3349	236903.4916	BEGIN PVMNT REP
2.20	644868.2512	236916.9546	END PVMNT REP / MEDIAN REP - POL
2.21	644856.9531	236916.5300	END PVMNT REP
2.22	644868.8103	236974.4134	MEDIAN REP - PC
2.23	644866.5663	236974.4382	MEDIAN REP - PC

DESIGN POINTS			
POINT NO	NORTHING	EASTING	DESCRIPTION
2.24	644856.8755	236969.0987	MEDIAN REP - PT
2.25	644854.9689	236969.0894	MEDIAN REP - PT
2.26	644856.2760	236988.4107	MEDIAN REP - PC
2.27	644854.0236	236993.4453	MEDIAN REP - PC
2.28	644862.7970	237007.4128	MEDIAN REP - PRC
2.29	644866.4913	237011.7155	MEDIAN REP - PRC
2.30	644867.7009	237014.4349	MEDIAN REP - PT
2.31	644859.1959	237045.8821	MEDIAN REP - PRC
2.32	644862.1118	237068.5163	MEDIAN REP - AP
2.33	644865.5464	237086.0116	MEDIAN REP - AP
2.34	644862.5824	237085.9247	MEDIAN REP - AP
2.35	644859.8111	237286.9674	MEDIAN REP - PC
2.36	644856.6610	237286.6937	MEDIAN REP - PC
2.37	644857.7391	237354.5634	BEGIN PVMNT REP
2.38	644844.4807	237354.3682	BEGIN PVMNT REP
2.39	644857.3490	237367.8844	END PVMNT REP
2.40	644844.1132	237367.5050	END PVMNT REP
2.41	644821.5559	237354.0694	END M&O / PVMNT REP - AP
2.42	644819.5523	237354.0107	END M&O / PVMNT REP - AP
2.43	644810.3896	237353.7425	END M&O / PVMNT REP - AP
2.44	644808.3859	237353.6864	END M&O / PVMNT REP - AP
2.45	644821.1711	237367.2154	BEGIN M&O / PVMNT REP - AP
2.46	644818.9273	237367.1526	BEGIN M&O / PVMNT REP - AP

DESIGN POINTS			
POINT NO	NORTHING	EASTING	DESCRIPTION
2.47	644810.2626	237366.9099	BEGIN M&O / PVMNT REP - AP
2.48	644808.0175	237366.8422	BEGIN M&O / PVMNT REP - AP
2.49	644844.7457	237418.8246	MEDIAN REP - PT
2.50	644842.5476	237418.5459	MEDIAN REP - PT
2.51	644819.9889	237443.2157	M&O - POL
2.52	644816.8029	237443.0233	PVMNT REP AND M&O - POL
2.53	644808.1362	237442.8520	PVMNT REP AND M&O - POL
2.54	644805.9070	237442.7835	M&O - POL
2.55	644839.2098	237618.8258	MEDIAN REP - PC
2.56	644836.9912	237618.6581	MEDIAN REP - PC
2.57	644845.7191	237801.6917	BEGIN PVMNT REP
2.58	644832.5642	237801.3236	BEGIN PVMNT REP
2.59	644845.3512	237814.8414	END PVMNT REP
2.60	644832.1963	237814.4733	END PVMNT REP
2.61	644840.0332	237977.1268	BEGIN PVMNT REP
2.62	644826.8783	237976.7588	BEGIN PVMNT REP
2.63	644839.6652	237990.2808	END PVMNT REP
2.64	644826.5103	237989.9128	END PVMNT REP
2.65	644804.6575	237978.9704	END M&O / PVMNT REP - AP
2.66	644801.7971	237978.8903	END M&O / PVMNT REP - AP
2.67	644793.1338	237978.6477	END M&O / PVMNT REP - AP
2.68	644790.8806	237978.5847	END M&O / PVMNT REP - AP
2.69	644804.3830	237988.8697	BEGIN M&O / PVMNT REP - AP

DESIGN POINTS			
POINT NO	NORTHING	EASTING	DESCRIPTION
2.70	644801.5200	237988.7896	BEGIN M&O / PVMNT REP - AP
2.71	644792.8567	237988.5472	BEGIN M&O / PVMNT REP - AP
2.72	644790.5877	237988.4837	BEGIN M&O / PVMNT REP - AP
2.73	644797.6544	238229.6307	M&O - POL
2.74	644794.7842	238229.5392	PVMNT REP AND M&O - POL
2.75	644786.1218	238229.2628	PVMNT REP AND M&O - POL
2.76	644783.7239	238229.1863	M&O - POL

NO.	DATE	REVISION	BY	APVD

DSGN M. WARNICK | DR D. PUBLOW | CHK CH2M HILL | APVD J. GRIEST

DEPARTMENT OF PUBLIC WORKS
ENGINEERING DESIGN SECTION
CITY ENGINEER : DAVID N. BOWERS, P.E.
PROJECT MANAGER : GINA VENGLASS, P.E.

DURANGO HILLS RELIEF SEWER PROJECT

CITY OF LAS VEGAS NEVADA

CH2MHILL®
2485 VILLAGE VIEW DRIVE, SUITE 300, HENDERSON, NV 89074
PHONE (702-399-5175, CH2M HILL Project #240068

PAVEMENT REPLACEMENT
"CS" 35+50 TO 51+50

PROFESSIONAL ENGINEER - STATE OF NEVADA
JEFFREY N. GRIEST
EXP. 06/30/15
CIVIL
No. 17156
4-22-14

Sheet PR2
16 of 35
DATE April 2014
DWG NO. 307V1045

FILE NAME: DHRS_LAYOUT_C3D_PAVEMENT REPLACEMENT.DWG

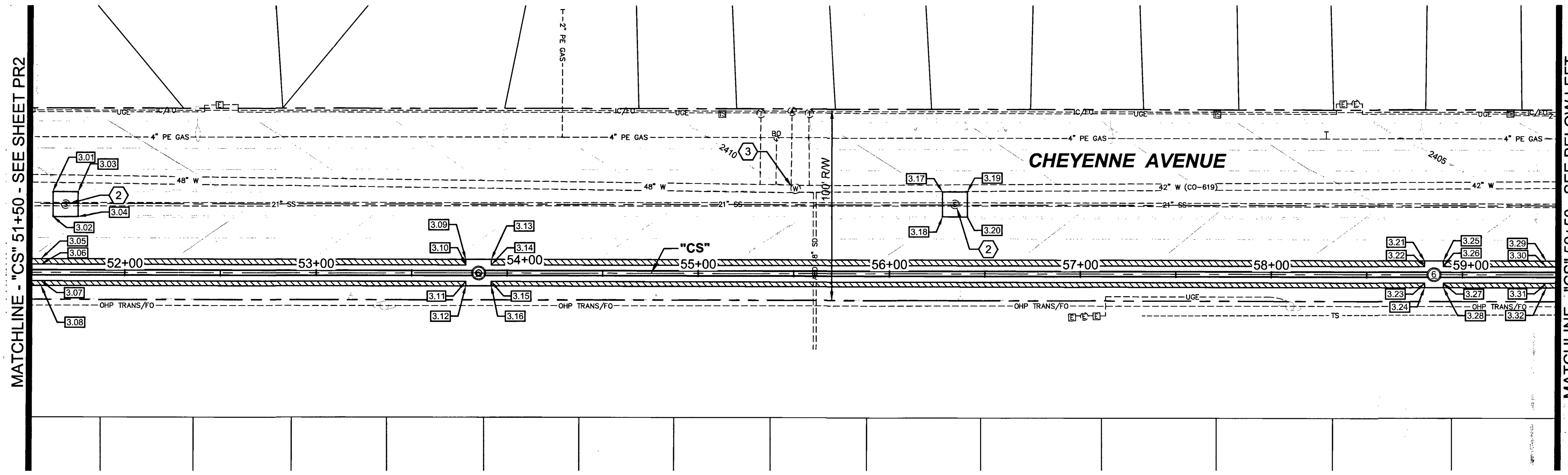

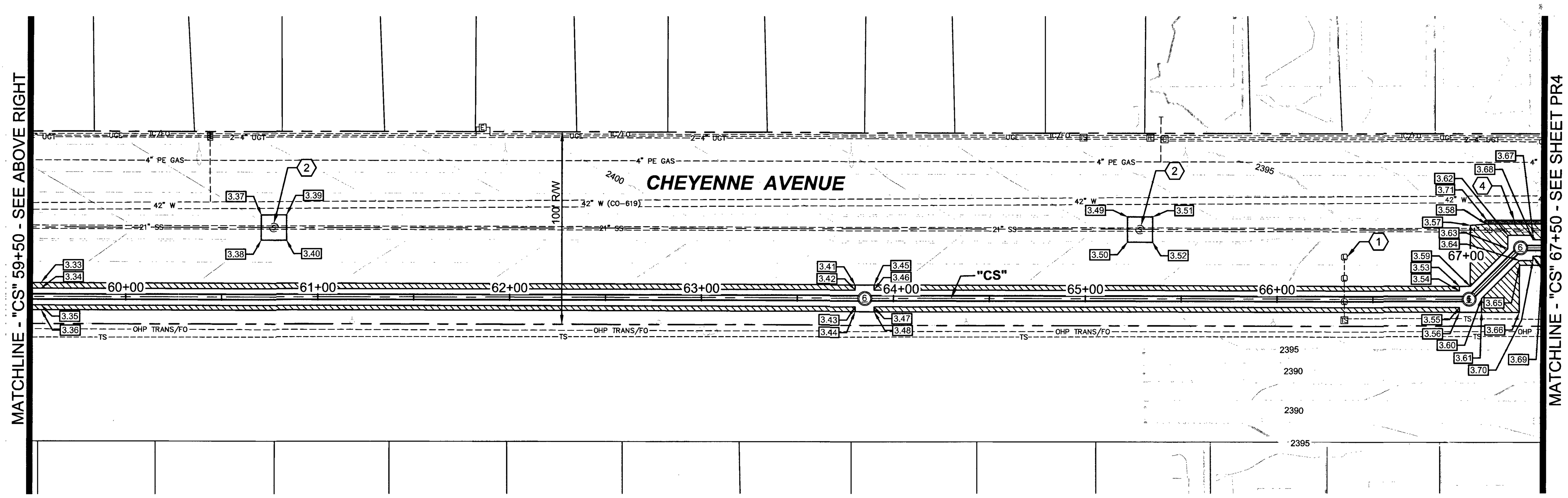

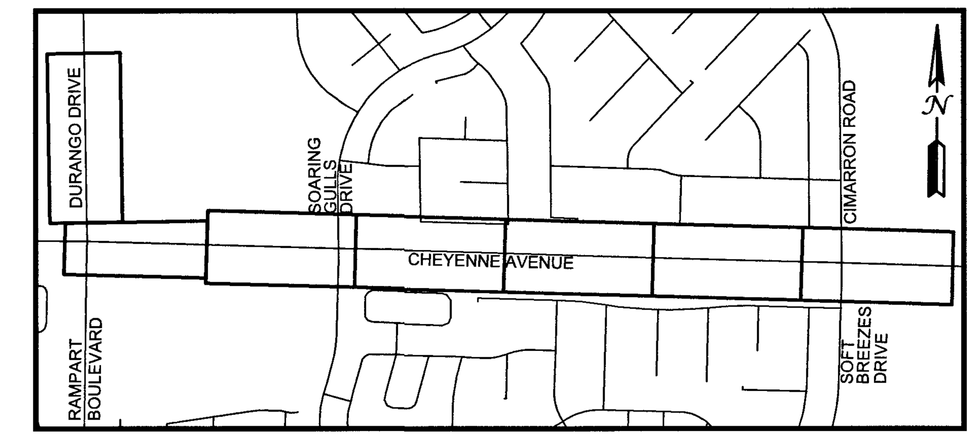

KEY MAP

Scale In Feet
1 inch = 40 feet

LEGEND:

- DENOTES LIMITS OF EXISTING PAVEMENT REMOVE AND REPLACE (14,839 SQ FT)
- DENOTES EXISTING PAVEMENT 1" MILL AND OVERLAY UTACS (8,832 SQ FT)
- DENOTES EXISTING TACK-ON MEDIAN REMOVE AND REPLACE (62 SQ FT)

CONSTRUCTION NOTES:

1. EXISTING TRAFFIC LOOPS NOT IN SERVICE, REMOVE AS NECESSARY FOR CONSTRUCTION
2. EXISTING SSMH TO BE ABANDONED, SEE SHEET SS6 & SS7
3. EXISTING WATER MANHOLE (PROTECT IN-PLACE)
4. REPLACE EXISTING TACK-ON MEDIAN PER USDCCA STD DWG NO 220

DESIGN POINTS

POINT NO	NORTHING	EASTING	DESCRIPTION
3.01	644832.3523	238249.2360	BEGIN PVMNT REP
3.02	644819.1049	238248.9569	BEGIN PVMNT REP
3.03	644831.8920	238262.4716	END PVMNT REP
3.04	644818.7371	238262.1035	END PVMNT REP
3.05	644797.3053	238242.1023	M&O - POL
3.06	644794.4352	238242.0107	PVMNT REP AND M&O - POL
3.07	644785.7729	238241.7343	PVMNT REP AND M&O - POL
3.08	644783.3649	238241.6575	M&O - POL
3.09	644791.0780	238464.2326	END M&O / PVMNT REP - AP
3.10	644788.2200	238464.1526	END M&O / PVMNT REP - AP
3.11	644779.5567	238463.9102	END M&O / PVMNT REP - AP
3.12	644777.1836	238463.8429	END M&O / PVMNT REP - AP
3.13	644790.6993	238477.5702	BEGIN M&O / PVMNT REP - AP
3.14	644787.8450	238477.4891	BEGIN M&O / PVMNT REP - AP
3.15	644779.1819	238477.2432	BEGIN M&O / PVMNT REP - AP
3.16	644776.8051	238477.1757	BEGIN M&O / PVMNT REP - AP
3.17	644819.8537	238714.5302	BEGIN PVMNT REP
3.18	644806.6990	238714.1552	BEGIN PVMNT REP
3.19	644819.4793	238727.6629	END PVMNT REP
3.20	644806.3219	238727.2878	END PVMNT REP

DESIGN POINTS

POINT NO	NORTHING	EASTING	DESCRIPTION
3.21	644777.0168	238965.7560	END M&O / PVMNT REP - AP
3.22	644774.0507	238965.6722	END M&O / PVMNT REP - AP
3.23	644765.3875	238965.4274	END M&O / PVMNT REP - AP
3.24	644762.9323	238965.3581	END M&O / PVMNT REP - AP
3.25	644776.7371	238975.6572	BEGIN M&O / PVMNT REP - AP
3.26	644773.7697	238975.5726	BEGIN M&O / PVMNT REP - AP
3.27	644765.1066	238975.3256	BEGIN M&O / PVMNT REP - AP
3.28	644762.6540	238975.2557	BEGIN M&O / PVMNT REP - AP
3.29	644775.1820	239029.4605	M&O - POL
3.30	644772.2361	239029.3701	PVMNT REP AND M&O - POL
3.31	644763.5735	239029.1042	PVMNT REP AND M&O - POL
3.32	644761.1419	239029.0296	M&O - POL
3.33	644774.8300	239041.5787	M&O - POL
3.34	644771.8906	239041.4885	PVMNT REP AND M&O - POL
3.35	644763.2280	239041.2226	PVMNT REP AND M&O - POL
3.36	644760.8011	239041.1481	M&O - POL
3.37	644806.9287	239157.1752	BEGIN PVMNT REP
3.38	644793.7741	239156.8002	BEGIN PVMNT REP
3.39	644806.5537	239170.3290	END PVMNT REP
3.40	644793.3991	239169.9540	END PVMNT REP

DESIGN POINTS

POINT NO	NORTHING	EASTING	DESCRIPTION
3.41	644762.4518	239465.5458	END M&O / PVMNT REP - AP
3.42	644759.8040	239465.4703	END M&O / PVMNT REP - AP
3.43	644751.1408	239465.2233	END M&O / PVMNT REP - AP
3.44	644748.6214	239465.1515	END M&O / PVMNT REP - AP
3.45	644762.1616	239475.4448	BEGIN M&O / PVMNT REP - AP
3.46	644759.5218	239475.3695	BEGIN M&O / PVMNT REP - AP
3.47	644750.8586	239475.1226	BEGIN M&O / PVMNT REP - AP
3.48	644748.3166	239475.0501	BEGIN M&O / PVMNT REP - AP
3.49	644793.9037	239608.3739	BEGIN PVMNT REP
3.50	644780.7490	239607.9989	BEGIN PVMNT REP
3.51	644793.5287	239621.5274	END PVMNT REP
3.52	644780.3741	239621.1524	END PVMNT REP
3.53	644753.2217	239780.4007	END M&O / PVMNT REP AP
3.54	644750.8281	239780.3305	END M&O / PVMNT REP AP
3.55	644742.1650	239780.0835	END M&O / PVMNT REP AP
3.56	644739.7135	239780.0115	END M&O / PVMNT REP AP
3.57	644784.8000	239786.8506	BEGIN M&O
3.58	644785.2824	239795.2429	M&O - AP
3.59	644753.0593	239785.9413	BEGIN M&O / PVMNT REP - AP
3.60	644746.6071	239791.7318	BEGIN M&O / PVMNT REP - AP

DESIGN POINTS

POINT NO	NORTHING	EASTING	DESCRIPTION
3.61	644739.3754	239791.5194	BEGIN M&O / PVMNT REP - AP
3.62	644779.1027	239806.2623	PVMNT REP AND M&O - AP
3.63	644772.0747	239806.0620	PVMNT REP AND M&O - AP
3.64	644765.7735	239812.0123	PVMNT REP AND M&O - AP
3.65	644763.3153	239811.9422	M&O - AP
3.66	644738.7966	239811.2219	M&O - AP
3.67	644778.7278	239819.4143	PVMNT REP AND M&O - AP
3.68	644776.4830	239819.3503	PVMNT REP AND M&O - AP
3.69	644767.8198	239819.1033	PVMNT REP AND M&O - AP
3.70	644765.5731	239819.0393	PVMNT REP AND M&O - AP
3.71	644787.2548	239795.4298	MEDIAN REP - PT

NOTES:

1. PER SPECIFICATION SECTION 622, CONTRACTOR IS RESPONSIBLE TO PROVIDE ADEQUATE SURVEY OF EXISTING IMPROVEMENTS INCLUDING, BUT NOT LIMITED TO PAVEMENT, MEDIANS, CURB, GUTTER & SIDEWALK PRIOR TO REMOVAL TO ENSURE IMPROVEMENTS ARE REPLACED TO EXISTING LOCATION AT EXISTING OR BETTER CONDITION.
2. PAVEMENT REPLACEMENT/MILL AND OVERLAY LIMITS SHALL BE ON LANE LINES OR PERPENDICULAR TO THE TRAVEL WAY.
3. SEE SHEET D1 FOR TYPICAL AC SECTION.

APPROVED FOR CONSTRUCTION
Las Vegas Valley Water District Engineering Services Manager
Date 04/29/14 Project No. 115833

FAST Call before you UnderGround 1-702-432-5300
FREEWAY AND ARTERIAL SYSTEM OF TRANSPORTATION

AVOID OVERHEAD POWER LINE CONTACT. IT'S COSTLY.
Call before you Overhead 1-702-227-2929
NV ENERGY ENVIRONMENT AND SAFETY SERVICES DEPARTMENT

Call before you Dig
AVOID CUTTING UNDERGROUND UTILITY LINES. IT'S COSTLY.
Call 811

HANSEN #29930

NO.	DATE	REVISION	BY	APVD

DSGN M. WARNICK | DR D. PUBLOW | CHK CH2M HILL | APVD J. GRIEST

DEPARTMENT OF PUBLIC WORKS
ENGINEERING DESIGN SECTION
CITY ENGINEER: DAVID N. BOWERS, P.E.
PROJECT MANAGER: GINA VENGLASS, P.E.

CITY OF LAS VEGAS NEVADA

DURANGO HILLS RELIEF SEWER PROJECT

CH2MHILL®
2485 VILLAGE VIEW DRIVE, SUITE 350, HENDERSON, NV 89074
PHONE 702-369-6175, CH2M HILL Project #240066

PAVEMENT REPLACEMENT
"CS" 51+50 TO 67+50

PROFESSIONAL ENGINEER - STATE OF NEVADA
JEFFREY N. GRIEST
EXP. 06/30/15
CIVIL
No. 17156
4-22-14

Sheet PR3
17 of 35

DATE April 2014
DWG NO. 307V1045

FILE NAME: DHRS_LAYOUT_C3D_PAVEMENT REPLACEMENT.DWG

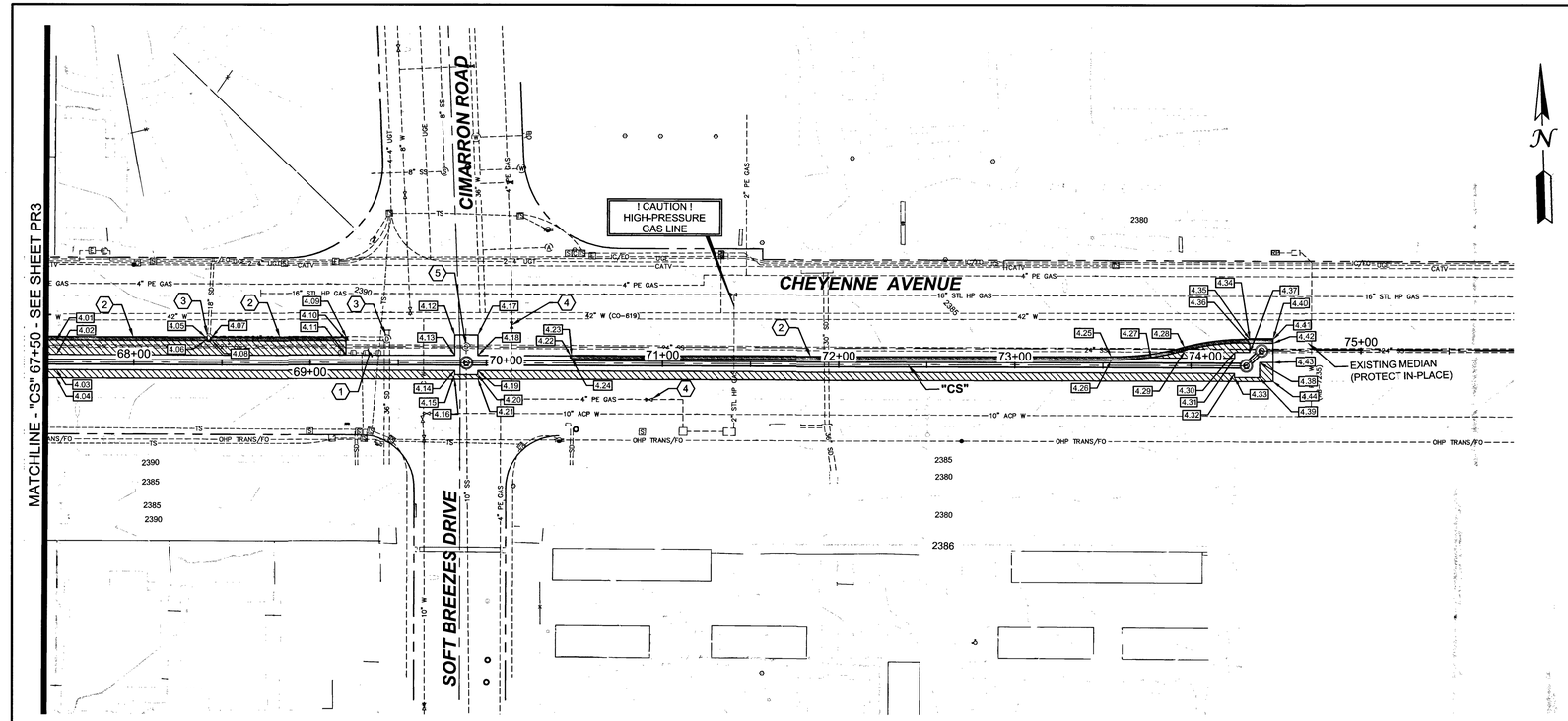

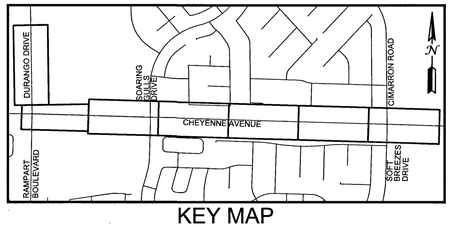

KEY MAP

40' 0 20' 40' 80'
Scale In Feet
1 inch = 40 feet

LEGEND:

- DENOTES LIMITS OF EXISTING PAVEMENT REMOVE AND REPLACE (5,800 SQ FT)
- DENOTES EXISTING PAVEMENT 1" MILL AND OVERLAY UTACS (4,889 SQ FT)
- DENOTES EXISTING TACK-ON MEDIAN REMOVE AND REPLACE (1,152 SQ FT)

CONSTRUCTION NOTES:

1. EXISTING TRAFFIC LOOPS NOT IN SERVICE, REMOVE AS NECESSARY FOR CONSTRUCTION
2. REPLACE EXISTING TACK-ON MEDIAN PER USDCCA STD DWG NO 220
3. EXISTING SDMH (PROTECT IN-PLACE)
4. EXISTING GAS VALVE (PROTECT IN-PLACE)
5. EXISTING SSMH TO BE ABANDONED, SEE SHEET SS7

NOTES:

1. PER SPECIFICATION SECTION 622, CONTRACTOR IS RESPONSIBLE TO PROVIDE ADEQUATE SURVEY OF EXISTING IMPROVEMENTS INCLUDING, BUT NOT LIMITED TO PAVEMENT, MEDIANS, CURB, GUTTER & SIDEWALK PRIOR TO REMOVAL TO ENSURE IMPROVEMENTS ARE REPLACED TO EXISTING LOCATION AT EXISTING OR BETTER CONDITION.
2. PAVEMENT REPLACEMENT/MILL AND OVERLAY LIMITS SHALL BE ON LANE LINES OR PERPENDICULAR TO THE TRAVEL WAY.
3. SEE SHEET D1 FOR TYPICAL AC SECTION.

CALL SOUTHWEST GAS AT
702-651-2111 FOR STANDBY
WHEN EXCAVATING OVER OR
NEAR HIGH PRESSURE GAS LINE

APPROVED FOR CONSTRUCTION
Las Vegas Valley Water District Engineering Services Manager
Date 04/29/14 Project No. 115833

DESIGN POINTS			
POINT NO	NORTHING	EASTING	DESCRIPTION
4.01	644784.2878	239831.1734	M&O - POL
4.02	644776.1548	239830.9209	PVMNT REP AND M&O - POL
4.03	644767.4743	239830.6514	PVMNT REP AND M&O - POL
4.04	644762.7830	239830.5057	M&O - POL
4.05	644783.9549	239915.7834	MEDIAN REP - PC
4.06	644781.9399	239915.7165	MEDIAN REP - PC
4.07	644783.8142	239919.5618	MEDIAN REP - PT
4.08	644781.8577	239919.5422	MEDIAN REP - PT
4.09	644781.6470	239995.5018	MEDIAN REP - PC
4.10	644779.6949	239995.4021	END M&O
4.11	644771.4957	239995.1703	END M&O / PVMNT REP - POL
4.12	644781.3582	240057.2313	PVMNT REP - AP
4.13	644769.7485	240056.9019	PVMNT REP - AP
4.14	644761.0806	240056.6561	PVMNT REP AND M&O - AP
4.15	644758.7476	240056.5899	PVMNT REP AND M&O - AP
4.16	644756.2223	240056.5183	M&O - AP
4.17	644780.9829	240070.3859	PVMNT REP - AP
4.18	644769.3701	240070.0668	PVMNT REP - AP
4.19	644760.7072	240069.8108	PVMNT REP AND M&O - AP
4.20	644758.3761	240069.7447	PVMNT REP AND M&O - AP
4.21	644755.9907	240069.6770	M&O - AP
4.22	644767.8121	240122.7107	PVMNT AND MEDIAN REP - POC
4.23	644767.9537	240123.1641	MEDIAN REP - PT
4.24	644765.9641	240123.2034	PVMNT AND MEDIAN REP - PT
4.25	644759.6542	240429.3163	MEDIAN REP - PC

DESIGN POINTS			
POINT NO	NORTHING	EASTING	DESCRIPTION
4.26	644757.5887	240429.3106	PVMNT AND MEDIAN REP - PC
4.27	644758.4701	240451.9347	BEGIN M&O / PVMNT REP - AP / MEDIAN REP - POC
4.28	644764.1132	240470.9436	MEDIAN REP - PRC
4.29	644762.1413	240471.3683	MEDIAN REP AND M&O - PRC
4.30	644760.4031	240499.4613	PVMNT REP AND M&O - AP
4.31	644757.1162	240499.3674	PVMNT REP AND M&O - AP
4.32	644748.4531	240499.1202	PVMNT REP AND M&O - AP
4.33	644746.1201	240499.0536	PVMNT REP AND M&O - AP
4.34	644768.0925	240508.3143	BEGIN PVMNT REP
4.35	644767.5526	240508.2989	BEGIN PVMNT REP / MEDIAN REP - PT
4.36	644765.4982	240508.2386	END M&O / PVMNT REP - AP / MEDIAN REP - PT
4.37	644760.1569	240508.0878	PVMNT REP AND M&O - AP
4.38	644754.3362	240513.5855	PVMNT REP AND M&O - AP
4.39	644745.7123	240513.3394	PVMNT REP AND M&O - AP
4.40	644767.7119	240521.6435	END PVMNT REP
4.41	644767.2274	240521.6296	END PVMNT AND MEDIAN REP
4.42	644765.1553	240521.5705	END PVMNT AND MEDIAN REP
4.43	644754.1173	240521.2555	END PVMNT REP AND M&O
4.44	644743.3874	240520.9493	END M&O

FAST
Call before you UnderGround
1-702-432-5300
FREEWAY AND ARTERIAL SYSTEM OF TRANSPORTATION

AVOID OVERHEAD POWER LINE CONTACT. IT'S COSTLY.
Call before you Overhead
1-702-227-2929
NV ENERGY ENVIRONMENT AND SAFETY SERVICES DEPARTMENT

Call before you Dig
AVOID CUTTING UNDERGROUND UTILITY LINES. IT'S COSTLY.
Call 811

HANSEN #29930

NO.	DATE	REVISION	BY	APVD

DSGN	DR	CHK	APVD
M. WARNCIK	D. PUBLOW	CH2M HILL	J. GRIEST

DEPARTMENT OF PUBLIC WORKS
ENGINEERING DESIGN SECTION
CITY ENGINEER: DAVID N. BOWERS, P.E.
PROJECT MANAGER: GINA VENGLASS, P.E.
DURANGO HILLS RELIEF SEWER PROJECT

CITY OF LAS VEGAS NEVADA

CH2MHILL®
2485 VILLAGE VIEW DRIVE, SUITE 350, HENDERSON, NV 89074
PHONE 702-389-8175, CH2M HILL Project #240066

PAVEMENT REPLACEMENT
"CS" 67+50 TO "CS" 75+50

PROFESSIONAL ENGINEER - STATE OF NEVADA
JEFFREY N. GRIEST
EXP. 06/30/15
CIVIL
No. 17156
4-22-14

Sheet PR4
18 of 35
DATE April 2014
DWG NO. 307V1045

FILE NAME: DHRS_LAYOUT_C3D_PAVEMENT REPLACEMENT.DWG

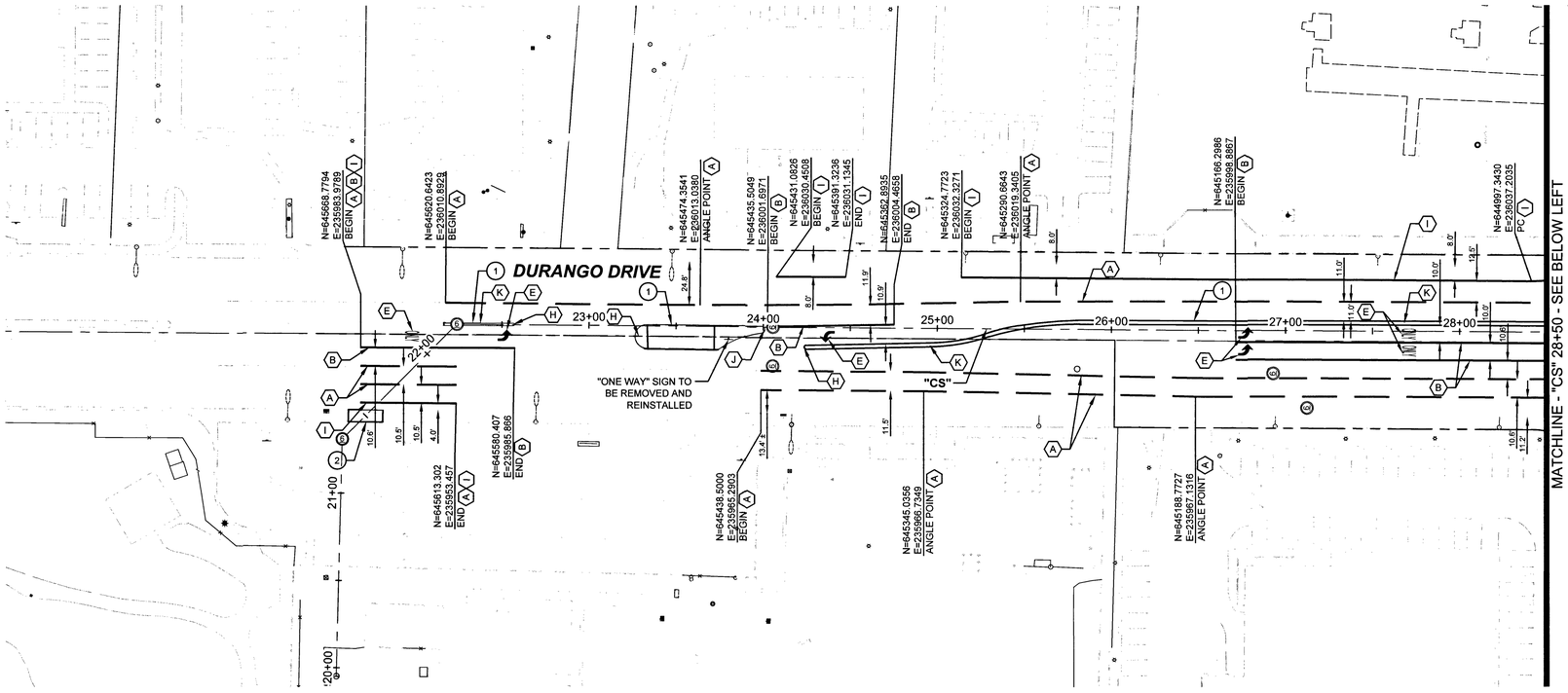

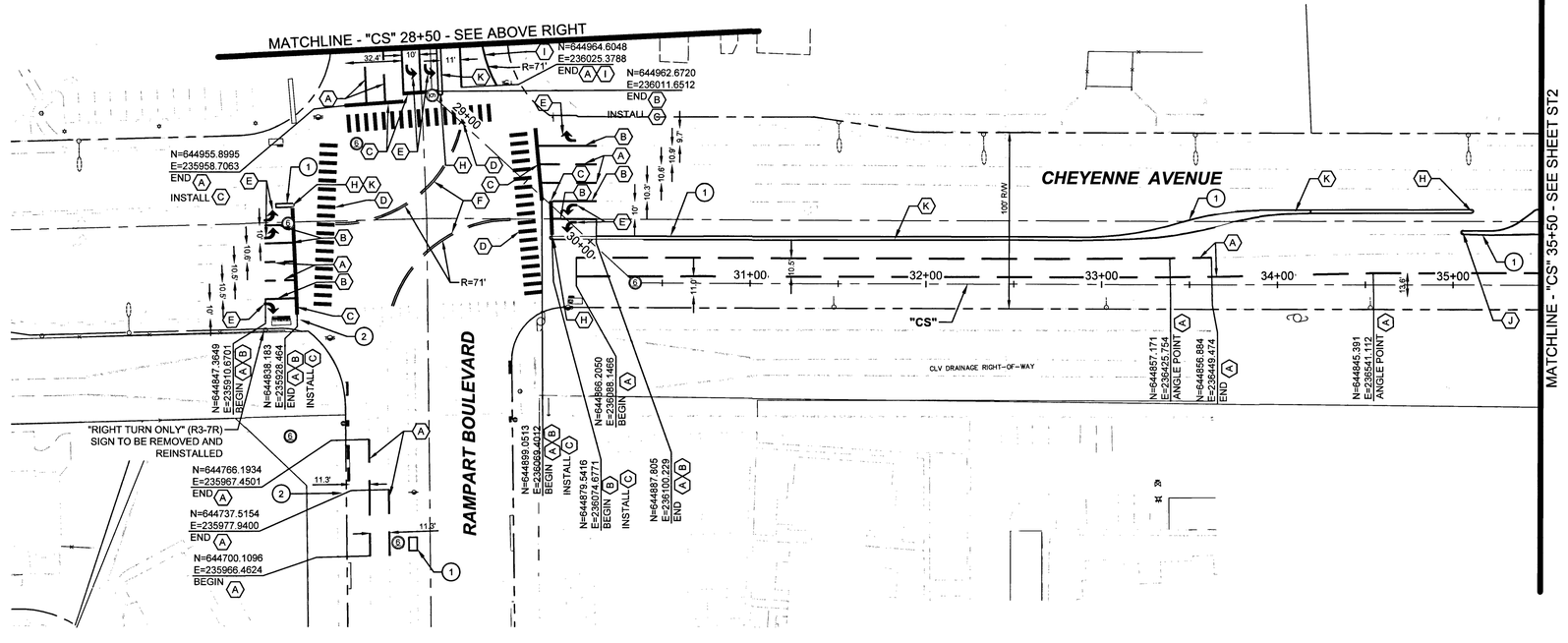

KEY MAP

N

40' 0 20' 40' 80'

Scale In Feet
1 inch = 40 feet

LANE DELINEATION NOTES:

- (A) INSTALL TYPE 4 LANE LINE DELINEATION USING RAISED PAVEMENT MARKERS PER USDCCA STD DWG NO 244.1
- (B) INSTALL STORAGE LINE USING RAISED PAVEMENT MARKERS PER USDCCA STD DWG NO 246
- (C) INSTALL 24" WIDE STOP BAR USING PAVEMENT MARKING FILM PER USDCCA STD DWG NO 254
- (D) INSTALL 10' CROSSWALK USING PAVEMENT MARKING FILM PER USDCCA STD DWG NO 254
- (E) INSTALL "ARROWS" AND/OR "ONLY"S USING PAVEMENT MARKING FILM
- (F) INSTALL CAT TRACKS USING RAISED PAVEMENT MARKERS PER NDOT STD DWG T-37.1.1
- (H) INSTALL YELLOW REFLECTIVE MEDIAN NOSE MARKERS AND REFLECTIVE PAINT PER USDCCA STD DWG NO 248
- (I) INSTALL 6" SOLID WHITE LINE
- (J) INSTALL WHITE REFLECTIVE MEDIAN NOSE MARKERS AND REFLECTIVE PAINT PER USDCCA STD DWG NO 248
- (K) PAINT ENTIRE MEDIAN ISLAND CURB REFLECTIVE YELLOW WHERE MEDIAN IS 4' WIDE OR LESS

LEGEND:

LIMITS OF PAVEMENT RECONSTRUCTION . SEE SHEETS PR1 THRU PR4

MISCELLANEOUS NOTES:

1. LIMITS OF MEDIAN REPLACEMENT. SEE SHEETS PR1 THRU PR4
2. CURB, GUTTER AND SIDEWALK REPLACEMENT. SEE SHEETS PR1 THRU PR4

NOTES:

1. PER SPECIFICATION SECTION 622, CONTRACTOR IS RESPONSIBLE TO PROVIDE ADEQUATE SURVEY OF EXISTING IMPROVEMENTS INCLUDING, BUT NOT LIMITED TO PAVEMENT, MEDIANS, CURB, GUTTER & SIDEWALK PRIOR TO REMOVAL TO ENSURE IMPROVEMENTS ARE REPLACED TO EXISTING LOCATION AT EXISTING OR BETTER CONDITION.

FAST Call before you UnderGround 1-702-432-5300 FREEWAY AND ARTERIAL SYSTEM OF TRANSPORTATION

AVOID OVERHEAD POWER LINE CONTACT. IT'S COSTLY. Call before you Overhead 1-702-227-2929 NV ENERGY ENVIRONMENT AND SAFETY SERVICES DEPARTMENT

Call before you Dig AVOID CUTTING UNDERGROUND UTILITY LINES. IT'S COSTLY. Call 811

HANSEN #29930

NO.	DATE	REVISION	BY	APVD

DSGN	DR	CHK	APVD
M. WARNCIK	D. PUBLOW	CH2M HILL	J. GRIEST

DEPARTMENT OF PUBLIC WORKS
ENGINEERING DESIGN SECTION
CITY ENGINEER : DAVID N. BOWERS, P.E.
PROJECT MANAGER : GINA VENGLASS, P.E.

DURANGO HILLS RELIEF SEWER PROJECT

CITY OF LAS VEGAS NEVADA

CH2MHILL®
2485 VILLAGE VIEW DRIVE, SUITE 350, HENDERSON, NV 89074
PHONE 702-369-6175, CH2M HILL Project #240066

STRIPING AND SIGNING PLAN
"CS" 20+50 TO "CS" 35+50

PROFESSIONAL ENGINEER - STATE OF NEVADA
JEFFREY N. GRIEST
EXP. 06/30/15
CIVIL
No. 17156
4-22-14

Sheet ST1
19 of 35
DATE April 2014
DWG NO. 307V1045

FILE NAME: DHRS_LAYOUT_C3D_STRIPING AND SIGNING.DWG

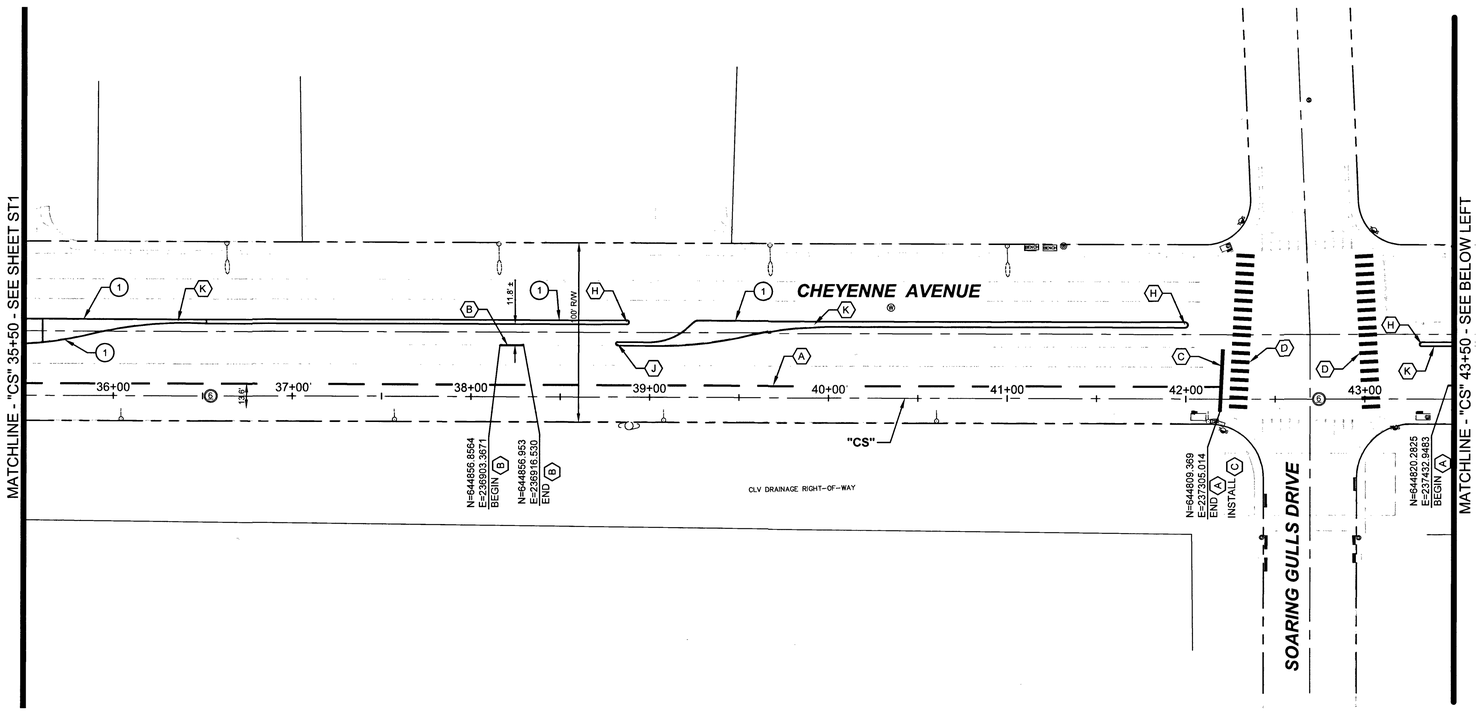

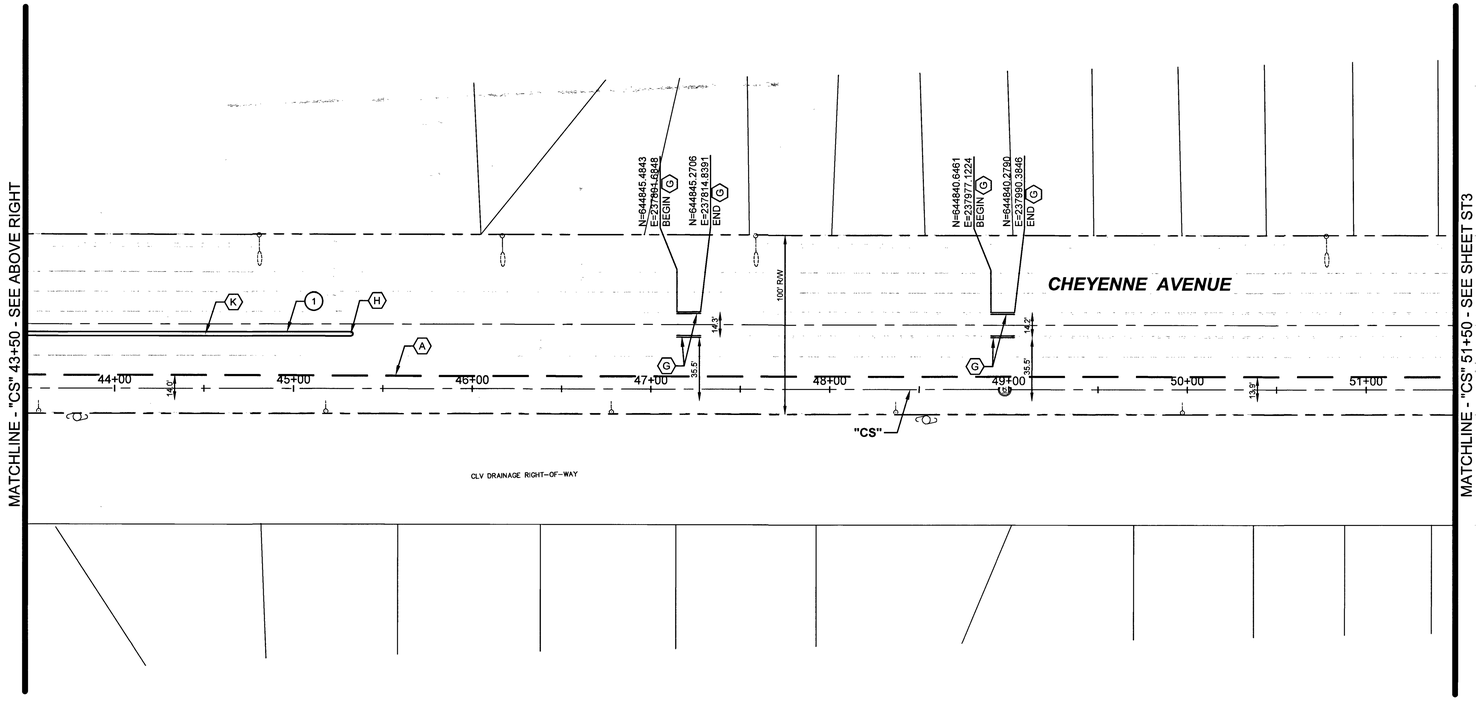

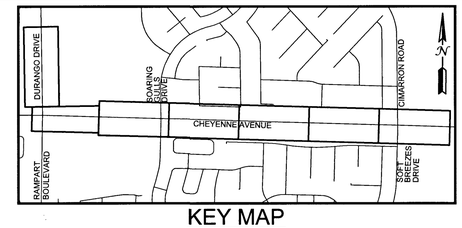

KEY MAP

40' 0 20' 40' 80'
Scale In Feet
1 inch = 40 feet

LANE DELINEATION NOTES:

(A) INSTALL TYPE 4 LANE LINE DELINEATION USING RAISED PAVEMENT MARKERS PER USDCCA STD DWG NO 244.1

(B) INSTALL STORAGE LINE USING RAISED PAVEMENT MARKERS PER USDCCA STD DWG NO 246

(C) INSTALL 24" WIDE STOP BAR USING PAVEMENT MARKING FILM PER USDCCA STD DWG NO 254

(D) INSTALL 10' CROSSWALK USING PAVEMENT MARKING FILM PER USDCCA STD DWG NO 254

(E) INSTALL "ARROWS" AND/OR "ONLY"S USING PAVEMENT MARKING FILM

(G) INSTALL TYPE 2 CENTERLINE DELINEATION USING RAISED PAVEMENT MARKERS PER USDCCA STD DWG NO 244

(H) INSTALL YELLOW REFLECTIVE MEDIAN NOSE MARKERS AND REFLECTIVE PAINT PER USDCCA STD DWG NO 248

(J) INSTALL WHITE REFLECTIVE MEDIAN NOSE MARKERS AND REFLECTIVE PAINT PER USDCCA STD DWG NO 248

(K) PAINT ENTIRE MEDIAN ISLAND CURB REFLECTIVE YELLOW WHERE MEDIAN IS 4' WIDE OR LESS

LEGEND:

LIMITS OF PAVEMENT RECONSTRUCTION . SEE SHEETS PR1 THRU PR4

MISCELLANEOUS NOTES:

(1) LIMITS OF MEDIAN REPLACEMENT. SEE SHEETS PR1 THRU PR4

NOTES:

1. PER SPECIFICATION SECTION 622, CONTRACTOR IS RESPONSIBLE TO PROVIDE ADEQUATE SURVEY OF EXISTING IMPROVEMENTS INCLUDING, BUT NOT LIMITED TO PAVEMENT, MEDIANS, CURB, GUTTER & SIDEWALK PRIOR TO REMOVAL TO ENSURE IMPROVEMENTS ARE REPLACED TO EXISTING LOCATION AT EXISTING OR BETTER CONDITION.

FAST Call before you UnderGround 1-702-432-5300 FREEWAY AND ARTERIAL SYSTEM OF TRANSPORTATION

AVOID OVERHEAD POWER LINE CONTACT. IT'S COSTLY. Call before you Overhead 1-702-227-2929 NV ENERGY ENVIRONMENT AND SAFETY SERVICES DEPARTMENT

Call before you Dig AVOID CUTTING UNDERGROUND UTILITY LINES. IT'S COSTLY. Call 811

HANSEN #29930

NO.	DATE	REVISION	BY	APVD

DSGN	DR	CHK	APVD
M. WARNCIK	D. PUBLOW	CH2M HILL	J. GRIEST

DEPARTMENT OF PUBLIC WORKS
ENGINEERING DESIGN SECTION
CITY ENGINEER : DAVID N. BOWERS, P.E.
PROJECT MANAGER : GINA VENGLASS, P.E.

DURANGO HILLS RELIEF SEWER PROJECT

CITY OF LAS VEGAS NEVADA

CH2MHILL®
2485 VILLAGE VIEW DRIVE, SUITE 350, HENDERSON, NV 89074
PHONE: 702-369-8175; CH2M HILL Project #240068

STRIPING AND SIGNING PLAN "CS" 35+50 TO "CS" 51+50

PROFESSIONAL ENGINEER - STATE OF NEVADA JEFFREY N. GRIEST EXP. 06/30/15 CIVIL No. 17156 4-22-14

Sheet ST2
20 of 35
DATE April 2014
DWG NO. 307V1045

FILE NAME: DHRS_LAYOUT_C3D_STRIPING AND SIGNING.DWG

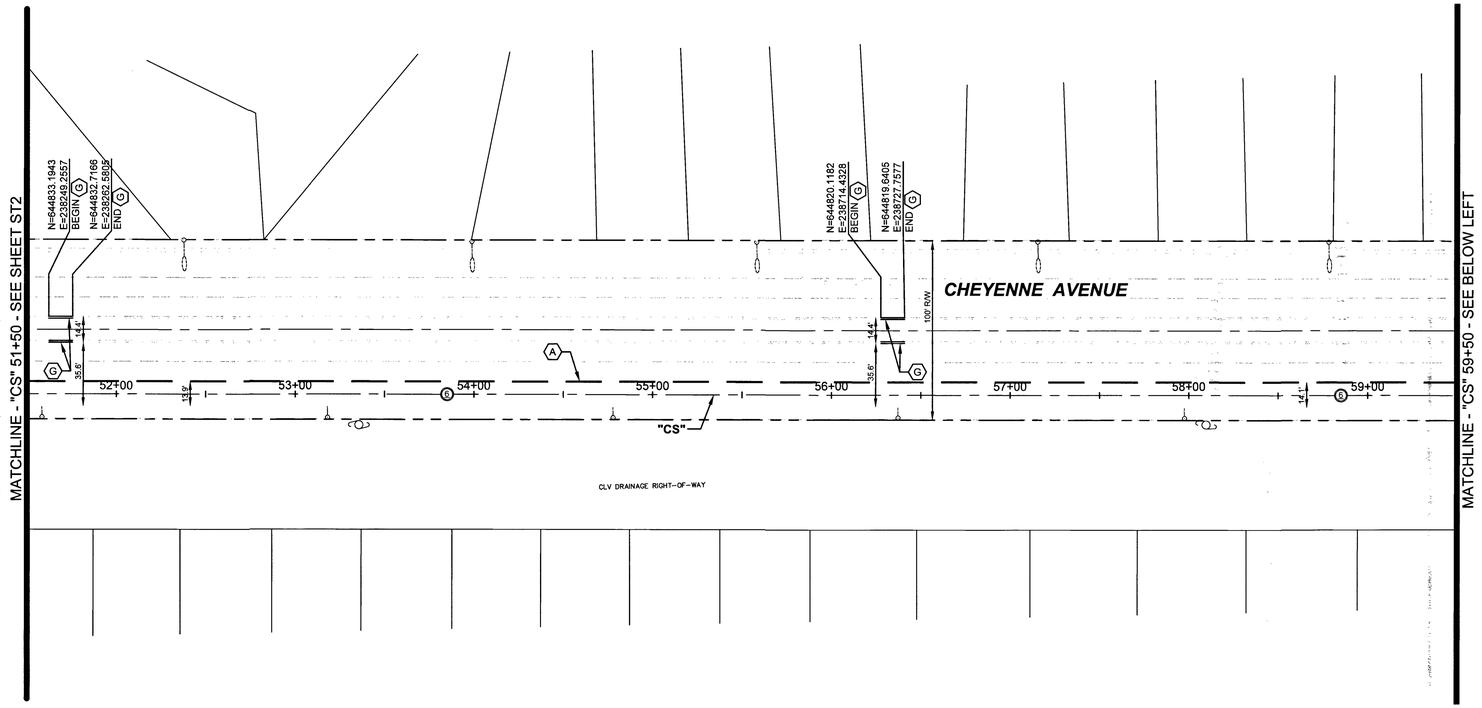

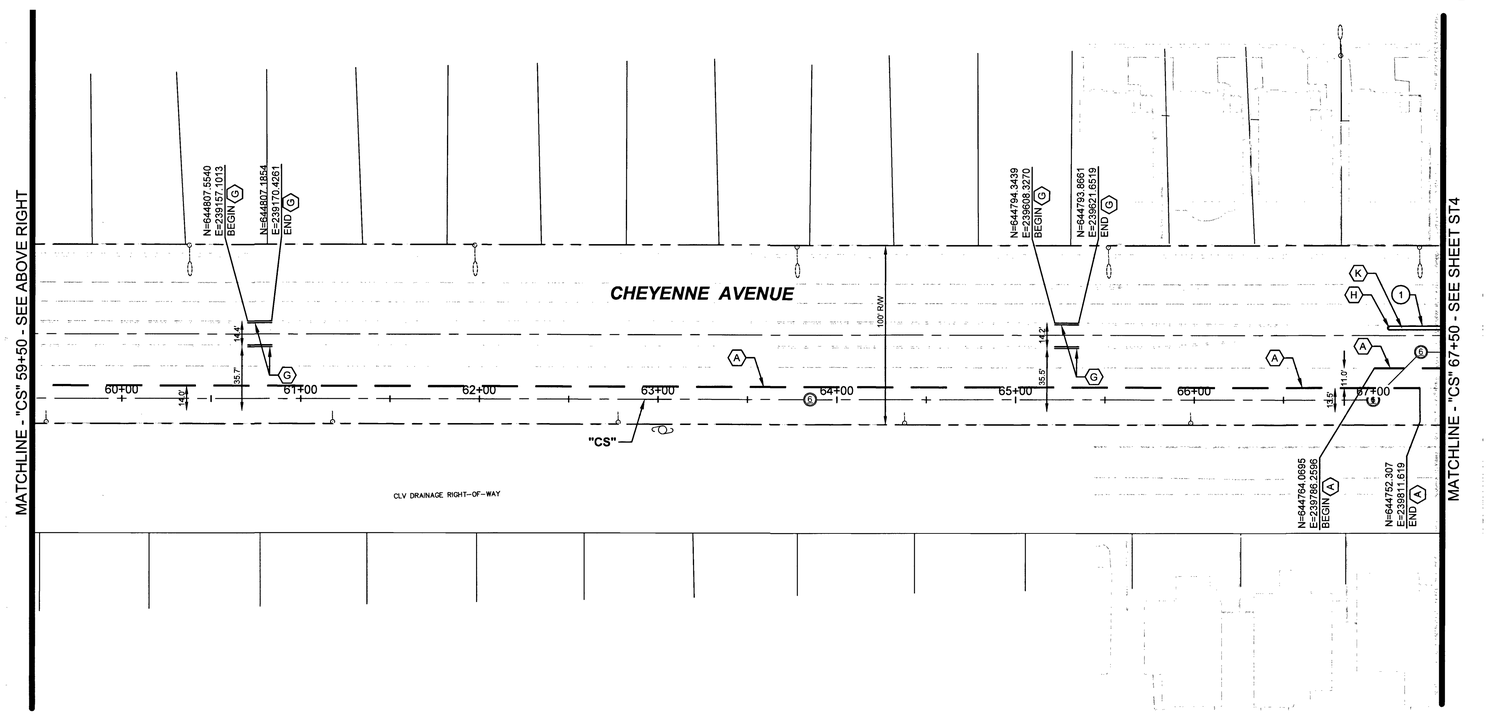

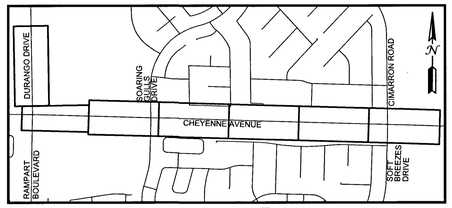

KEY MAP

40' 0 20' 40' 80'

Scale In Feet
1 inch = 40 feet

LANE DELINEATION NOTES:

(A) INSTALL TYPE 4 LANE LINE DELINEATION USING RAISED PAVEMENT MARKERS PER USDCCA STD DWG NO 244.1

(G) INSTALL TYPE 2 CENTERLINE DELINEATION USING RAISED PAVEMENT MARKERS PER USDCCA STD DWG NO 244

(H) INSTALL YELLOW REFLECTIVE MEDIAN NOSE MARKERS AND REFLECTIVE PAINT PER USDCCA STD DWG NO 248

(K) PAINT ENTIRE MEDIAN ISLAND CURB REFLECTIVE YELLOW WHERE MEDIAN IS 4' WIDE OR LESS

MISCELLANEOUS NOTES:

(1) LIMITS OF MEDIAN REPLACEMENT. SEE SHEETS PR1 THRU PR4

LEGEND:

LIMITS OF PAVEMENT RECONSTRUCTION .
SEE SHEETS PR1 THRU PR4

NOTES:

1. PER SPECIFICATION SECTION 622, CONTRACTOR IS RESPONSIBLE TO PROVIDE ADEQUATE SURVEY OF EXISTING IMPROVEMENTS INCLUDING, BUT NOT LIMITED TO PAVEMENT, MEDIANS, CURB, GUTTER & SIDEWALK PRIOR TO REMOVAL TO ENSURE IMPROVEMENTS ARE REPLACED TO EXISTING LOCATION AT EXISTING OR BETTER CONDITION.

FAST
Call before you UnderGround
1-702-432-5300
FREEWAY AND ARTERIAL SYSTEM OF TRANSPORTATION

AVOID OVERHEAD POWER LINE CONTACT. IT'S COSTLY.
Call before you Overhead
1-702-227-2929
NV ENERGY ENVIRONMENT AND SAFETY SERVICES DEPARTMENT

Call before you Dig
AVOID CUTTING UNDERGROUND UTILITY LINES. IT'S COSTLY.
Call 811

HANSEN #29930

NO.	DATE	REVISION	BY	APVD

DSGN	DR	CHK	APVD
M. WARNCIK	D. PUBLOW	CH2M HILL	J. GRIEST

DEPARTMENT OF PUBLIC WORKS
ENGINEERING DESIGN SECTION
CITY ENGINEER : DAVID N. BOWERS, P.E.
PROJECT MANAGER : GINA VENGLASS, P.E.
DURANGO HILLS RELIEF SEWER PROJECT

CITY OF LAS VEGAS NEVADA

CH2MHILL®
2485 VILLAGE VIEW DRIVE, SUITE 350, HENDERSON, NV 89074
PHONE 702-369-6175, CH2M HILL Project #240086

STRIPING AND SIGNING PLAN
"CS" 51+50 TO "CS" 67+50

PROFESSIONAL ENGINEER - STATE OF NEVADA
JEFFREY N. GRIEST
EXP. 06/30/15
CIVIL
No. 17156
4-22-14

Sheet ST3
21 of 35
DATE April 2014
DWG NO. 307V1045

FILE NAME: DHRS_LAYOUT_C3D_STRIPING AND SIGNING.DWG

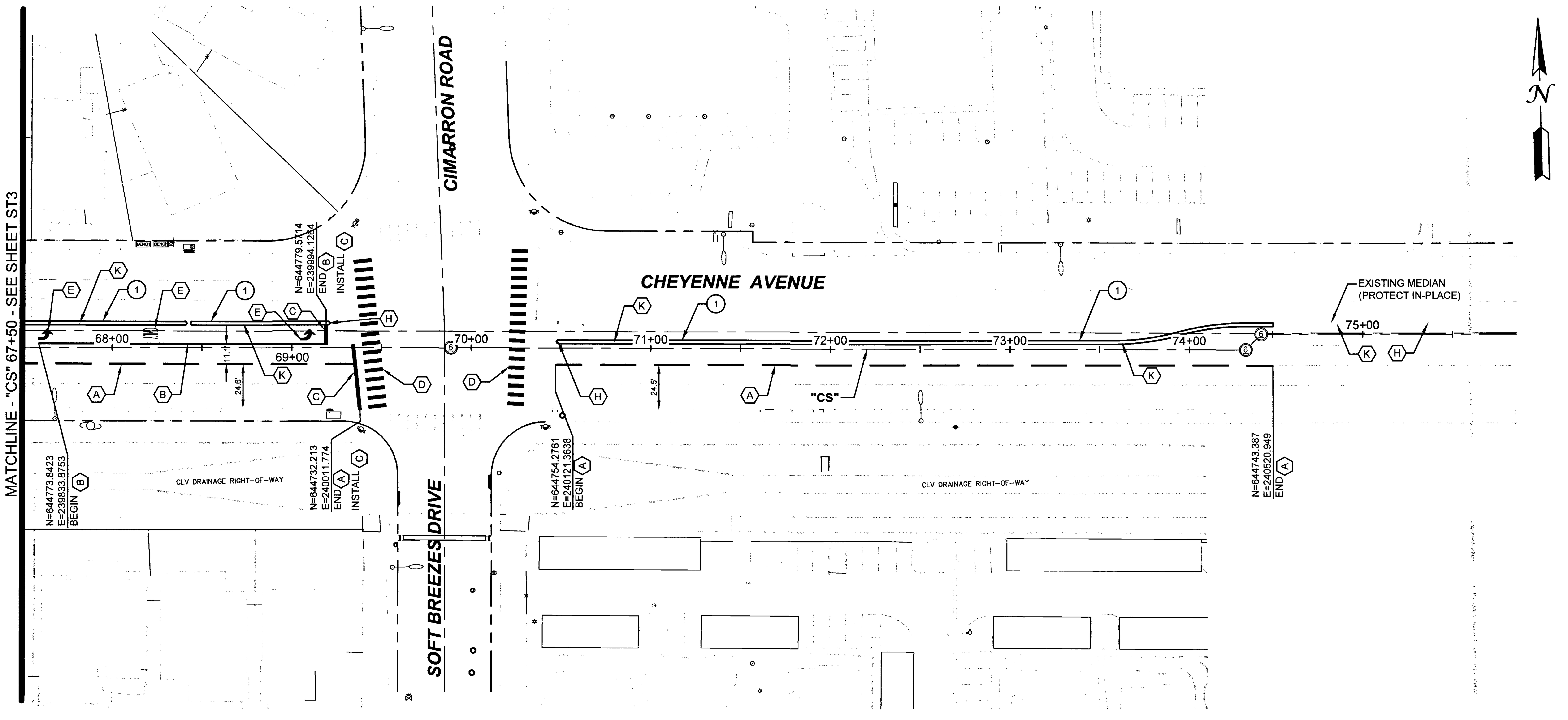

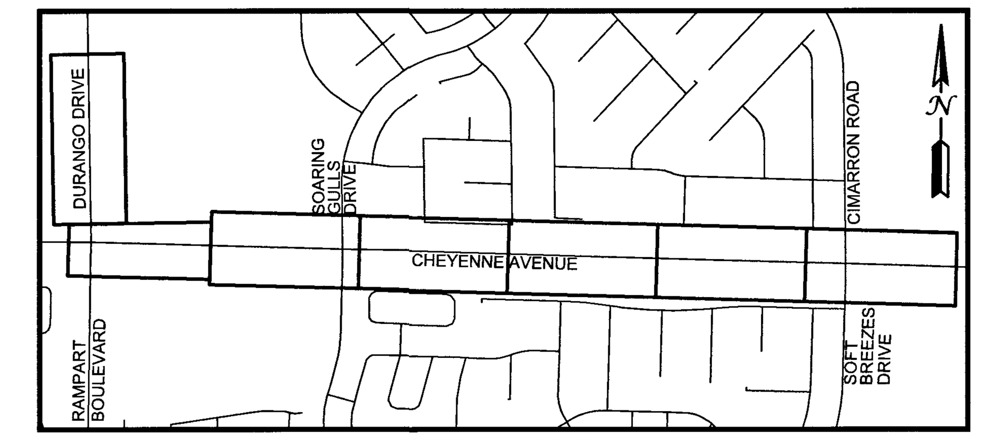

KEY MAP

40' 0 20' 40' 80'
Scale In Feet
1 inch = 40 feet

LANE DELINEATION NOTES:

- (A) INSTALL TYPE 4 LANE LINE DELINEATION USING RAISED PAVEMENT MARKERS PER USDCCA STD DWG NO 244.1
- (B) INSTALL STORAGE LINE USING RAISED PAVEMENT MARKERS PER USDCCA STD DWG NO 246
- (C) INSTALL 24" WIDE STOP BAR USING PAVEMENT MARKING FILM PER USDCCA STD DWG NO 254
- (D) INSTALL 10' CROSSWALK USING PAVEMENT MARKING FILM PER USDCCA STD DWG NO 254
- (E) INSTALL "ARROWS" AND/OR "ONLY"S USING PAVEMENT MARKING FILM
- (H) INSTALL YELLOW REFLECTIVE MEDIAN NOSE MARKERS AND REFLECTIVE PAINT PER USDCCA STD DWG NO 248
- (K) PAINT ENTIRE MEDIAN ISLAND CURB REFLECTIVE YELLOW WHERE MEDIAN IS 4' WIDE OR LESS

LEGEND:

LIMITS OF PAVEMENT RECONSTRUCTION. SEE SHEETS PR1 THRU PR4

MISCELLANEOUS NOTES:

(1) LIMITS OF MEDIAN REPLACEMENT. SEE SHEETS PR1 THRU PR4

NOTES:

1. PER SPECIFICATION SECTION 622, CONTRACTOR IS RESPONSIBLE TO PROVIDE ADEQUATE SURVEY OF EXISTING IMPROVEMENTS INCLUDING, BUT NOT LIMITED TO PAVEMENT, MEDIANS, CURB, GUTTER & SIDEWALK PRIOR TO REMOVAL TO ENSURE IMPROVEMENTS ARE REPLACED TO EXISTING LOCATION AT EXISTING OR BETTER CONDITION.

FAST
Call before you UnderGround
1-702-432-5300
FREEWAY AND ARTERIAL SYSTEM OF TRANSPORTATION

AVOID OVERHEAD POWER LINE CONTACT. IT'S COSTLY.
Call before you Overhead
1-702-227-2929
NV ENERGY ENVIRONMENT AND SAFETY SERVICES DEPARTMENT

Call before you Dig
AVOID CUTTING UNDERGROUND UTILITY LINES. IT'S COSTLY.
Call 811

HANSEN #29930

NO.	DATE	REVISION	BY	APVD
DSGN M. WARNICK	DR D. PUBLOW	CHK CH2M HILL	APVD J. GRIEST	

DEPARTMENT OF PUBLIC WORKS
ENGINEERING DESIGN SECTION
CITY ENGINEER : DAVID N. BOWERS, P.E.
PROJECT MANAGER : GINA VENGLASS, P.E.

DURANGO HILLS RELIEF SEWER PROJECT

CITY OF LAS VEGAS NEVADA

CH2MHILL
2485 VILLAGE VIEW DRIVE, SUITE 350, HENDERSON, NV 89074
PHONE 702-369-6175, CH2M HILL Project #240566

STRIPING AND SIGNING PLAN
"CS" 67+50 TO "CS" 75+50

PROFESSIONAL ENGINEER - STATE OF NEVADA
JEFFREY N. GRIEST
EXP. 06/30/15
CIVIL
No. 17156
4-22-14

Sheet ST4
22 of 35

DATE April 2014
DWG NO. 307V1045

FILE NAME: DHRS_LAYOUT_C3D_STRIPING AND SIGNING.DWG

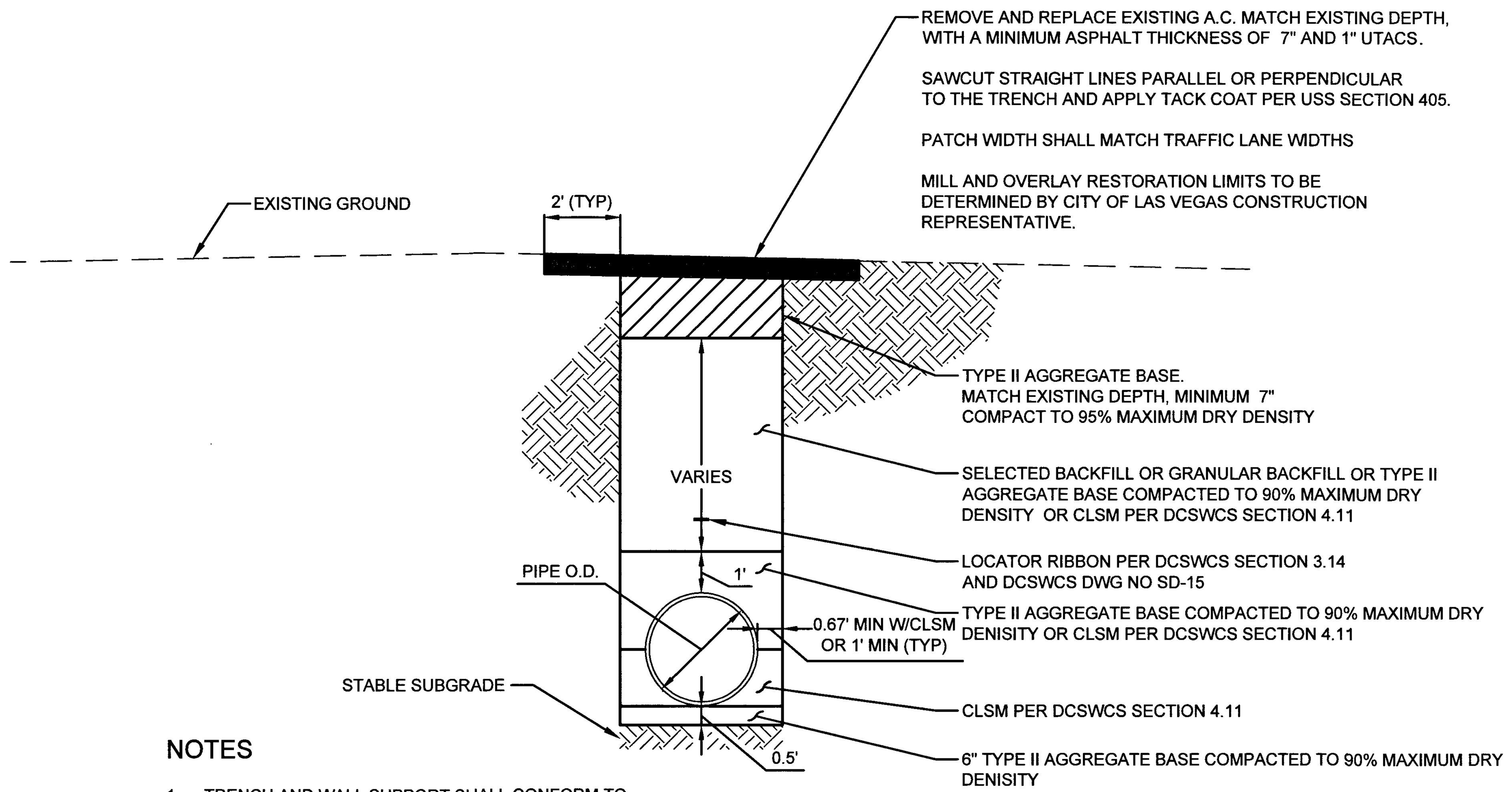

NOTES

1. TRENCH AND WALL SUPPORT SHALL CONFORM TO OSHA REQUIREMENTS.
2. TRENCH SECTIONS SHOWN ARE MINIMUM REQUIREMENTS, SHORING IS NOT SHOWN.
3. TRENCH DIMENSIONS SHOWN WERE USED TO DETERMINE QUANTITIES. IF CONTRACTOR ELECTS TO MODIFY THE TRENCH DIMENSIONS, THE COST SHALL BE CONSIDERED INCIDENTAL TO OTHER BID ITEMS AND AT NO ADDITIONAL COST TO THE OWNER

A RECTANGULAR TRENCH SECTION
NOT TO SCALE

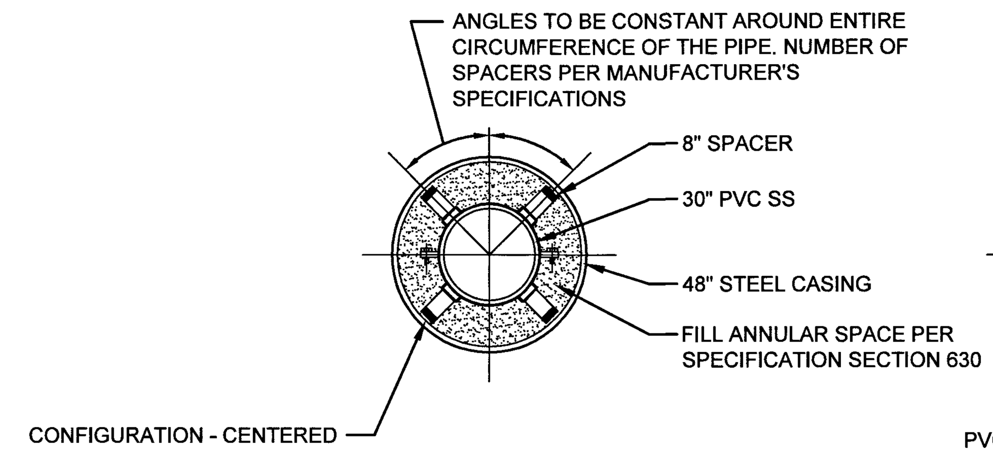

CROSS-SECTION

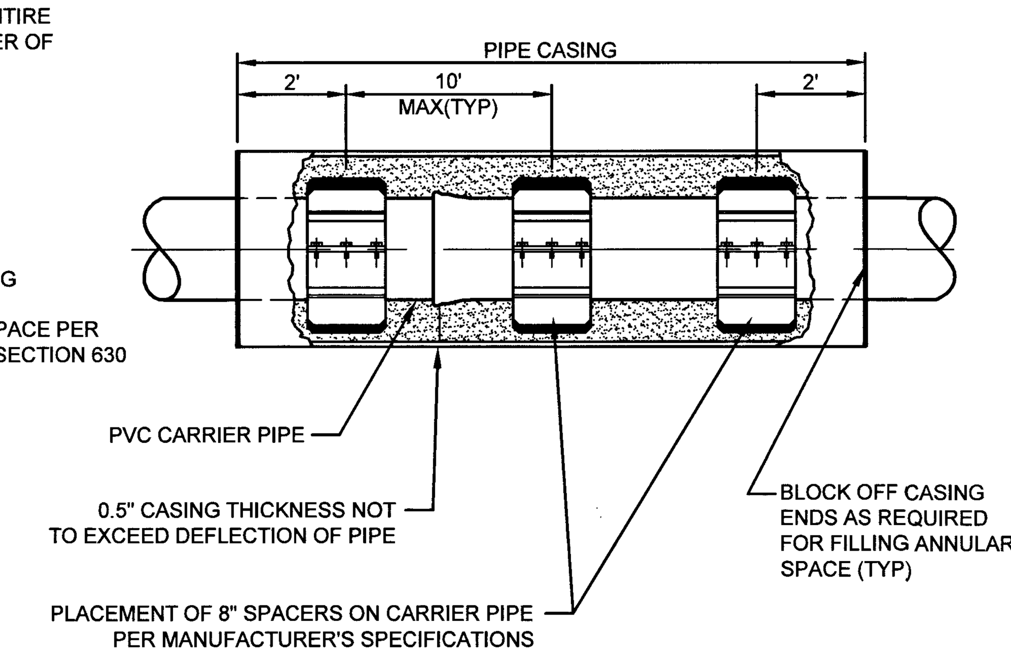

NOTES:

1. PVC PIPE JOINTS INSIDE PIPE CASING TO BE RESTRAINED (TYP).
2. INTERIOR OF CASING TO BE GROUND SMOOTH AND LUBRICATED FOR SPACER INSTALLATION.
3. ALL CONDUITS AND FITTINGS INSTALLED WITHIN CASING IN ACCORDANCE WITH SPECIFICATION SECTION 630.
4. ENTIRE PIPE CASING TO BE INSTALLED AS SHOWN ON DRAWINGS. SEE SPECIFICATION SECTION 630 FOR FURTHER REQUIREMENTS.
5. END OF CASING SHALL BE 18" MINIMUM FROM MANHOLE

B 48" CASING ASSEMBLY DETAIL
NOT TO SCALE

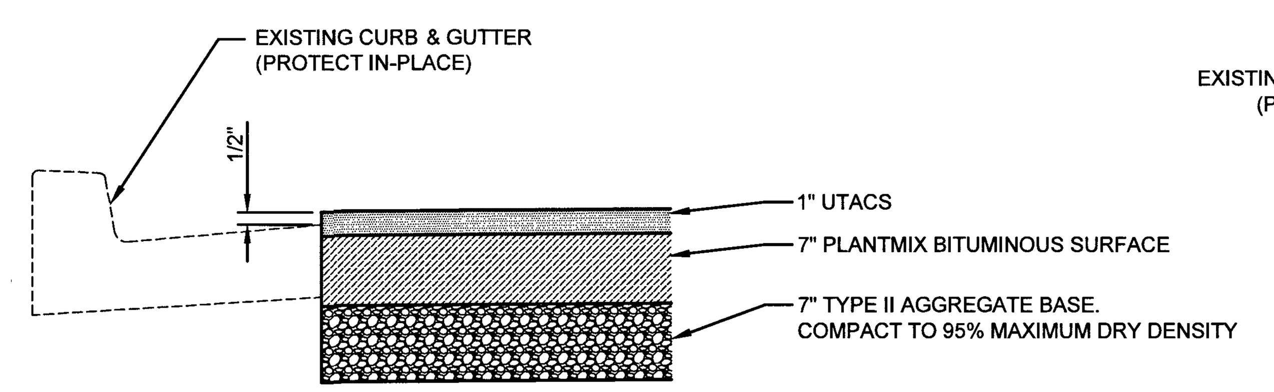

C PAVEMENT SECTION
NOT TO SCALE

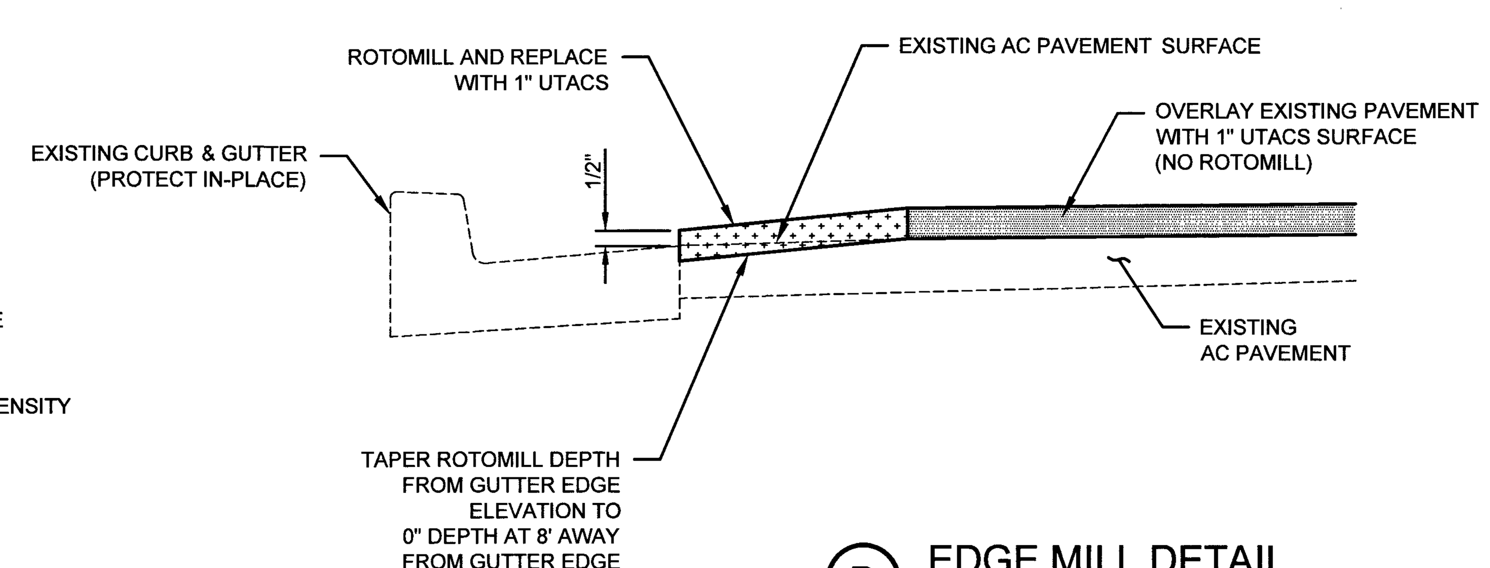

D EDGE MILL DETAIL
NOT TO SCALE

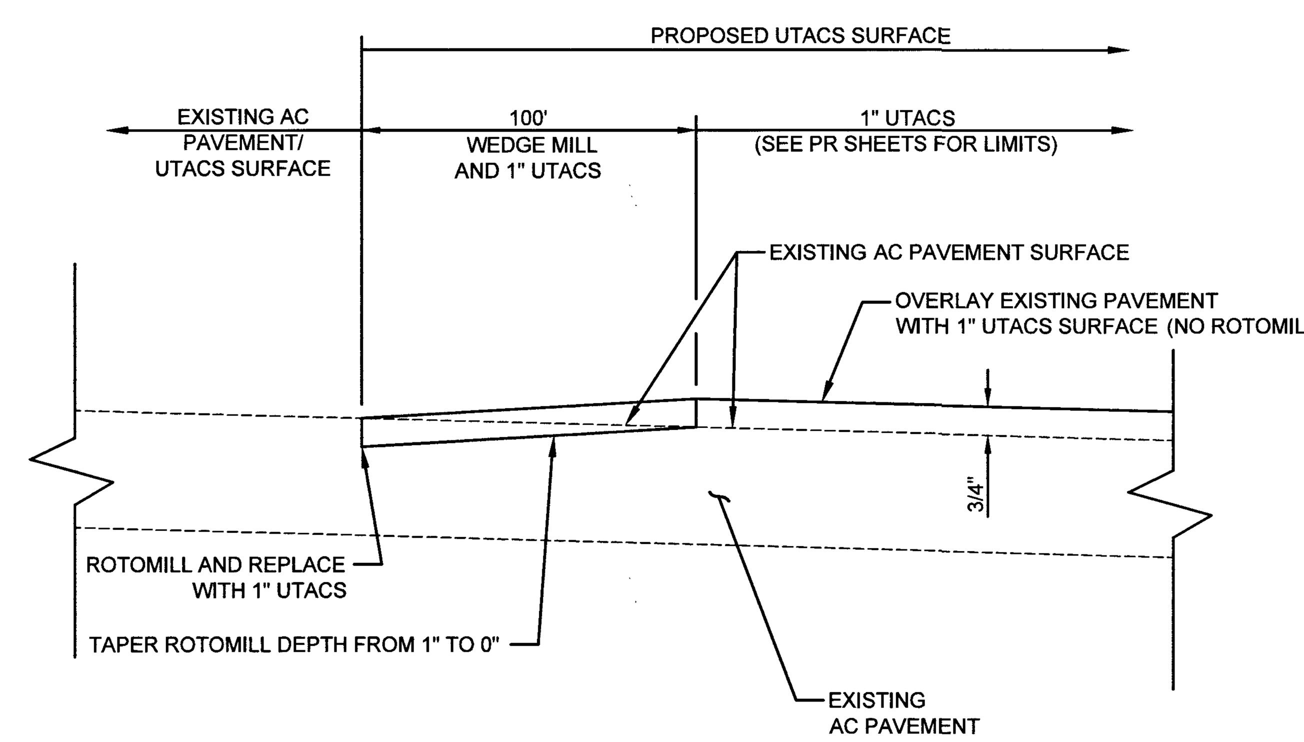

E WEDGE MILL DETAIL
NOT TO SCALE

FAST Call before you UnderGround 1-702-432-5300 FREEWAY AND ARTERIAL SYSTEM OF TRANSPORTATION

AVOID OVERHEAD POWER LINE CONTACT. IT'S COSTLY. Call before you Overhead 1-702-227-2929 NV ENERGY ENVIRONMENT AND SAFETY SERVICES DEPARTMENT

Call before you Dig AVOID CUTTING UNDERGROUND UTILITY LINES. IT'S COSTLY. Call 811

HANSEN #29930

NO.	DATE	REVISION	BY	APVD
DSGN M. WARNICK	DR D. PUBLOW	CHK CH2M HILL	APVD J. GRIEST	

DEPARTMENT OF PUBLIC WORKS
ENGINEERING DESIGN SECTION
CITY ENGINEER : DAVID N. BOWERS, P.E.
PROJECT MANAGER : GINA VENGLASS, P.E.

DURANGO HILLS RELIEF SEWER PROJECT

CITY OF LAS VEGAS NEVADA

CH2MHILL
2485 VILLAGE VIEW DRIVE, SUITE 350, HENDERSON, NV 89074 PHONE 702-369-6175, CH2M HILL Project #240066

MISCELLANEOUS DETAILS

PROFESSIONAL ENGINEER - STATE OF NEVADA JEFFREY N. GRIEST EXP. 06/30/15 CIVIL No. 17156 4-22-14

Sheet D1
23 of 35

DATE April 2014
DWG NO. 307V1045

FILE NAME: DHRS_LAYOUT_C3D_DETAILS.DWG

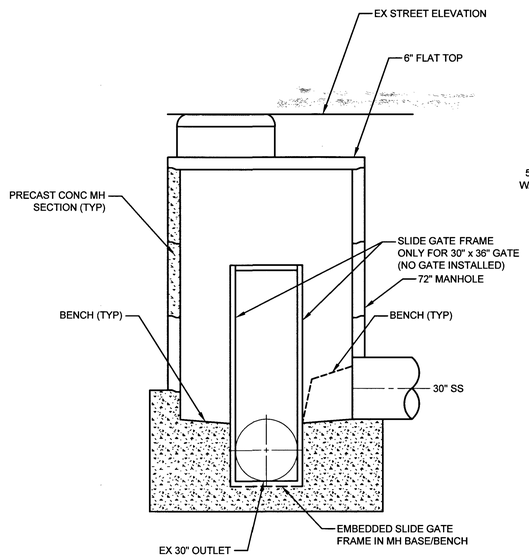

SECTION A-A
NOT TO SCALE

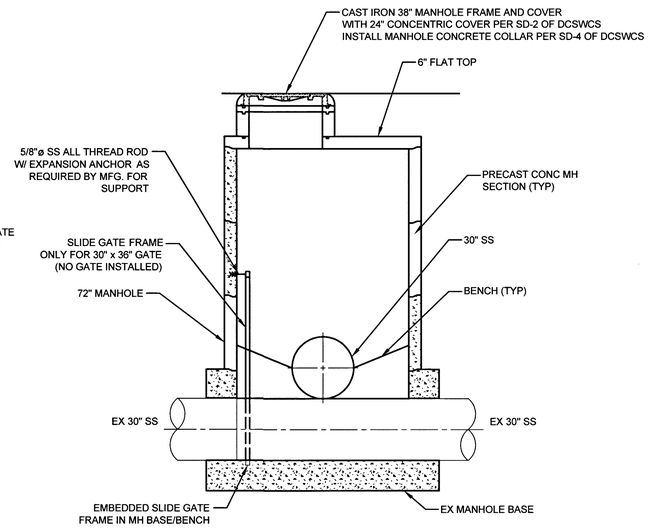

SECTION B-B
NOT TO SCALE

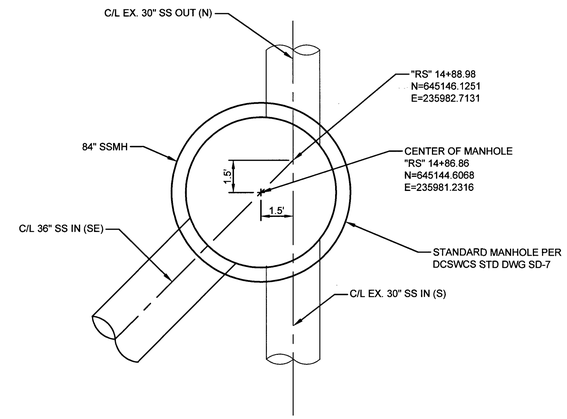

B 84" OFFSET SSMH
NOT TO SCALE

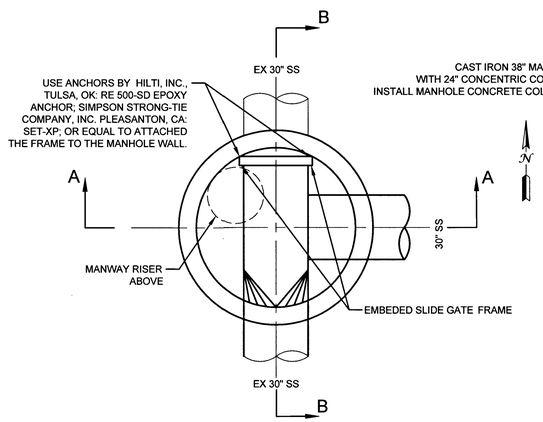

INSIDE PLAN
NOT TO SCALE

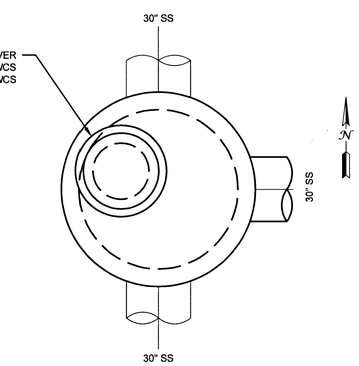

TOP PLAN
NOT TO SCALE

A DIVERSION STRUCTURE
NOT TO SCALE

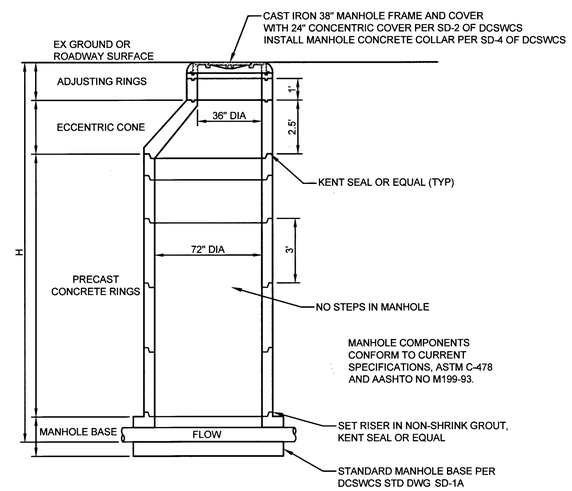

C DEEP MANHOLE DETAIL
FOR USE WHEN H > 18' (RIM TO INVERT)
NOT TO SCALE

FAST
Call before you UnderGround
1-702-432-5300
FREEWAY AND ARTERIAL SYSTEM OF TRANSPORTATION

AVOID OVERHEAD POWER LINE CONTACT. IT'S COSTLY.
Call before you Overhead
1-702-227-2929
NV ENERGY ENVIRONMENT AND SAFETY SERVICES DEPARTMENT

Call before you Dig
AVOID CUTTING UNDERGROUND UTILITY LINES. IT'S COSTLY.
Call 811

HANSEN #29930

NO.	DATE	REVISION	BY	APVD

DSGN M. WARNICK | DR D. PUBLOW | CHK CH2M HILL | APVD J. GRIEST

DEPARTMENT OF PUBLIC WORKS
ENGINEERING DESIGN SECTION
CITY ENGINEER : DAVID N. BOWERS, P.E.
PROJECT MANAGER : GINA VENGLASS, P.E.
DURANGO HILLS RELIEF SEWER PROJECT

CITY OF LAS VEGAS NEVADA

CH2MHILL®
2440 W. CORPORATE PRESERVE DR., SUITE 250 | HENDERSON, NV 89074
PHONE: (702) 567-6175, CHECK FILE FORMAT HENDERSON

MANHOLE DETAILS

PROFESSIONAL ENGINEER - STATE OF NEVADA
JEFFREY N. GRIEST
EXP. 06/30/15
CIVIL
No. 17156
4-22-14

Sheet D2
24 of 35
DATE April 2014
DWG NO. 307V1045

FILE NAME: DHRS_LAYOUT_C3D_DETAILS.DWG

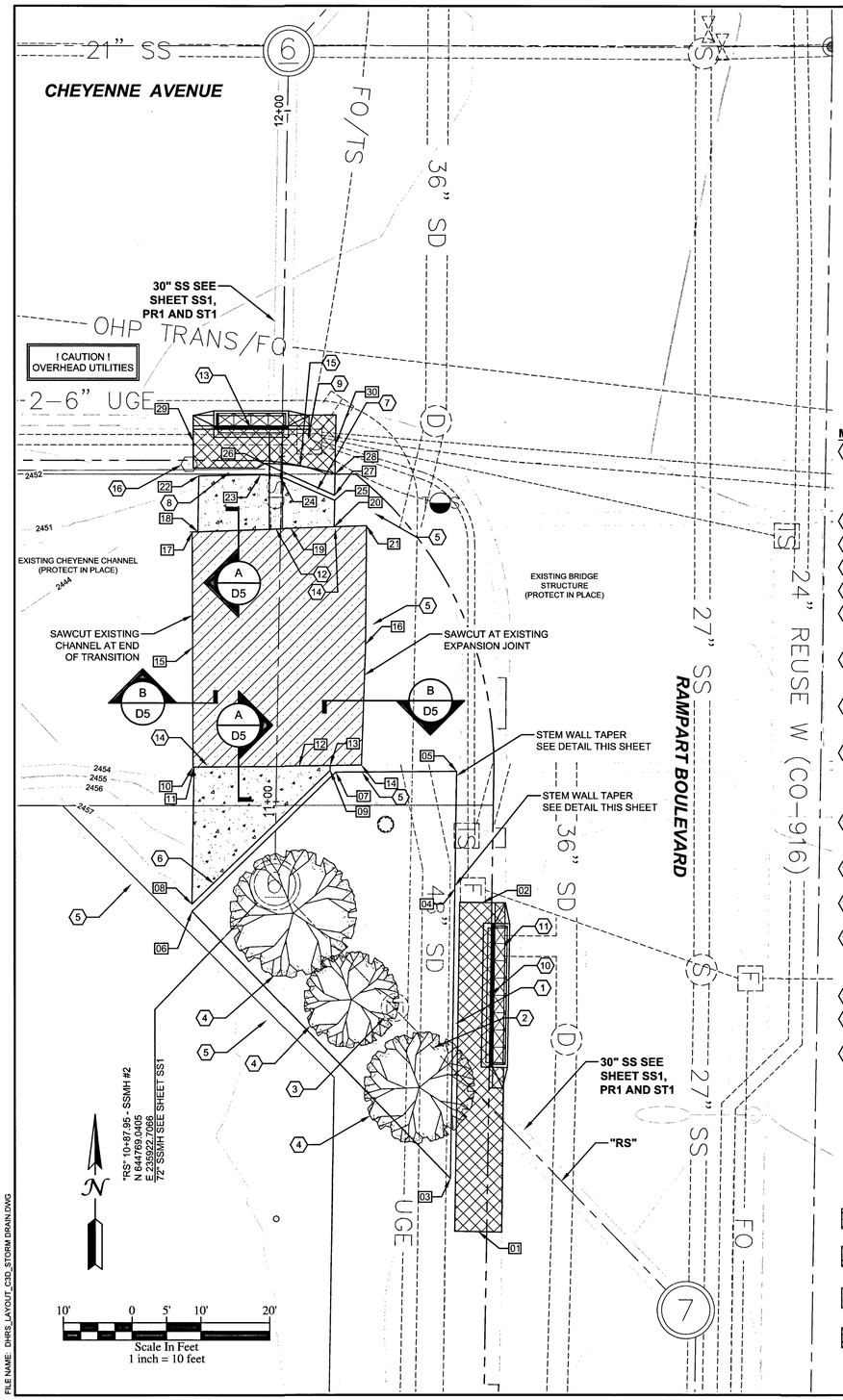

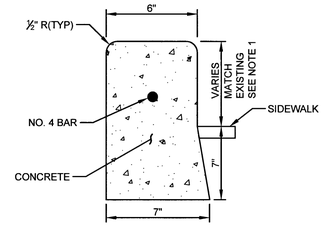

NOTE:
1. WEAKEND PLANE JOINT EVERY 10', FOR JOINT DETAIL SEE USDCCA DWG NO 234.
2. ½" EXPANSION JOINT AT ALL COLD JOINTS, FOR JOINT DETAIL SEE USDCCA DWG NO 234.

A STEM WALL
NOT TO SCALE

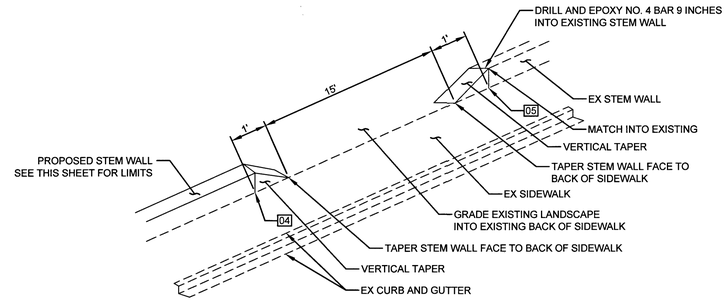

B STEM WALL TAPER
NOT TO SCALE

MISCELLANEOUS CONSTRUCTION NOTES:

1. REMOVE AND REPLACE 42 LF OF EXISTING STEM WALL FROM DESIGN POINT 03 TO 04 . REMOVE STEM WALL FROM DESIGN POINT 04 TO 05 . INSTALL STEM WALL TAPERS AT DESIGN POINT 04 AND 05 . SEE THIS SHEET FOR STEM WALL DETAIL AND STEM WALL TAPER DETAIL.
2. EXISTING 48" SD (PROTECT IN-PLACE)
3. EXISTING ELEC MH (TO BE RELOCATED BY OTHERS)
4. EXISTING TREES TO BE REMOVED
5. EXISTING DECORATIVE CMU WALL (PROTECT IN-PLACE)
6. REMOVE AND REPLACE 32 LF OF DECORATIVE CMU WALL & PILLAR. MATCH EXISTING DESIGN, TEXTURE AND COLORS. SEE WALL DETAILS ON SHEET D8.
7. REMOVE AND REPLACE 15 LF OF DECORATIVE CMU WALL & PILLAR. MATCH EXISTING DESIGN, TEXTURE AND COLORS. SEE WALL DETAILS ON SHEET D8.
8. REMOVE AND REPLACE 10 LF OF WROUGHT IRON FENCE AND CURBING. MATCH EXISTING FENCE DESIGN AND COLOR. SEE WROUGHT IRON FENCE DETAIL ON SHEET D8.
9. REMOVE AND REPLACE TRAFFIC SIGNAL BOX. CONTRACTOR SHALL PROTECT IN PLACE OR ADJUST TRAFFIC SIGNAL CONDUIT DURING CONSTRUCTION AND REPLACE TO EXISTING CONDITIONS (SEE TS SHEETS FOR CONDUIT AND WIRE SCHEDULE).
10. REMOVE AND REPLACE DROP INLET WITH 20' TYPE "DM2" PER USDCCA STD DWG NO 412.1
N = 644752.9925, E = 235953.9905
11. CONNECT DROP INLET TO EXISTING 36" SD PIPE
N = 644760.09±, E = 235955.96±
12. CONNECT 18" RCP TO RECTANGULAR CHANNEL
N = 644820.6048, E = 235922.8707
13. REMOVE AND REPLACE DROP INLET WITH 10' TYPE "DM2" DROP INLET PER USDCCA STD DWG NO 412.1. INSTALL 13.89 LF 18" RCP SEE STORM DRAIN PROFILE ON THIS SHEET.
N = 644834.9895, 235919.2703
14. REMOVE AND REPLACE CHANNEL LADDER. SEE SHEET D6.
15. REMOVE AND REPLACE 30 LF OF EXISTING STEM WALL. SEE THIS SHEET FOR DETAIL.
16. EXISTING SIGN TO BE REMOVED AND REINSTALLED. SEE SHEET ST1.

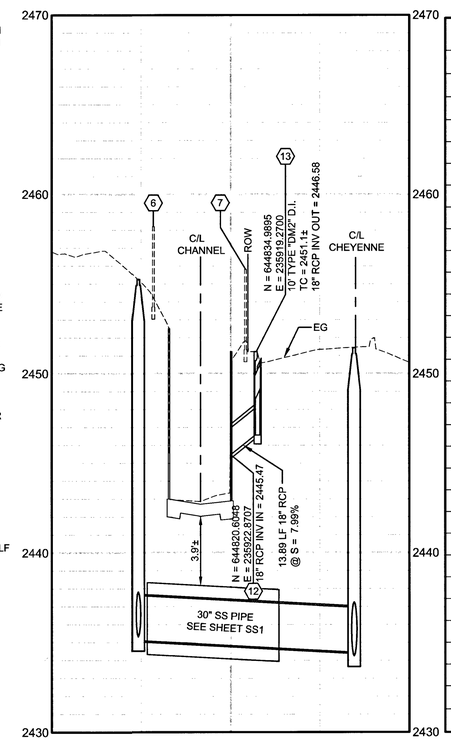

18" RCP STORM DRAIN LATERAL

DESIGN POINTS			
POINT NO	NORTHING	EASTING	DESCRIPTION
01	644718.7522	235952.2235	BEGIN CURB, GUTTER & SIDEWALK REP
02	644766.4261	235952.8542	END CURB, GUTTER & SIDEWALK REP
03	644726.4132	235948.1731	BEGIN LANDSCAPE REP/SEE MISC CONST NOTE 1
04	644768.4223	235948.8613	SEE MISC CONST NOTE 1
05	644785.4201	235949.1351	END LANDSCAPE REP / CURB REMOVAL
06	644765.1705	235910.6820	END LANDSCAPE REP
07	644785.2845	235931.5403	END LANSCAPE REP
08	644766.2102	235910.6548	BEGIN SLOPE PVMNT REP
09	644785.5404	235930.7286	BEGIN SLOPE PVMNT REP
10	644786.0819	235910.8485	BEGIN CHANNEL REP
11	644786.0828	235910.9848	END SLOPE PVMNT REP
12	644786.1793	235926.2658	BEGIN CHANNEL REP / SLOPE PVMNT - AP
13	644786.2473	235930.7403	END SLOPE PVMNT REP
14	644786.3164	235935.2810	BEGIN CHANNEL REP
15	644803.3794	235910.7796	CHANNEL REP - FL
16	644803.8216	235935.8828	CHANNEL REP - AP
17	644820.1140	235910.7129	END CHANNEL REP
18	644820.1450	235911.5505	BEGIN SLOPE PVMNT REP
19	644820.6312	235925.0167	CHANNEL REP / SLOPE PVMNT - AP
20	644820.8367	235931.3147	BEGIN SLOPE PVMNT REP
21	644820.9896	235935.9979	END CHANNEL REP
22	644828.2405	235911.6850	END SLOPE PVMNT REP
23	644828.3996	235920.6644	SLOPE PVMNT REP - AP
24	644828.2122	235923.4227	SLOPE PVMNT REP - AP
25	644824.6649	235931.3783	END SLOPE PVMNT REP
26	644830.0273	235921.2058	END LANSCAPE REP
27	644825.3931	235931.3904	BEGIN LANSCAPE REP
28	644828.5109	235931.4422	END LANDSCAPE REP
29	644833.1981	235910.8640	BEGIN CURB, GUTTER & SIDEWALK REP
30	644832.7781	235931.5130	END CURB, GUTTER & SIDEWALK REP

LEGEND:

- DENOTES LIMITS OF EXISTING CHANNEL REMOVE AND REPLACE. SEE RECTANGULAR CHANNEL DETAILS ON SHEET D5 (26 LF THIS SHEET)
- DENOTES LIMITS OF EXISTING SLOPE PAVING REMOVE AND REPLACE (208 SQ FT THIS SHEET)
- DENOTES LIMITS OF EXISTING LANDSCAPING REMOVE AND REPLACE AS NEEDED FOR CONSTRUCTION (1,315 SQ FT THIS SHEET)
- DENOTES CURB, GUTTER AND SIDEWALK REMOVE AND REPLACE PER USDCCA STD DWG 216 & 234 (25 LF THIS SHEET)

NOTE:

1. PER SPECIFICATION 622, CONTRACTOR IS RESPONSIBLE TO PROVIDE ADEQUATE SURVEY OF EXISTING IMPROVEMENTS INCLUDING, BUT NOT LIMITED TO CONCRETE CHANNEL, PAVEMENT, MEDIAN, CURB, GUTTER AND SIDEWALK PRIOR TO REMOVAL TO ENSURE IMPROVEMENTS ARE REPLACED TO EXISTING LOCATION AT EXISTING OR BETTER CONDITION.

FAST
Call before you UnderGround
1-702-432-5300
FREEWAY AND ARTERIAL SYSTEM OF TRANSPORTATION

AVOID OVERHEAD POWER LINE CONTACT. IT'S COSTLY.
Call before you Overhead
1-702-227-2929
NV ENERGY ENVIRONMENT AND SAFETY SERVICES DEPARTMENT

Call before you Dig
AVOID CUTTING UNDERGROUND UTILITY LINES. IT'S COSTLY.
Call 811

HANSEN #29930

NO.	DATE	REVISION	BY	APVD

DSGN M. WARNICK | DR D. PUBLOW | CHK CH2M HILL | APVD J. GRIEST

DEPARTMENT OF PUBLIC WORKS
ENGINEERING DESIGN SECTION
CITY ENGINEER : DAVID N. BOWERS, P.E.
PROJECT MANAGER : GINA VENGLASS, P.E.
DURANGO HILLS RELIEF SEWER PROJECT

CITY OF LAS VEGAS NEVADA

CH2MHILL®
2485 VILLAGE VIEW DRIVE, SUITE 350, HENDERSON, NV 89074
PHONE 702-369-8175, CH2M HILL Project #240066

STORM DRAIN REPLACEMENT DETAILS

PROFESSIONAL ENGINEER - STATE OF NEVADA
JEFFREY N. GRIEST
EXP. 06/30/15
CIVIL
No. 17156
4-22-14

Sheet D3
25 of 35
DATE April 2014
DWG NO. 307V1045

FILE NAME: DHRS_LAYOUT_C3D_STORM DRAIN.DWG

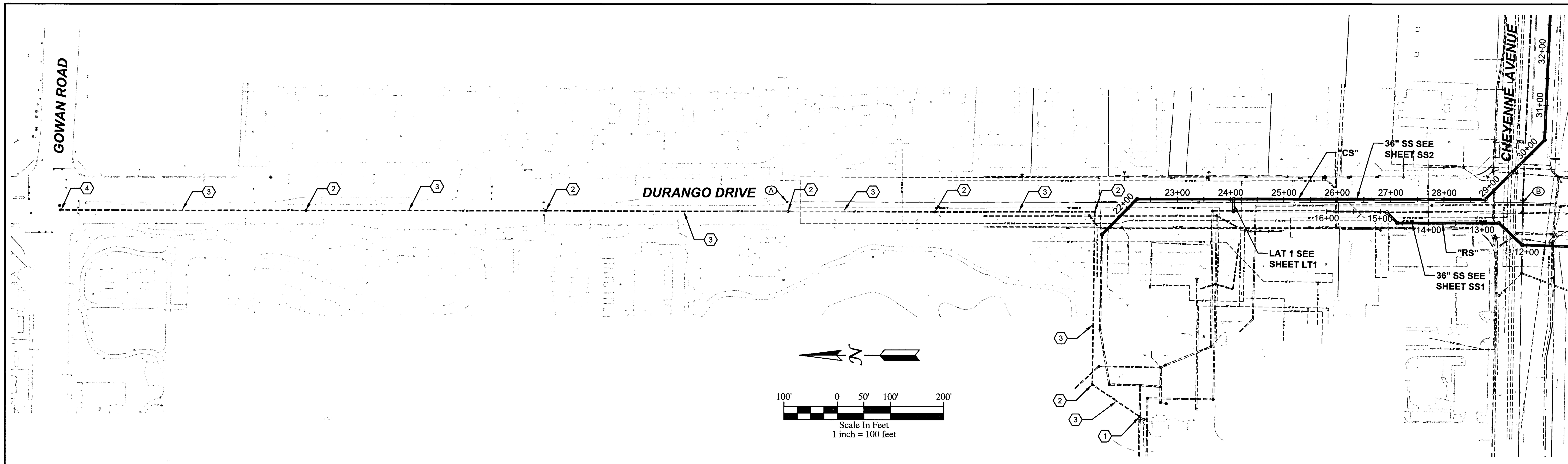

MISCELLANEOUS CONSTRUCTION NOTES:

1. MODIFY EXISTING MANHOLE PER ONSITE HIGH DROP MANHOLE DETAIL ON THIS SHEET
   N = 645601.94, E = 235592.15
2. EXISTING SSMH (PROTECT IN-PLACE DURING SS CONST. THEN TO BE ABANDONED ONCE RELIEF SEWER IS ACTIVE)
   N = 645691.73, E = 235650.78
   N = 645692.32, E = 235973.63
   N = 645991.78, E = 235968.86
   N = 646267.00, E = 235965.26
   N = 646721.11, E = 235958.84
   N = 647171.11, E = 235951.96
3. ABANDON 18" SS PER SPECIFICATION SECTION 630 (2,370 LF THIS SHEET)
4. CAP EXISTING 18" SS AT MANHOLE
   N = 647631.71, E = 235945.21

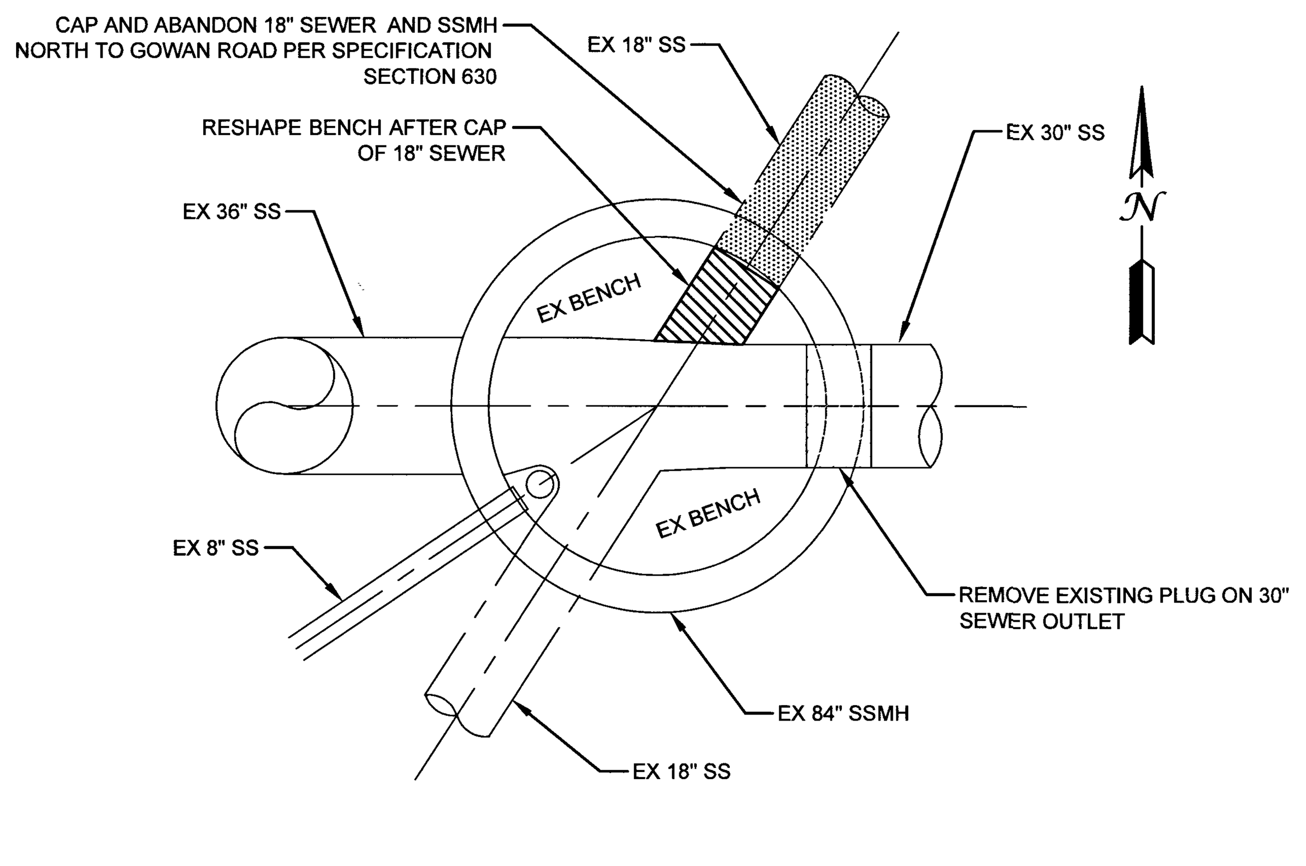

1 **ONSITE HIGH DROP MANHOLE MODIFICATION**
NOT TO SCALE

SURVEY MONUMENTS*				
CAP	NORTHING	EASTING	SHEET	LOCATION
(A)	646269.054	235982.787	D4	DURANGO
(B)	644890.462	236003.688	D4/SS1/SS3	DURANGO/CHEYENNE
(C)	644850.889	237356.533	SS4	SOARING GULLS/CHEYENNE
(D)	644822.546	238370.795	SS6	CHEYENNE
(E)	644813.051	238708.917	SS6	CHEYENNE
(F)	644793.793	239384.528	SS7	CHEYENNE
(G)	644784.194	239722.379	SS7	CHEYENNE
(H)	644774.532	240060.098	SS8	CIMARRON/CHEYENNE

*SEE CITY OF LAS VEGAS GENERAL NOTE #13 ON SHEET G3

NOTES:

1. CONTRACTOR SHALL VERIFY ALL HORIZONTAL AND VERTICAL LOCATIONS OF EXISTING FACILITIES BEING TIED INTO OR CROSSING PRIOR TO ANY WORK BEING DONE. CONTRACTOR SHALL COORDINATE ANY DISCREPANCIES WITH THE ENGINEER.
2. LINEAR FOOTAGE (LF) SLOPES AND INVERTS OF SANITARY SEWER PIPES AS SHOWN ON THE PLANS ARE CALCULATED HORIZONTALLY FROM CENTERLINE OF MANHOLE TO CENTERLINE OF MANHOLE.
3. REPLACE 3' OF PAVEMENT FROM OUTSIDE EDGE OF ABANDON MANHOLE. MILL 1" AND OVERLAY UTACS PERPENDICULAR TO LANE LINES. SEE D1 FOR PAVEMENT SECTION.

FAST Call before you UnderGround 1-702-432-5300
FREEWAY AND ARTERIAL SYSTEM OF TRANSPORTATION

AVOID OVERHEAD POWER LINE CONTACT. IT'S COSTLY.
Call before you Overhead 1-702-227-2929
NV ENERGY ENVIRONMENT AND SAFETY SERVICES DEPARTMENT

Call before you Dig
AVOID CUTTING UNDERGROUND UTILITY LINES. IT'S COSTLY.
Call 811

HANSEN #29930

DEPARTMENT OF PUBLIC WORKS
ENGINEERING DESIGN SECTION
CITY ENGINEER : DAVID N. BOWERS, P.E.
PROJECT MANAGER : GINA VENGLASS, P.E.

DURANGO HILLS RELIEF SEWER PROJECT

CITY OF LAS VEGAS NEVADA

NO.	DATE	REVISION	BY	APVD
DSGN M. WARNICK	DR D. PUBLOW	CHK CH2M HILL	APVD J. GRIEST	

CH2MHILL®
2485 VILLAGE VIEW DRIVE, SUITE 350, HENDERSON, NV 89074
PHONE 702-369-6175, CH2M HILL Project #240066

DURANGO SEWER ABANDONMENT DETAIL

PROFESSIONAL ENGINEER - STATE OF NEVADA
JEFFREY N. GRIEST
EXP. 06/30/15
CIVIL
No. 17156
4-22-14

Sheet D4
26 of 35
DATE April 2014
DWG NO. 307V1045

FILE NAME: DHRS_LAYOUT_C3D_GOWAN REMOVAL.DWG

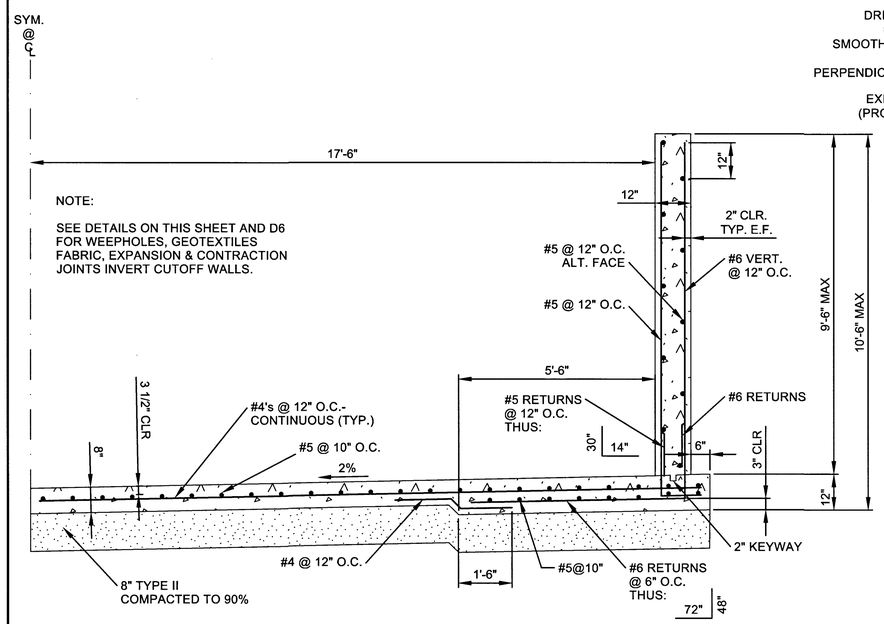

A RECTANGULAR CHANNEL HALF-DECTION ELEVATION CHANNEL MODIFICATIONS
1/2" = 1'-0"

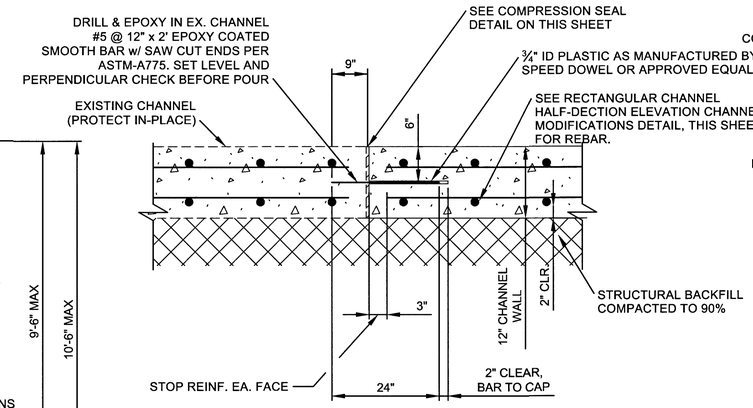

C TYPICAL CHANNEL WALL EXPANSION JOINT DETAIL
1" = 1'-0"

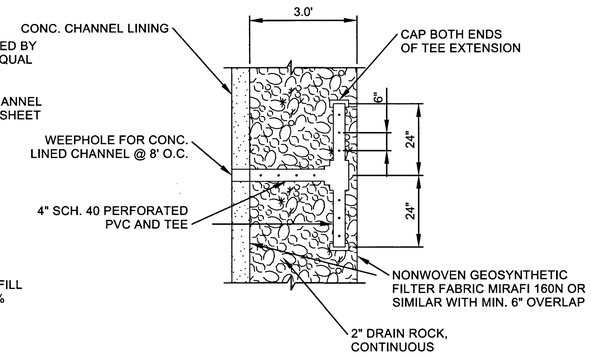

PLAN VIEW
CONCRETE RECTANGULAR CHANNEL WEEPHOLE

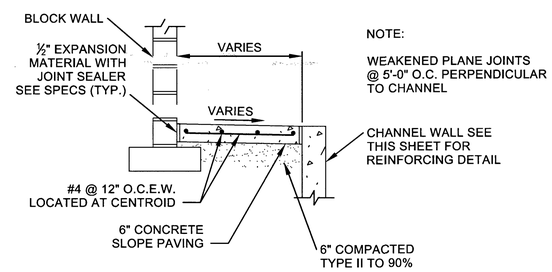

D RECTANGULAR CHANNEL EDGE DETAIL
1/2" = 1'-0"

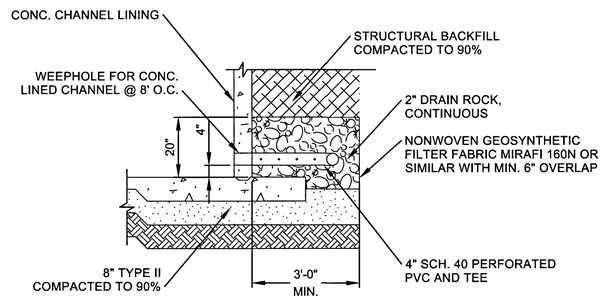

SECTIONAL ELEVATION
CONCRETE RECTANGULAR CHANNEL WEEPHOLE

F CONRETE CHANNEL WEEPHOLE
1/2" = 1'-0"

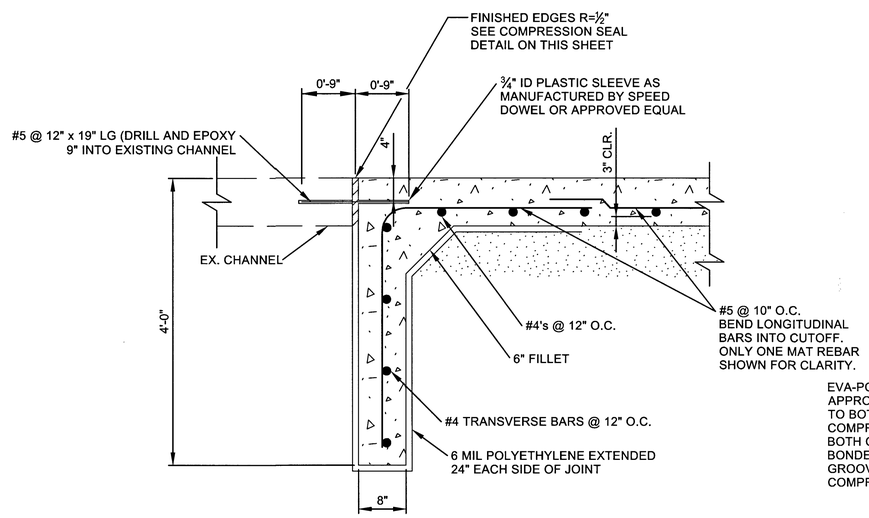

B JOINING TO EXISTING CHANNEL INVERT CUTOFF WALL WITH EXPANSION JOINT DETAIL
1/2" = 1'-0"

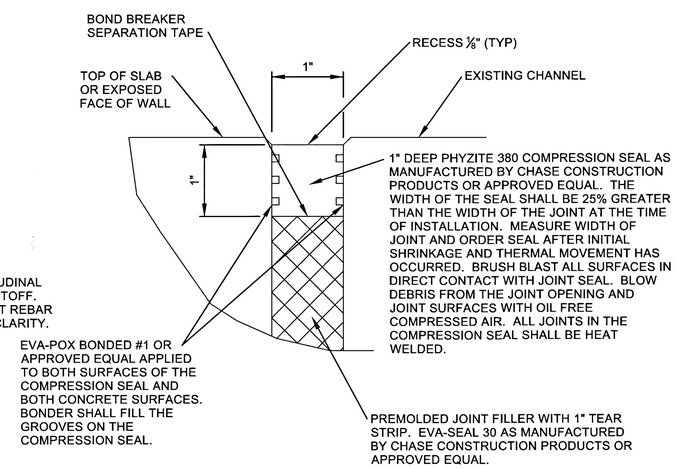

E COMPRESSION SEAL DETAIL
NOT TO SCALE

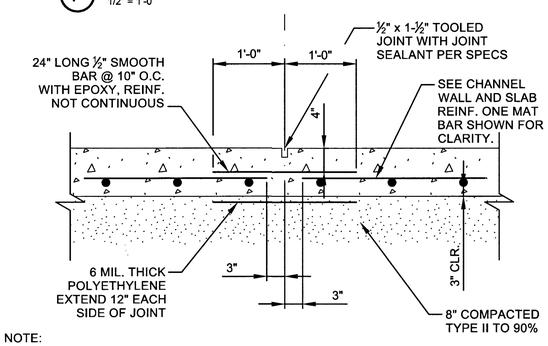

NOTE:
CONTRACTION JOINT SHALL BE PLACED AT MIDDLE SPAN BETWEEN EXPANSION JOINTS.

G TYPICAL INVERT CONTRACTION JOINT DETAIL
1" = 1'-0"

FAST
Call before you UnderGround
1-702-432-5300
FREEWAY AND ARTERIAL SYSTEM OF TRANSPORTATION
AVOID OVERHEAD POWER LINE CONTACT. IT'S COSTLY.
Call before you Overhead
1-702-227-2929
NV ENERGY ENVIRONMENT AND SAFETY SERVICES DEPARTMENT
Call before you Dig
AVOID CUTTING UNDERGROUND UTILITY LINES. IT'S COSTLY.
Call 811

HANSEN #29930

NO.	DATE	REVISION	BY	APVD
DSGN	DR	CHK	APVD	

DEPARTMENT OF PUBLIC WORKS
ENGINEERING DESIGN SECTION
CITY ENGINEER: DAVID N. BOWERS, P.E.
PROJECT MANAGER: GINA VENGLASS, P.E.
DURANGO HILLS RELIEF SEWER PROJECT

CITY OF LAS VEGAS NEVADA

CH2MHILL®
2485 VILLAGE VIEW DRIVE, SUITE 350, HENDERSON, NV 89074
PHONE 702-369-6175, CH2M HILL Project #240069

STRUCTURAL CHANNEL DETAILS

PROFESSIONAL ENGINEER - STATE OF NEVADA
LIAO YUANG
Exp. 06/30/2014
4-19-2014
CIVIL
No. 021401

Sheet D5
27 of 35
DATE April 2014
DWG NO. 307V1045

FILE NAME: DHRS_LAYOUT_C3D_STORM DRAIN.DWG

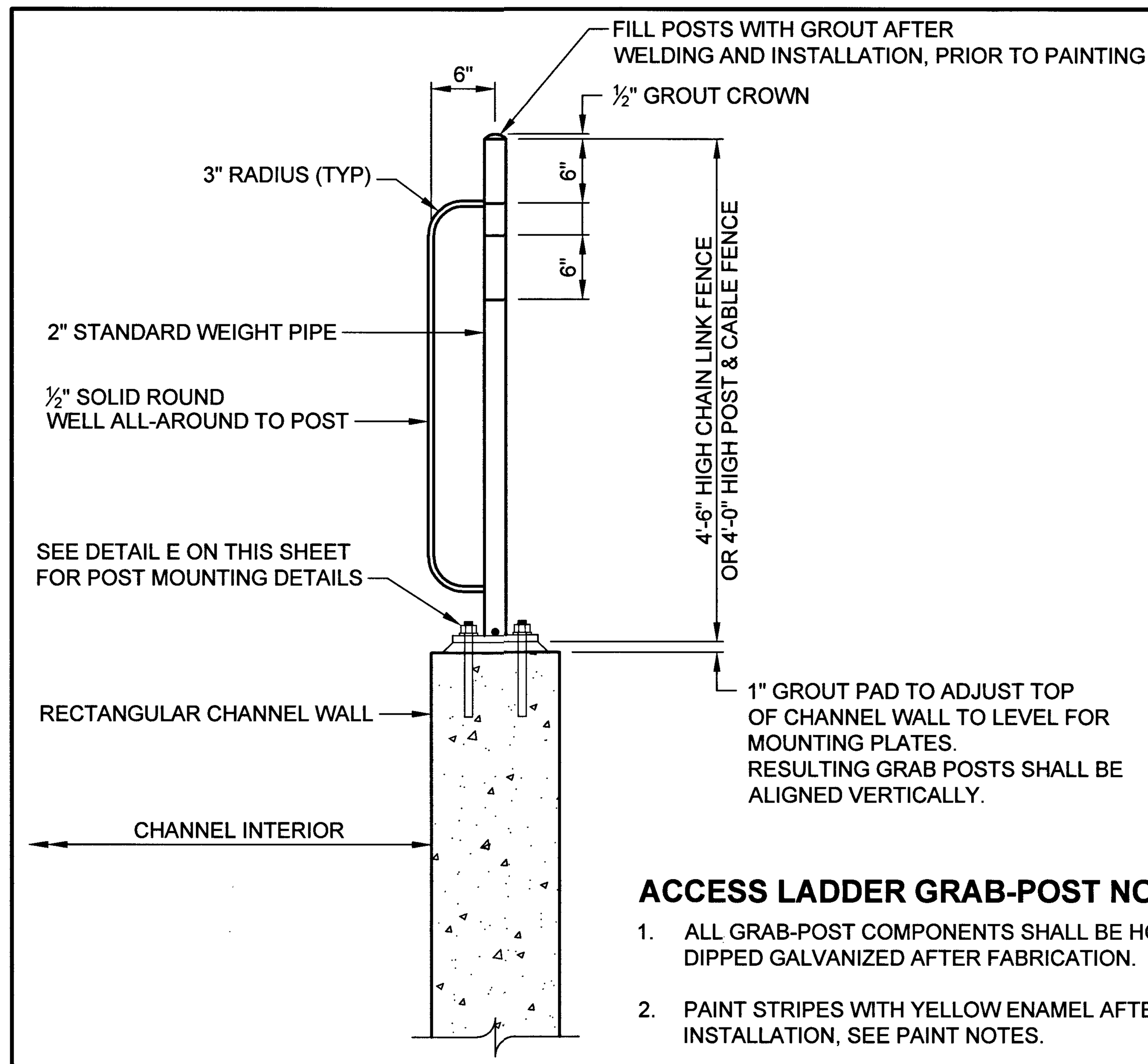

ACCESS LADDER GRAB-POST NOTES

1. ALL GRAB-POST COMPONENTS SHALL BE HOT DIPPED GALVANIZED AFTER FABRICATION.
2. PAINT STRIPES WITH YELLOW ENAMEL AFTER INSTALLATION, SEE PAINT NOTES.
3. GRAB-POSTS SHALL BE INSTALLED AT ALL ACCESS LADDER LOCATIONS.

(A) TYPICAL ACCESS LADDER GRAB-POST
NOT TO SCALE

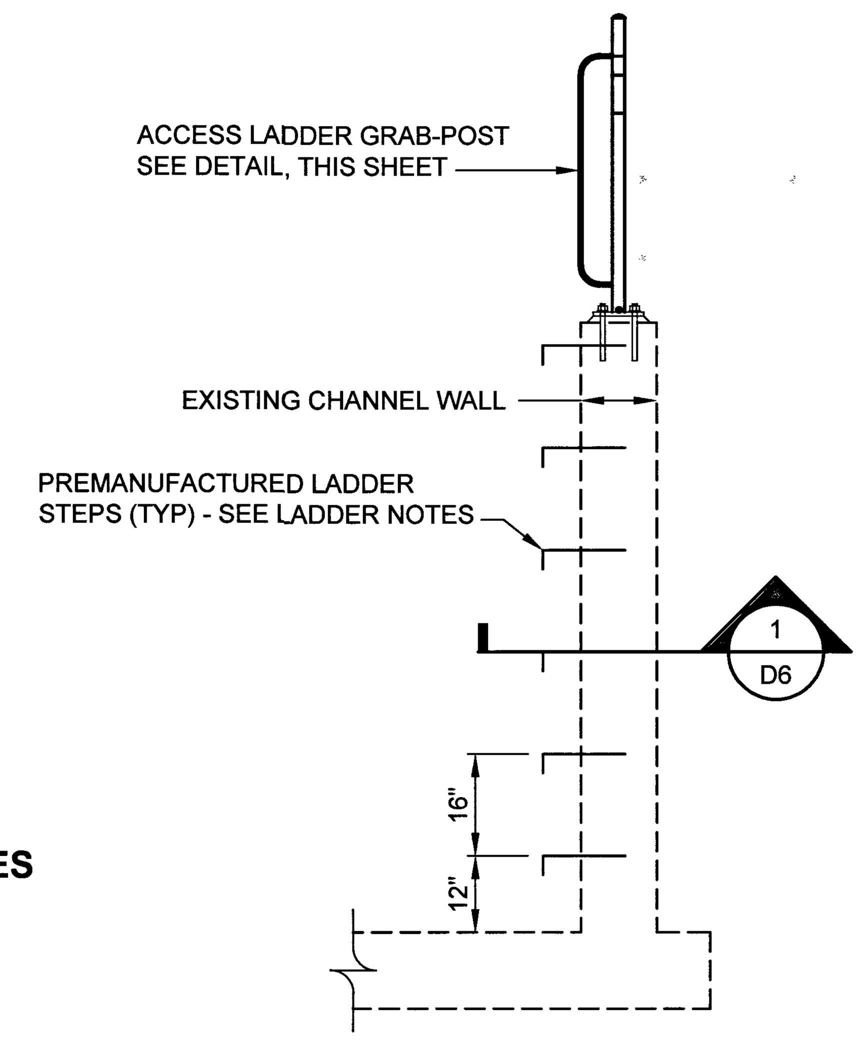

(B) RECTANGULAR CHANNEL LADDER
OPTION 1 - DRILL & EPOXY

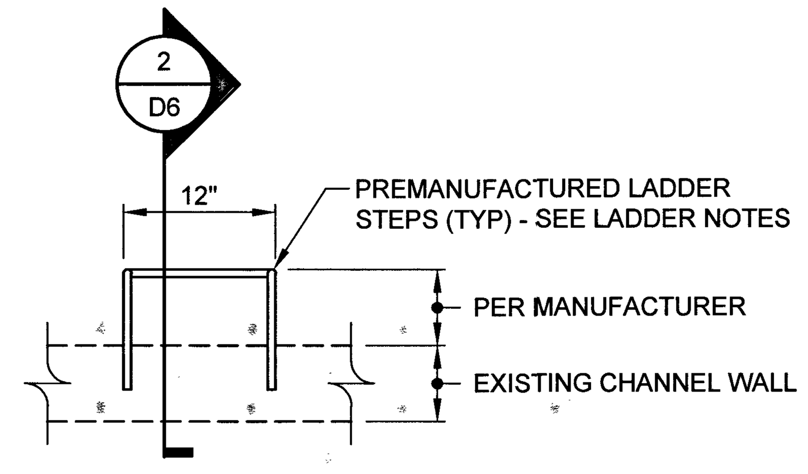

(1) STEP PLAN
NOT TO SCALE

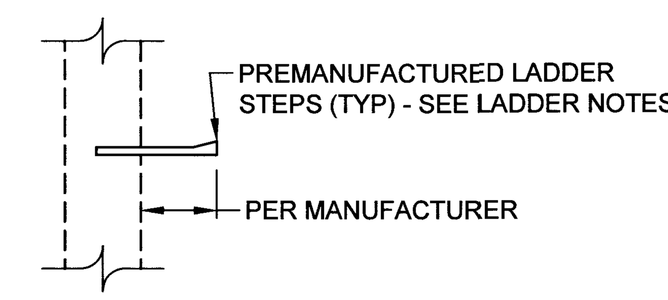

(2) STEP SECTION
NOT TO SCALE

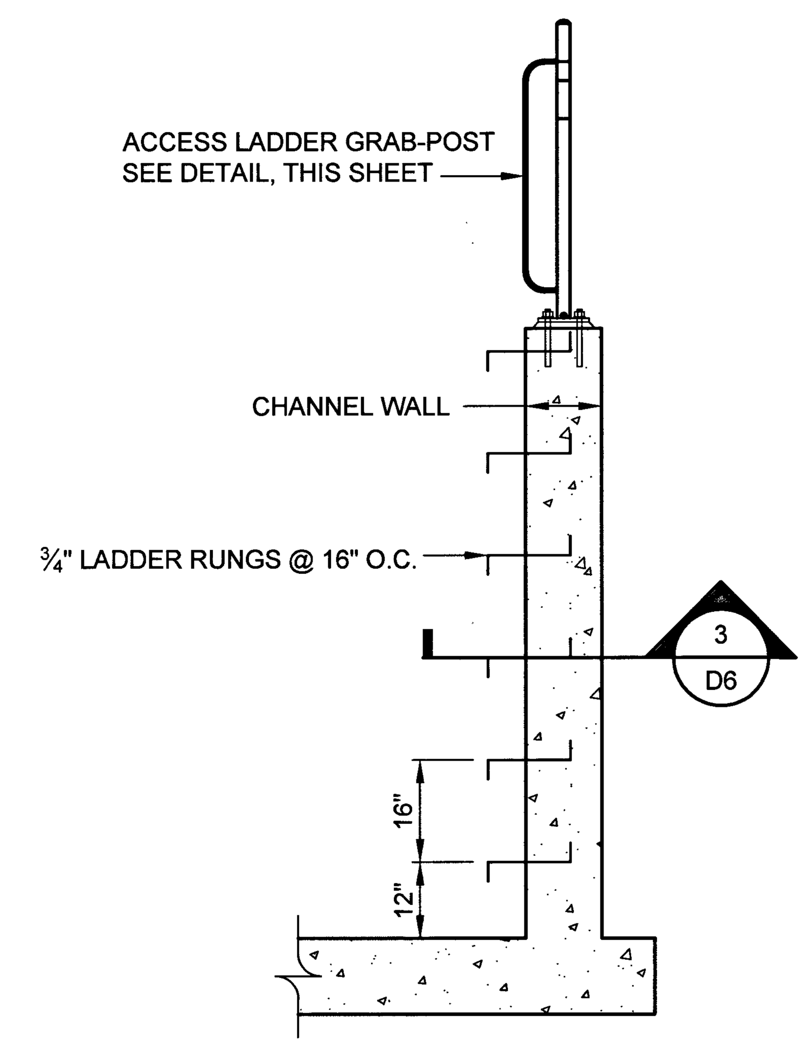

(C) RECTANGULAR CHANNEL LADDER
OPTION 2 - CAST IN PLACE

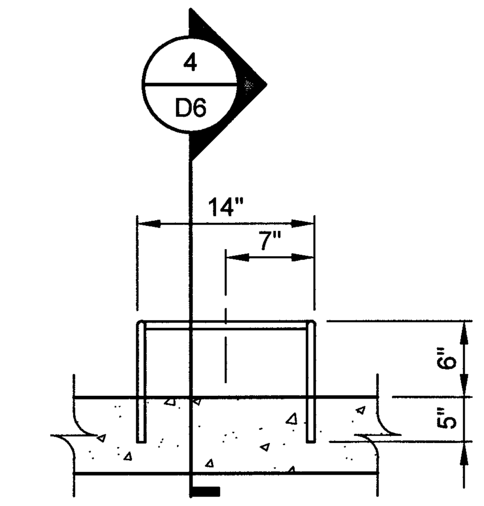

(3) STEP PLAN
NOT TO SCALE

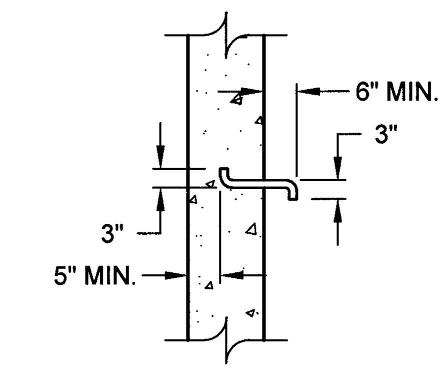

(4) STEP SECTION
NOT TO SCALE

CHANNEL LADDER SCHEDULE		
LOCATION OF ACCESS LADDERS		
NORTHING	EASTING	STREET
644786.2807	235912.9222	CHEYENNE/ RAMPART
644820.4962	235931.4494	CHEYENNE/ RAMPART

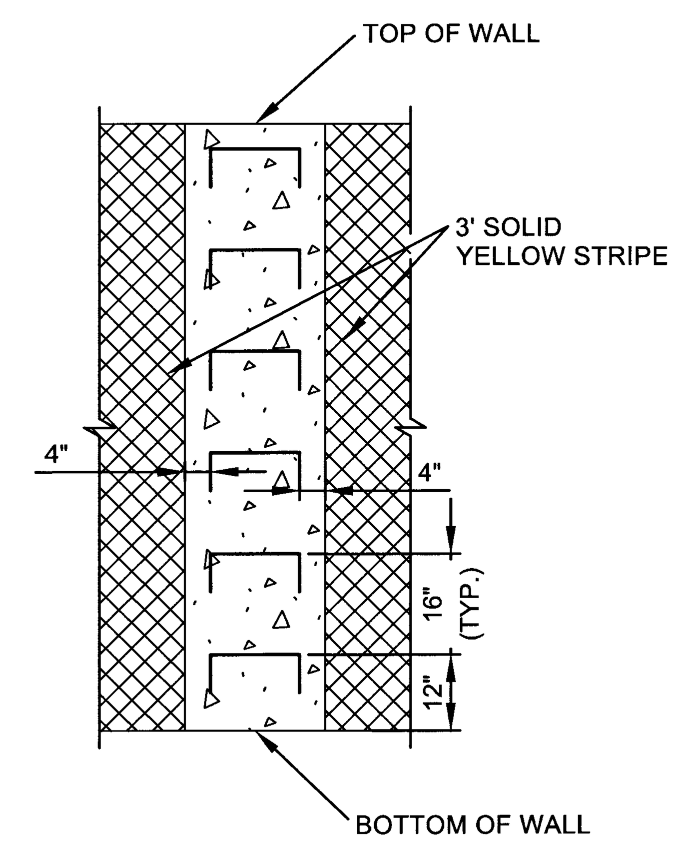

PAINT NOTES

1. ALL PAINTS SHALL BE HIGH-GLOSS EMNAMEL AND FEDERAL CHIP COLOR "SAFETY YELLOW".
2. CONTRACTOR SHALL SUBMIT PAINT DATA SHEET FOR REVIEW AND APPROVAL PRIOR TO APPLICATION.
3. PAINTING SHALL CONFORM TO SECTION 614 OF THE "UNIFORM STANDARD SPECIFICATIONS FOR PUBLIC WORKS' CONSTRUCTION OFF-SITE IMPROVEMENTS, CLARK COUNTY AREA, NEVADA" (LATEST EDITION).

PREMANUFACTURED LADDER NOTES

1. LADDER STEPS SHALL BE "NEENAH R-1982-F" OR APPROVED EQUIVALENT.
2. LADDER STEPS SHALL BE UV RESISTANT (NO POLYPROPYLENE ALLOWED).
3. COMPONENTS SHALL BE DESIGNED SPECIFICALLY FOR INSTALLATION INTO EXISTING CONCRETE STRUCTURES TO RESIST PULLOUT FORCES OF A MINIMUM OF 1,500 POUNDS.
4. CONTRACTOR SHALL SUBMIT MANUFACTURER DATA SHEET FOR REVIEW AND APPROVAL. ONCE APPROVAL IS OBTAINED, THE STEPS SHALL BE INSTALLED IN STRICT ACCORDANCE WITH THE MANUFACTURERS RECOMMENDATIONS.
5. PULLOUT TESTS MAY BE PERFORMED AFTER INSTALLATION AT THE OWNER'S AND/OR ENGINEER'S DISCRETION.

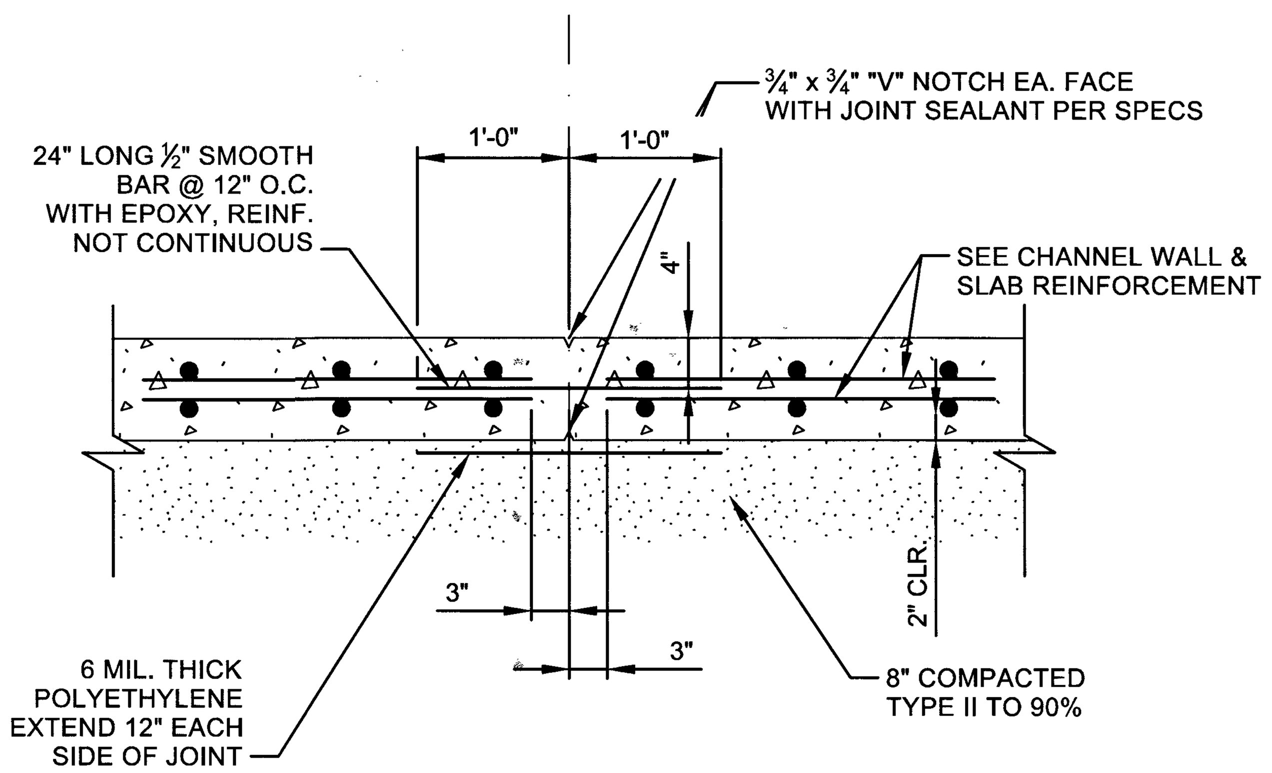

NOTE:

CONTRACTION JOINT SHALL BE PLACED AT MIDDLE SPAN BETWEEN EXPANSION JOINT.

(D) TYPICAL WALL CONTRACTION JOINT DETAIL
1" = 1'-0"

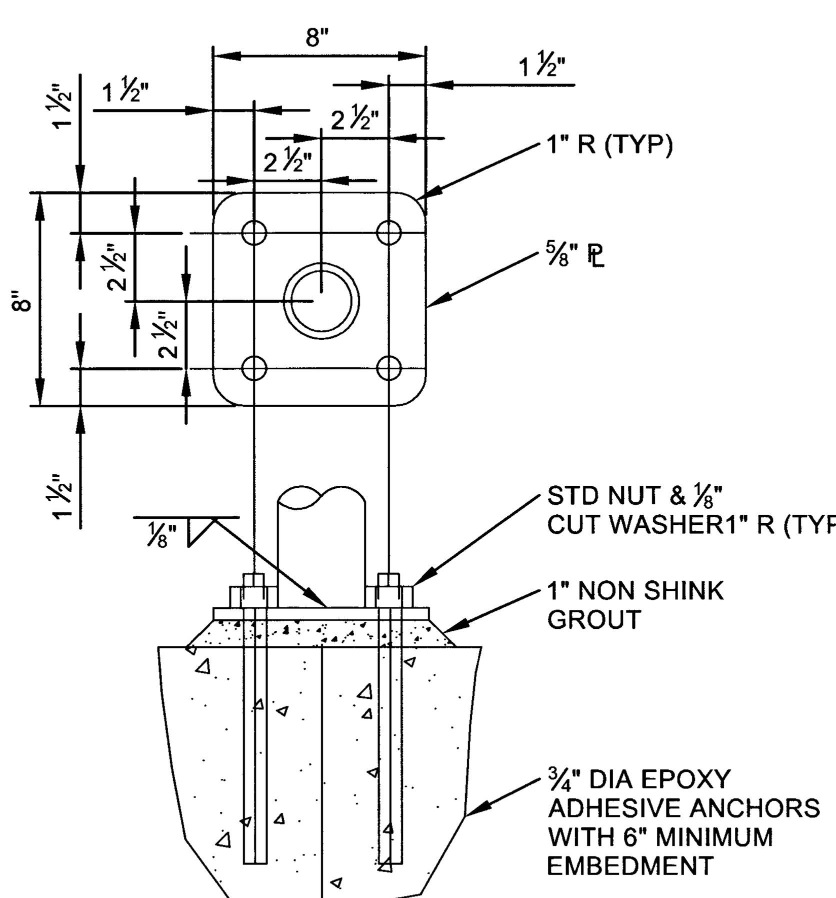

NOTE:

ALL METAL PARTS SHALL BE GALVANIZED.

(E) POST MOUNTING DETAIL
NOT TO SCALE

FAST Call before you UnderGround 1-702-432-5300
FREEWAY AND ARTERIAL SYSTEM OF TRANSPORTATION

AVOID OVERHEAD POWER LINE CONTACT. IT'S COSTLY.
Call before you Overhead 1-702-227-2929
NV ENERGY ENVIRONMENT AND SAFETY SERVICES DEPARTMENT

Call before you Dig
AVOID CUTTING UNDERGROUND UTILITY LINES. IT'S COSTLY.
Call 811

HANSEN #29930

NO.	DATE	REVISION	DR	CHK	APVD	BY	APVD
DSGN							

DEPARTMENT OF PUBLIC WORKS
ENGINEERING DESIGN SECTION
CITY ENGINEER : DAVID N. BOWERS, P.E.
PROJECT MANAGER : GINA VENGLASS, P.E.

DURANGO HILLS RELIEF SEWER PROJECT

CITY OF LAS VEGAS NEVADA

CH2MHILL
2485 VILLAGE VIEW DRIVE, SUITE 350, HENDERSON, NV 89074
PHONE 702-369-6175, CH2M HILL Project #240066

STRUCTURAL CHANNEL DETAILS

PROFESSIONAL ENGINEER - STATE OF NEVADA
LIAO YANG
Exp. 06/30/2014
4-17-2014
CIVIL
No. 021401

Sheet D6
28 of 35
DATE April 2014
DWG NO. 307V1045

FILE NAME: DHRS_LAYOUT_C3D_STORM DRAIN.DWG

TABLE 1

REQUIRED NON-STRUCTURAL SPECIAL INSPECTION

REFER TO SPECIFICATION SECTION 105

SYSTEM OR MATERIAL	2009 IBC CODE REFERENCE	REFERENCED STANDARD	PERIODIC OWNER FURNISHED SPECIAL INSPECTION (SEE NOTE 1)	CONTINUOUS OWNER FURNISHED SPECIAL INSPECTION	REQUIRED REPORTING BY SPECIAL INSPECTOR TO DESIGNATED DISTRIBUTION LIST	COMMENTS	TESTING FOR SPECIAL INSPECTION
GEOTECHNICAL							
1. SOILS:							
A. VERIFY MATERIALS BELOW FOOTINGS ARE ADEQUATE TO ACHIEVE THE DESIGN BEARING CAPACITY	1704.7, 1803.5, 1803.6	SECTION 203, EXCAVATION AND EMBANKMENT	X		X	PROFESSIONAL OBSERVATION BY GEOTECHNICAL ENGINEER'S QUALIFIED DESIGNEE	
B. VERIFY EXCAVATIONS ARE EXTENDED TO PROPER DEPTH AND HAVE REACHED PROPER MATERIAL	1704.7	SECTION 203, EXCAVATION AND EMBANKMENT	X		X	PROFESSIONAL OBSERVATION BY GEOTECHNICAL ENGINEER'S QUALIFIED DESIGNEE	
D.VERIFY USE OF PROPER MATERIALS, DENSITIES, AND LIFT THICKNESSES DURING PLACEMENT AND COMPACTION OF COMPACTED FILL	1704.7	SECTION 208, TRENCH EXCAVATION AND BACKFILL			X		SEE TABLE 3 FOR DENSITY TEST AND PROOF ROLLING REQUIREMENTS
E. PRIOR TO PLACEMENT OF COMPACTED FILL, OBSERVE SUBGRADE AND VERIFY THAT SITE HAS BEEN PREPARED PROPERLY	1704.7	SECTION 203, EXCAVATION AND EMBANKMENT	X		X	PROFESSIONAL OBSERVATION BY GEOTECHNICAL ENGINEER'S QUALIFIED DESIGNEE	SEE TABLE 3 FOR DENSITY TEST AND PROOF ROLLING REQUIREMENTS
STRUCTURAL: SEE TABLE 2							

NOTES:
PERIODIC INSPECTION IS DEFINED AS INSPECTION BY THE SPECIAL INSPECTOR OF ALL MATERIALS AND SYSTEMS, IN SOME CASES PERFORMED DURING THEIR PLACEMENT AND IN ALL CASES PERFORMED UPON COMPLETION OF THEIR PLACEMENT. THE COMPLETION INSPECTION SHALL BE PERFORMED SO THAT WORK CAN BE CORRECTED PRIOR TO OTHER RELATED WORK PROCEEDING.

DESIGN CRITERIA

1. APPLICABLE CODE: 2009 INTERNATIONAL BUILDING CODE (IBC) AND ASCE 7-05, AS AMENDED BY THE CITY OF LAS VEGAS.
2. SOIL DESIGN PARAMETERS:
   - A. NET ALLOWABLE SOIL BEARING PRESSURES (PSF): 2500 PSF
   - B. EQUIVALENT DRAINED FLUID PRESSURES:
     - ACTIVE: 38 PCF
     - AT REST: 61 PCF
     - PASSIVE: 320 PCF
     - BUT NOT TO EXCEED 4000 PSF
   - C. VERTICAL SURCHARGE: 2 FT OF SOIL WEIGHT MINIMUM
   - D. COEFFICIENT OF FRICTION: 0.45
   - E. NATIVE SOIL UNIT WEIGHT 135 PCF
   - F. DESIGN GROUND WATER (GW) ELEVATION NONE ENCOUNTERED

FORMWORK, SHORING AND BRACING

1. STRUCTURES SHOWN ON THE DRAWINGS HAVE BEEN DESIGNED FOR STABILITY UNDER FINAL CONDITIONS ONLY. DESIGN SHOWN DOES NOT INCLUDE NECESSARY COMPONENTS OR EQUIPMENT FOR STABILITY OF THE STRUCTURES DURING CONSTRUCTION. CONTRACTOR IS RESPONSIBLE FOR WORK RELATING TO CONSTRUCTION ERECTION METHODS, BRACING, SHORING, RIGGING, GUYS, SCAFFOLDING, FORMWORK, AND OTHER WORK AIDS REQUIRED TO SAFELY PERFORM THE WORK SHOWN.

CONCRETE REINFORCING

1. REINFORCING STEEL: ASTM A615, GRADE 60
   WELDED: ASTM A706, GRADE 60 (WELDING IS ONLY PERMITTED WITH WRITTEN PERMISSION FROM ENGINEER)
2. FABRICATION AND PLACEMENT OF REINFORCING STEEL SHALL BE IN ACCORDANCE WITH CRSI MSP-1 "MANUAL OF STANDARD PRACTICE" AND ACI 301 "SPECIFICATIONS FOR STRUCTURAL CONCRETE".

CAST IN PLACE CONCRETE

1. 28-DAY COMPRESSIVE STRENGTHS:
   STRUCTURAL: 4500 PSI
2. CEMENT: PORTLAND CEMENT ASTM C150/C150M TYPE V.

STATEMENT OF SPECIAL INSPECTIONS

GENERAL NOTES

1. THE STATEMENT OF SPECIAL INSPECTIONS DRAWINGS PROVIDE PROJECT COMPLIANCE WITH THE PROVISIONS OF THE 2009 INTERNATIONAL BUILDING CODE (IBC) CHAPTER 17 FOR SPECIAL INSPECTION, STRUCTURAL OBSERVATION, AND TESTING FOR WIND AND SEISMIC RESISTANCE AS APPLICABLE. EXCEPT WHERE OTHERWISE NOTED, THIS INSPECTION IS OWNER FURNISHED.
2. STANDARD SPECIAL INSPECTION REQUIREMENTS FOR NONSTRUCTURAL COMPONENTS ARE CONTAINED IN TABLE 1.

GEOTECHNICAL OBSERVATION

1. ALL FOUNDATION BEARING SURFACES SHALL BE INSPECTED UNDER THE SUPERVISION OF A REGISTERED GEOTECHNICAL ENGINEER PRIOR TO PLACEMENT OF REINFORCING STEEL.
2. ADDITIONAL GEOTECHNICAL SPECIAL INSPECTION REQUIREMENTS ARE LISTED IN TABLE 1.
3. GEOTECHNICAL TESTING REQUIREMENTS ARE LISTED IN TABLE 3.

TABLE 2

REQUIRED STRUCTURAL SPECIAL INSPECTION

REFER TO SPECIFICATION SECTION 105

SYSTEM	2009 IBC CODE REFERENCE	REFERENCED STANDARD	PERIODIC OWNER FURNISHED SPECIAL INSPECTION (SEE NOTE 1)	CONTINUOUS OWNER FURNISHED SPECIAL INSPECTION	REQUIRED REPORTING BY SPECIAL INSPECTOR TO DESIGNATED DISTRIBUTION LIST	COMMENTS	TESTING FOR SPECIAL INSPECTION
CONCRETE							
1. INSPECTION OF REINFORCING STEEL AND PLACEMENT	1704.4, 1903.1, 1907.1, 1907.7, 1913.4	ACI 318: 3.5, 7.1-7.7	X		X		
4. INSPECTION OF ANCHORS INSTALLED IN HARDENED CONCRETE.	1912.1	ACI 318: 3.8.6, 8.1.3, 21.2.8	X		X		
5. VERIFY USE OF REQUIRED DESIGN MIX	1704.4, 1904.2.2, 1905.2-1905.4, 1913.2, 1913.3	ACI 318: Ch. 4, 5.2-5.4	X		X		
6. AT THE TIME FRESH CONCRETE IS SAMPLED TO FABRICATE SPECIMENS FOR STRENGTH TESTS, PERFORM SLUMP AND AIR CONTENT TESTS, AND DETERMINE THE TEMPERATURE OF THE CONCRETE	1704.4, 1905.6, 1913.10	ASTM C 172, ASTM C 31, ACI 318: 5.6, 5.8		X	X		SEE TABLE 3 FOR CONCRETE TEST REQUIREMENTS
7. INSPECTION OF CONCRETE PLACEMENT FOR PROPER APPLICATION TECHNIQUES	1704.4, 1905.9, 1905.10, 1913.6, 1913.7, 1913.8	ACI 318: 5.9, 5.10		X	X		
8. INSPECTION FOR MAINTENANCE OF SPECIFIED CURING TEMPERATURE AND TECHNIQUES	1704.4, 1905.11-1905.13, 1913.9	ACI 318: 5.11-5.13	X		X		
9. INSPECT FORMWORK FOR SHAPE, LOCATION AND DIMENSIONS OF THE CONCRETE MEMBER BEING FORMED	1704.4, 1906.1	ACI 318: 6.1.1	X		X		

NOTES:
PERIODIC INSPECTION IS DEFINED AS INSPECTION BY THE SPECIAL INSPECTOR OF ALL MATERIALS AND SYSTEMS, IN SOME CASES PERFORMED DURING THEIR PLACEMENT AND IN ALL CASES PERFORMED UPON COMPLETION OF THEIR PLACEMENT. THE COMPLETION INSPECTION SHALL BE PERFORMED SO THAT WORK CAN BE CORRECTED PRIOR TO OTHER RELATED WORK PROCEEDING.

TABLE 3

TESTING FOR REQUIRED SPECIAL INSPECTION

REFER TO SPECIFICATION SECTION 105

MATERIAL	TYPE OR SCOPE	STANDARD	2009 IBC CODE REFERENCE	FREQUENCY	BY WHOM	REQUIRED REPORTING TO DESIGNATED DISTRIBUTION LIST	COMMENTS
GEOTECHNICAL							
CONTROLLED FILL	GRADATION	AASHTO T310	1704.7	SECTION 208, TRENCH EXCAVATION AND BACKFILL	OWNER'S APPROVED TESTING AGENCY	X	
CONTROLLED FILL	DENSITY	AASHTO T310	1704.7	SECTION 208, TRENCH EXCAVATION AND BACKFILL	OWNER'S APPROVED TESTING AGENCY	X	
PREPARED SUBGRADE	DENSITY	AASHTO T310, AASHTO T180	1704.7	SECTION 208, TRENCH EXCAVATION	OWNER'S APPROVED TESTING AGENCY	X	
EXPOSED SUBGRADE	PROOF ROLLING	NOT APPLICABLE	1704.7	SECTION 208, TRENCH EXCAVATION AND BACKFILL	GEOTECHNICAL ENGINEER	X	
CONCRETE							
CONCRETE	STRENGTH	ASTM C39	1704.4, 1905.6	ONCE EACH DAY, BUT NOT LESS THAN ONE SAMPLE FOR EACH 150 CUBIC YARDS OR 5,000 SFT OF WALLS OR SLABS PLACED	OWNER'S TESTING AGENCY	X	
CONCRETE	SLUMP	ASTM C143	1704.4	ONE SAMPLE PER STRENGTH TEST	OWNER'S TESTING AGENCY	X	
CONCRETE	AIR CONTENT	ASTM C173	1704.4	ONE SAMPLE PER STRENGTH TEST	OWNER'S TESTING AGENCY	X	
CONCRETE	TEMPERATURE	ASTM C1064	1704.4	ONE SAMPLE PER STRENGTH TEST	OWNER'S TESTING AGENCY	X	

SPECIAL INSPECTION AND RELATED TESTING

1. SPECIAL INSPECTION DOES NOT INCLUDE OR WAIVE THE RESPONSIBILITY FOR ANY REQUIRED INSPECTIONS BY THE CITY OF LAS VEGAS OR ENGINEER. THE CONTRACTOR SHALL SCHEDULE BOTH INSPECTIONS.
2. SPECIFIED CONCRETE AND OTHER MATERIAL TESTING DURING CONSTRUCTION WILL BE OWNER FURNISHED. SPECIFIED LABORATORY TEST MIXES AND SIMILAR TEST RESULTS TO VERIFY MATERIAL QUALITY AND CONFORMANCE TO SPECIFICATIONS, AND SUBMITTED FOR REVIEW PRIOR TO ACCEPTANCE FOR USE ON THE PROJECT, SHALL BE THE RESPONSIBILITY OF THE CONTRACTOR.
3. SPECIAL INSPECTION, TESTING AND OBSERVATION (OWNER FURNISHED) IS REQUIRED IN ACCORDANCE WITH IBC SECTIONS 110 AND 1704 AS INDICATED IN THE STATEMENT OF SPECIAL INSPECTION.

FAST Call before you UnderGround 1-702-432-5300 FREEWAY AND ARTERIAL SYSTEM OF TRANSPORTATION
AVOID OVERHEAD POWER LINE CONTACT. IT'S COSTLY. Call before you Overhead 1-702-227-2929 NV ENERGY ENVIRONMENT AND SAFETY SERVICES DEPARTMENT
Call before you Dig AVOID CUTTING UNDERGROUND UTILITY LINES. IT'S COSTLY. Call 811

HANSEN #29930

NO.	DATE	REVISION	BY	APVD
DSGN	DR	CHK	APVD	

DEPARTMENT OF PUBLIC WORKS
ENGINEERING DESIGN SECTION
CITY ENGINEER: DAVID N. BOWERS, P.E.
PROJECT MANAGER: GINA VENGLASS, P.E.
DURANGO HILLS RELIEF SEWER PROJECT

CH2MHILL®
2485 VILLAGE VIEW DRIVE, SUITE 350, HENDERSON, NV 89074
PHONE 702-369-4175, CH2M HILL Project #240066

STRUCTURAL CHANNEL DETAILS

PROFESSIONAL ENGINEER – STATE OF NEVADA
LIAO YANG
Exp. 06/30/2014
CIVIL
No. 021401

Sheet D7
29 of 35
DATE April 2014
DWG NO. 307V1045

FILE NAME: DHRS_LAYOUT_C3D_STORM DRAIN.DWG

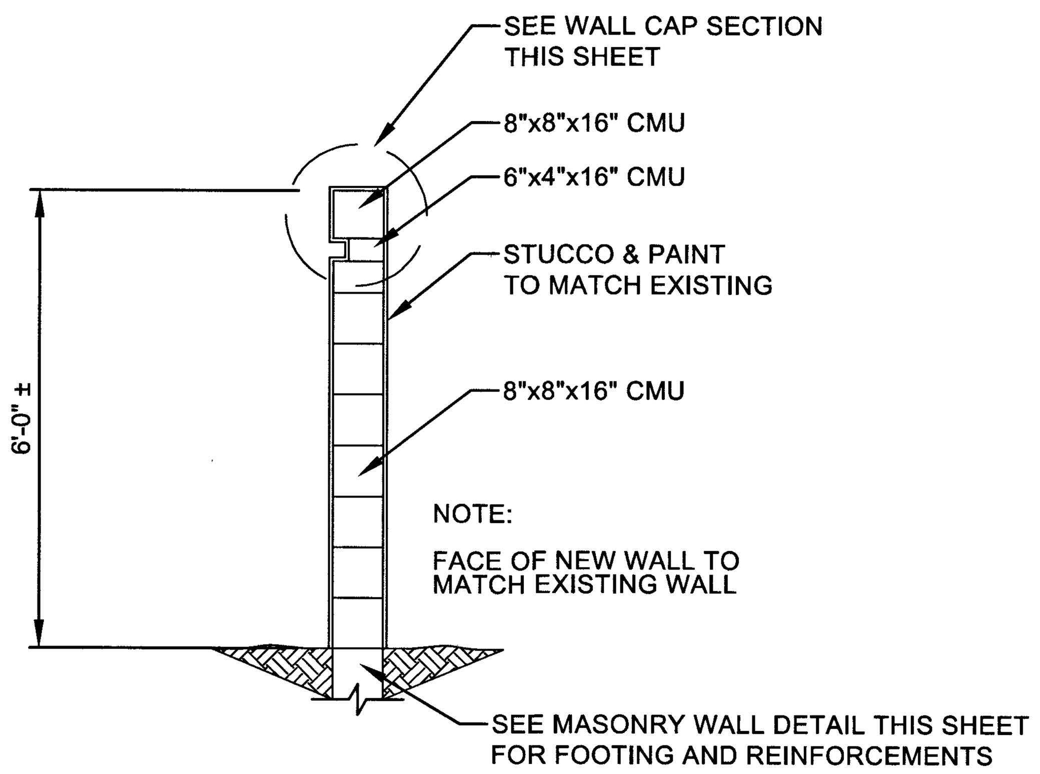

(A) WALL SECTION
NOT TO SCALE

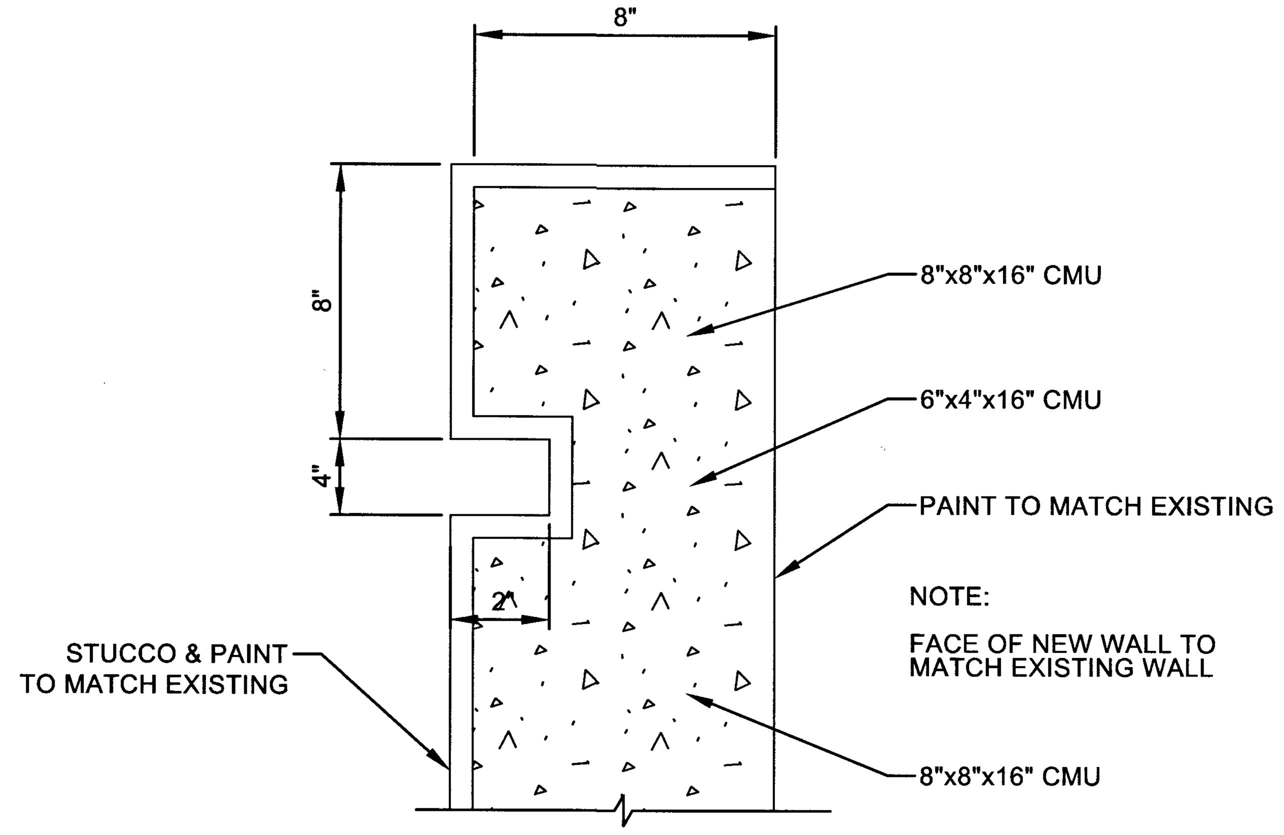

(B) WALL CAP SECTION
NOT TO SCALE

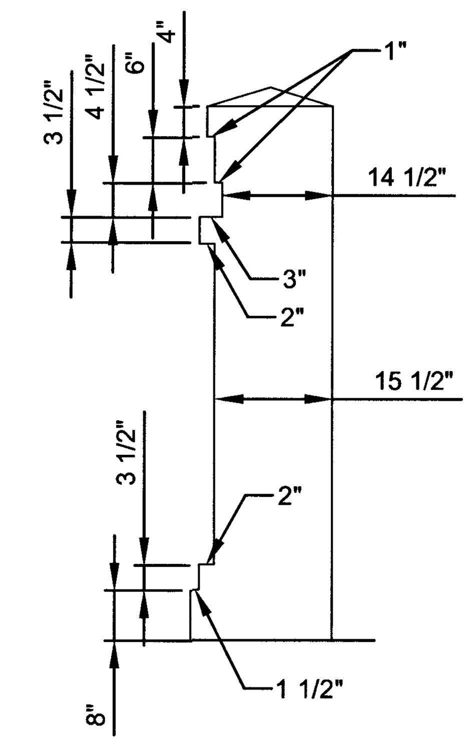

(C) COLUMN SECTION
NOT TO SCALE

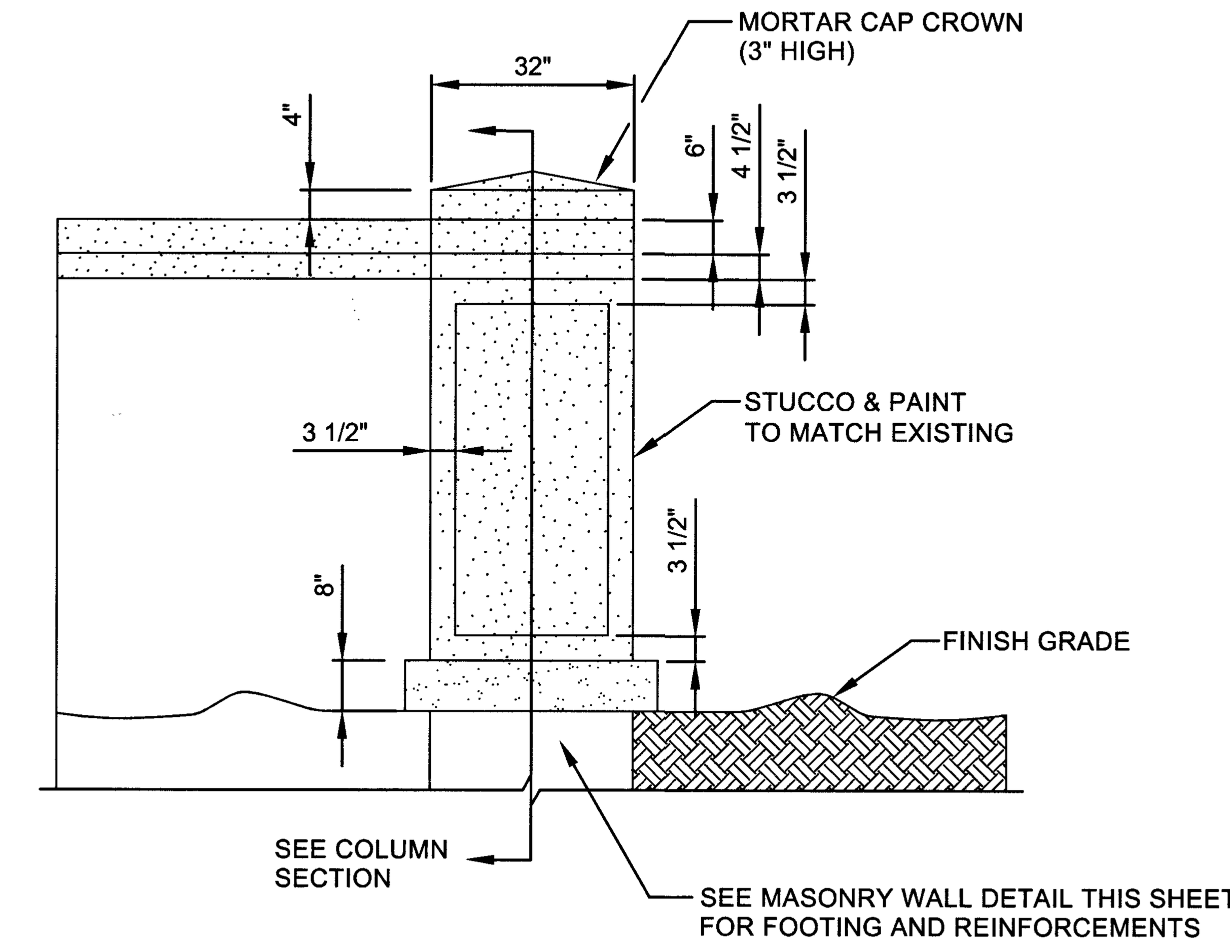

(D) COLUMN ELEVATION
NOT TO SCALE

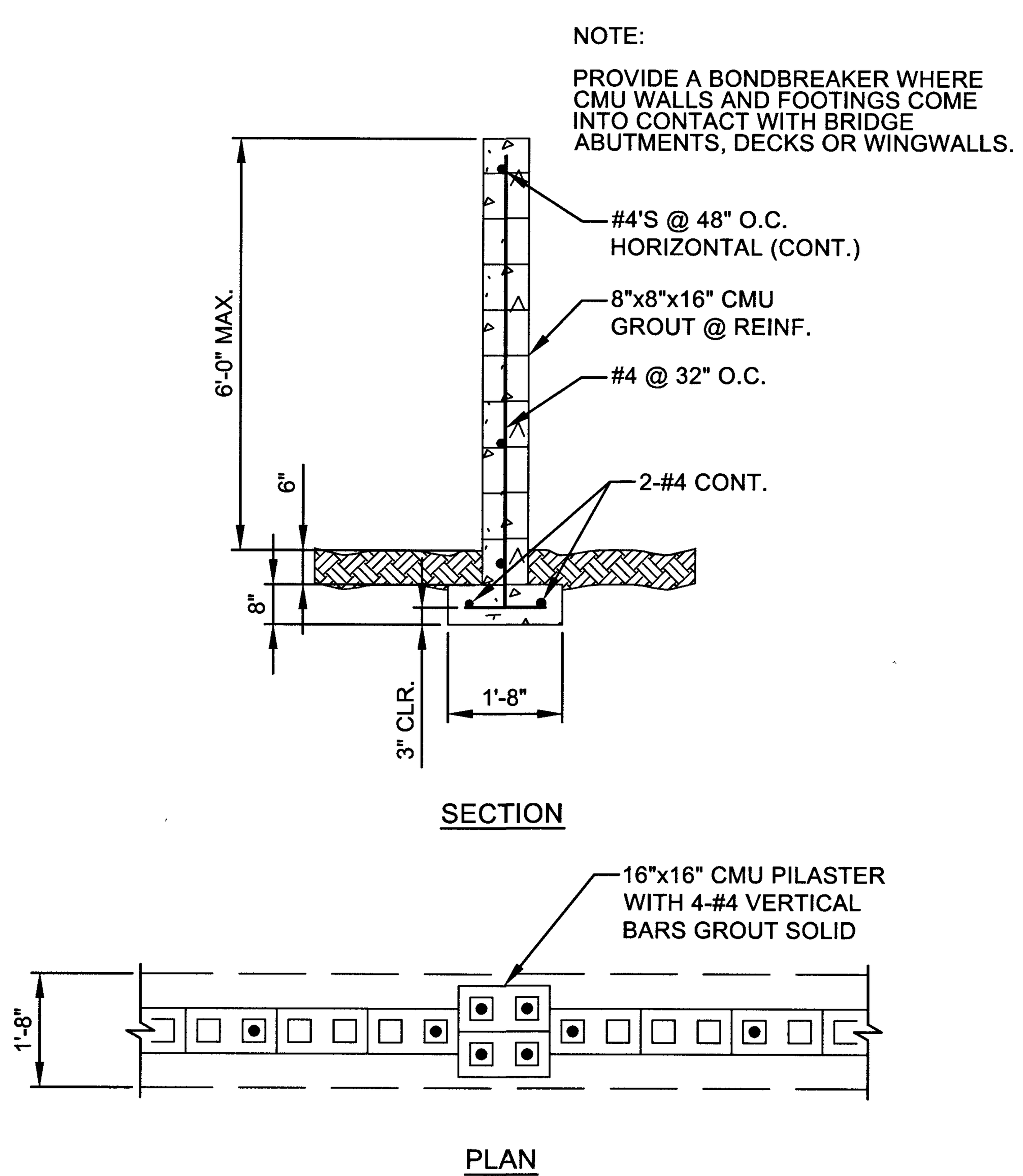

(E) MASONRY WALL DETAIL
NOT TO SCALE

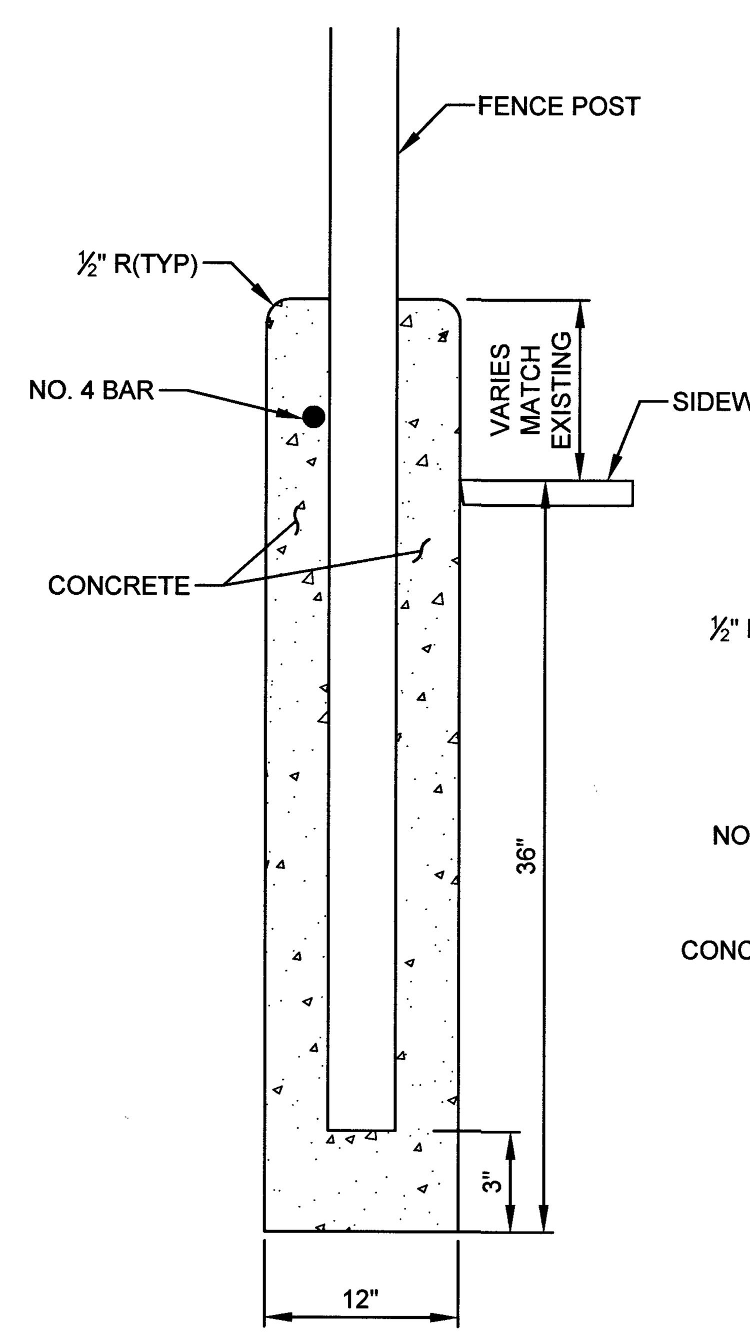

(F) FENCE FOOTING
NOT TO SCALE

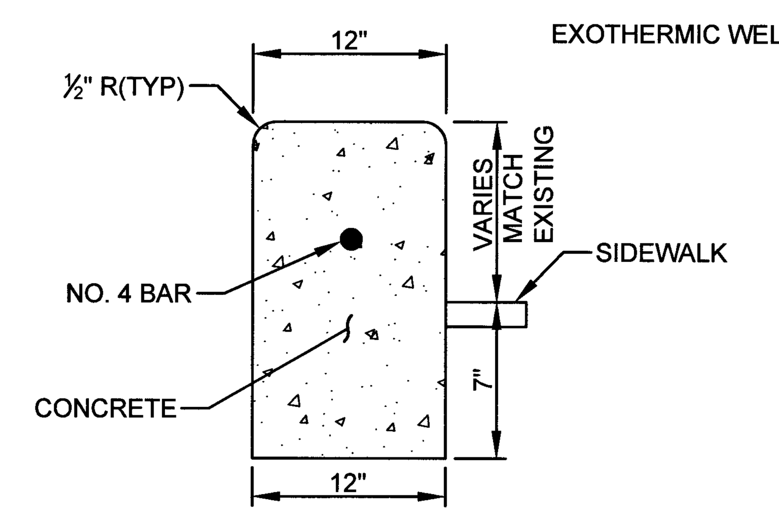

NOTE:
1. WEAKEND PLANE JOINT EVERY 10', FOR JOINT DETAIL SEE USDCCA DWG NO 234.
2. ½" EXPANSION JOINT AT ALL COLD JOINTS, FOR JOINT DETAIL SEE USDCCA DWG NO 234.

(G) FENCE STEM WALL
NOT TO SCALE

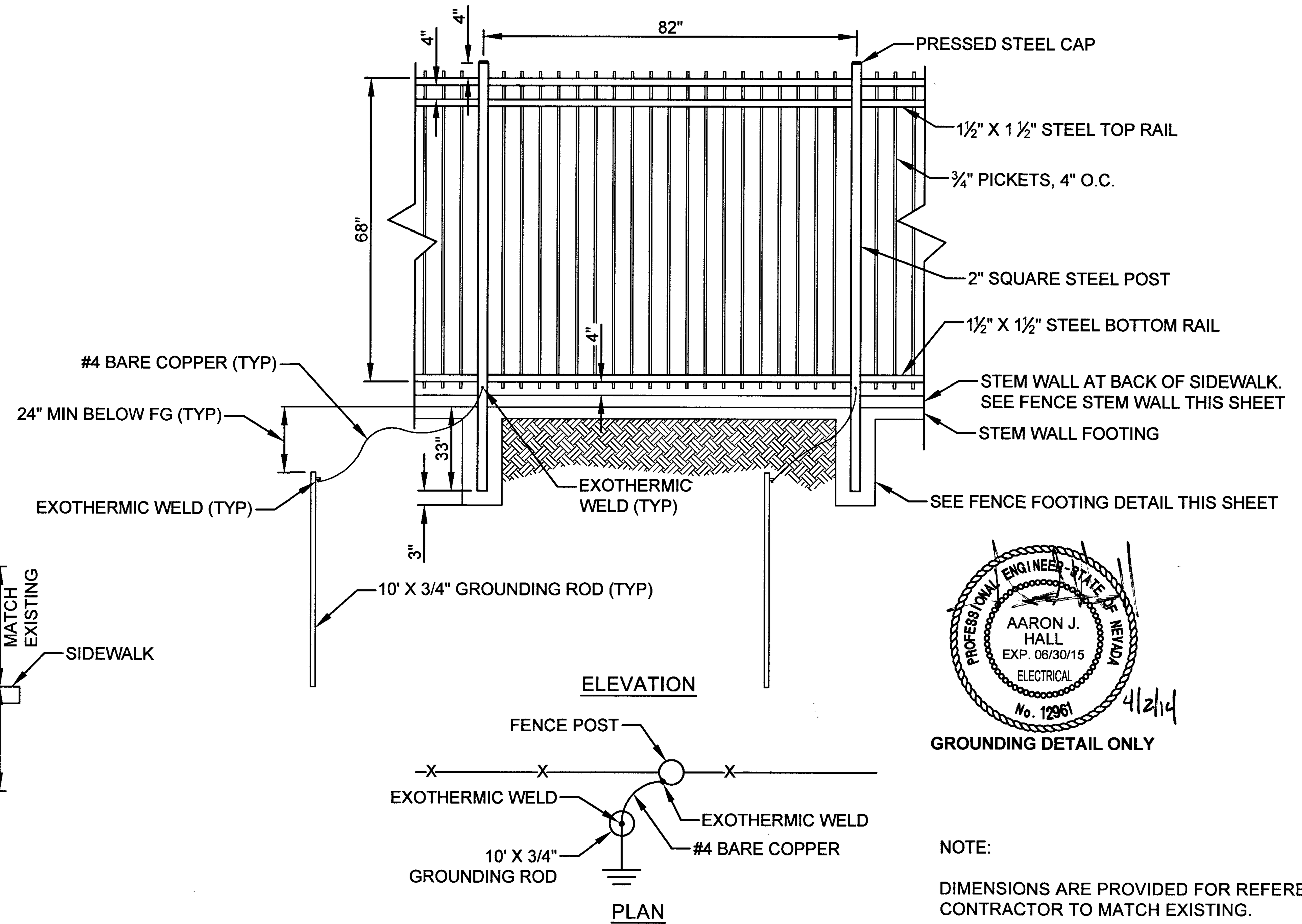

NOTE:
1. ALL CONNECTIONS SHALL BE EXOTHERMIC WELDS.
2. ALL BONDING JUMPERS SHALL BE #4 STRANDED BARE COPPER.
3. GROUND WROUGHT IRON FENCE FOR 138 KV PER NEC/NESC.

(H) WROUGHT IRON FENCE AND GROUNDING
NOT TO SCALE

PROFESSIONAL ENGINEER - STATE OF NEVADA
AARON J. HALL
EXP. 06/30/15
ELECTRICAL
No. 12961
4/2/14
GROUNDING DETAIL ONLY

NOTE:
DIMENSIONS ARE PROVIDED FOR REFERENCE ONLY. CONTRACTOR TO MATCH EXISTING.

FAST
Call before you UnderGround
1-702-432-5300
FREEWAY AND ARTERIAL SYSTEM OF TRANSPORTATION

AVOID OVERHEAD POWER LINE CONTACT. IT'S COSTLY.
Call before you Overhead
1-702-227-2929
NV ENERGY ENVIRONMENT AND SAFETY SERVICES DEPARTMENT

Call before you Dig
AVOID CUTTING UNDERGROUND UTILITY LINES. IT'S COSTLY.
Call 811

HANSEN #29930

NO.	DATE	REVISION	BY	APVD
DSGN M. WARNICK	DR D. PUBLOW	CHK CH2M HILL	APVD J. GRIEST	

DEPARTMENT OF PUBLIC WORKS
ENGINEERING DESIGN SECTION
CITY ENGINEER : DAVID N. BOWERS, P.E.
PROJECT MANAGER : GINA VENGLASS, P.E.
CITY OF LAS VEGAS NEVADA

DURANGO HILLS RELIEF SEWER PROJECT

CH2MHILL®
2485 VILLAGE VIEW DRIVE, SUITE 350, HENDERSON, NV 89074
PHONE 702-369-6175, CH2M HILL Project #240066

FENCE AND WALL DETAILS

PROFESSIONAL ENGINEER - STATE OF NEVADA
JEFFREY N. GRIEST
EXP. 06/30/15
CIVIL
No. 17156
4-22-14

Sheet D8
30 of 35
DATE April 2014
DWG NO. 307V1045

FILE NAME: DHRS_LAYOUT_C3D_STORM DRAIN.DWG

NOTE: DETAIL INCLUDED FROM DCSWCS STANDARDS FOR REFERENCE PURPOSES.

NOTES:

1. Manhole shall conform to SD-1A and SD-1B.
2. Flow channel shall conform to SD-9.
3. Special manholes upon Agency approval.
4. Wye, piping and elbows shall be one size larger than the incoming sewer line. Material shall be SDR 26 PVC.
5. High drop and low drop connections may be used only where no other lateral connection alternative including parallel sewer per SD-24 is possible.
6. Manholes receiving high drop and low drop, connections shall have corrosion protection as required by Agency.
7. All pipe connections to manhole shall conform to Section 4.9.5.

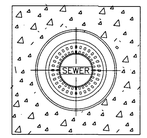

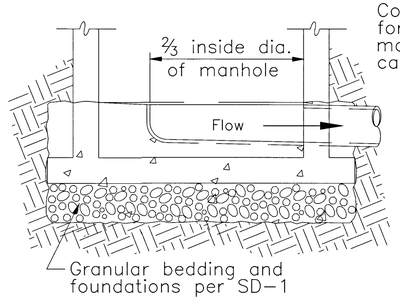

TERMINAL MANHOLE

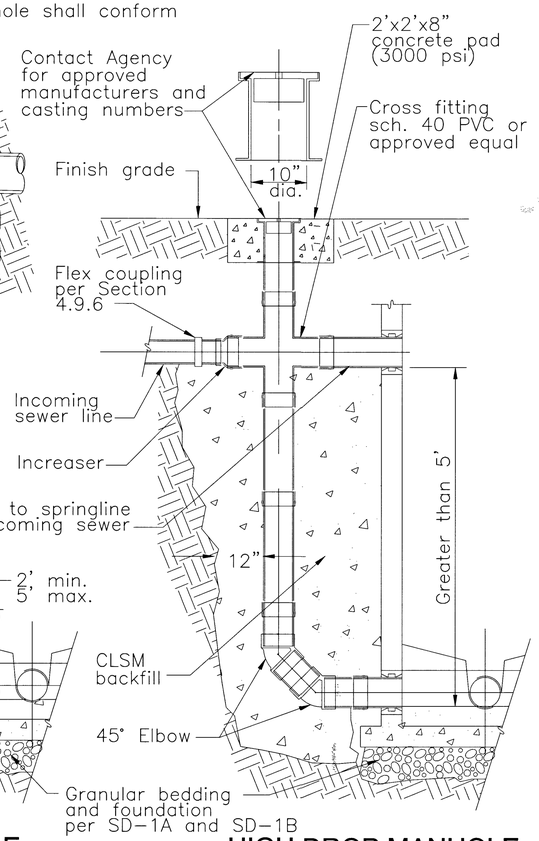

HIGH DROP MANHOLE

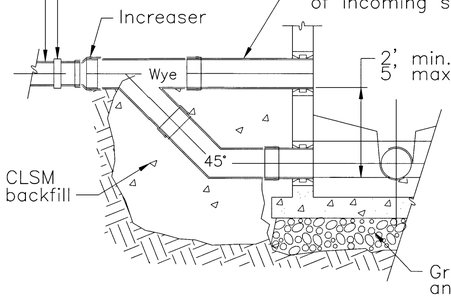

LOW DROP MANHOLE

SPECIAL MANHOLES-AGENCY AUTHORIZATION REQUIRED

ISSUED:

NUMBER: SD-12

FILE NAME: DHRS_LAYOUT_C3D_DETAILS.DWG

FAST Call before you UnderGround 1-702-432-5300 FREEWAY AND ARTERIAL SYSTEM OF TRANSPORTATION

AVOID OVERHEAD POWER LINE CONTACT. IT'S COSTLY. Call before you Overhead 1-702-227-2929 NV ENERGY ENVIRONMENT AND SAFETY SERVICES DEPARTMENT

Call before you Dig AVOID CUTTING UNDERGROUND UTILITY LINES. IT'S COSTLY. Call 811

HANSEN #29930

NO.	DATE	REVISION	BY	APVD

DSGN M. WARNICK | DR D. PUBLOW | CHK CH2M HILL | APVD J. GRIEST

DEPARTMENT OF PUBLIC WORKS
ENGINEERING DESIGN SECTION
CITY ENGINEER: DAVID N. BOWERS, P.E.
PROJECT MANAGER: GINA VENGLASS, P.E.
DURANGO HILLS RELIEF SEWER PROJECT

CITY OF LAS VEGAS NEVADA

CH2MHILL®
2485 VILLAGE VIEW DRIVE, SUITE 350, HENDERSON, NV 89074
PHONE 702-383-6175, CH2M HILL Project #240066

DROP MANHOLE DETAIL

PROFESSIONAL ENGINEER-STATE OF NEVADA
JEFFREY N. GRIEST
EXP. 06/30/15
CIVIL
No. 17156
11-21-14

Sheet D9
31 of 35
DATE April 2014
DWG NO. 307V1045

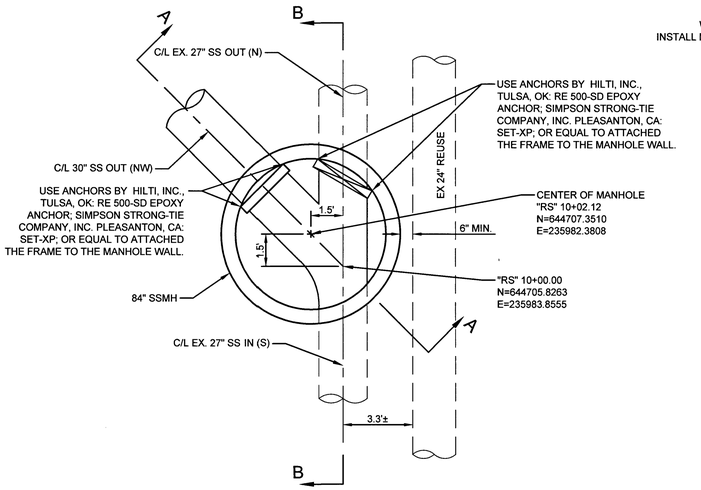

PLAN

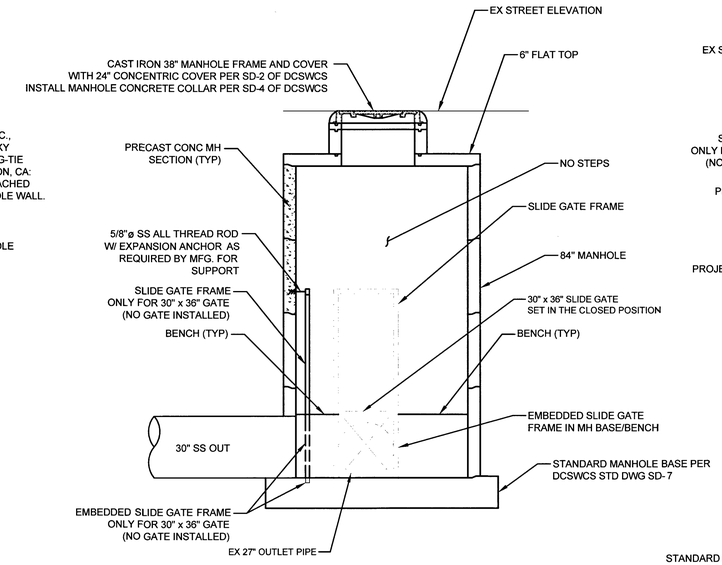

SECTION A-A

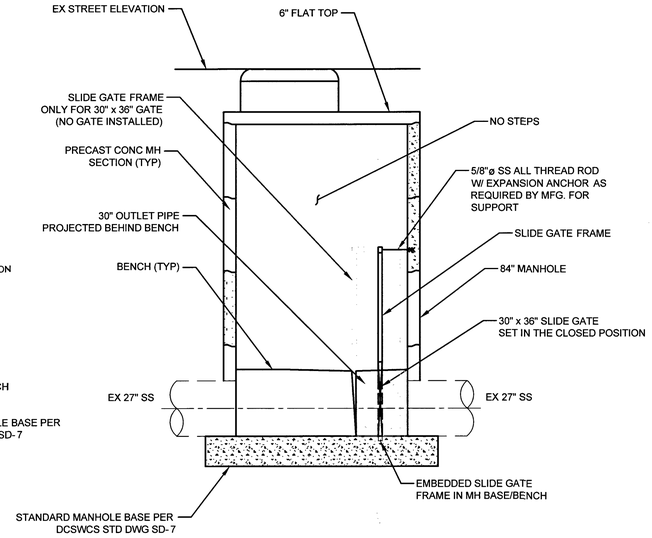

SECTION B-B

(A) 84" OFFSET SSMH
NOT TO SCALE

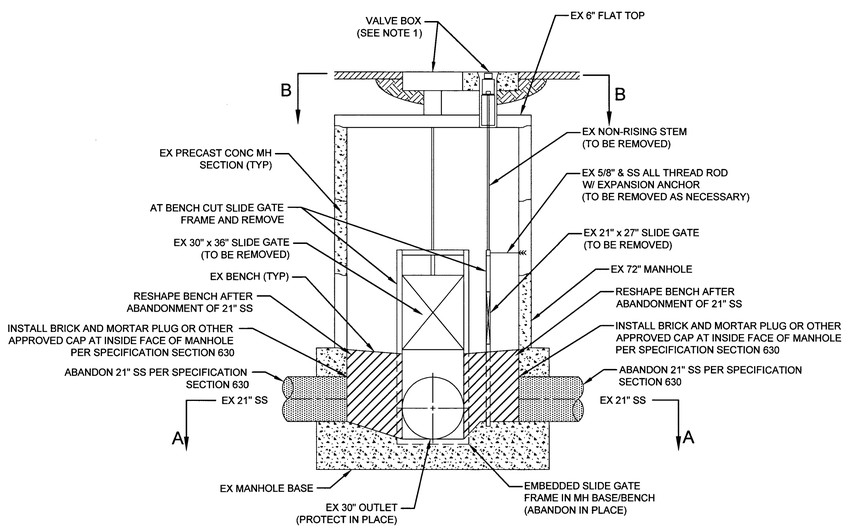

TOP PLAN
NOT TO SCALE

NOTE

1. REMOVE VALVE BOX TO THE TOP OF THE DIVERSION STRUCTURE. FILL REMAINING VALVE BOX WITH GROUT

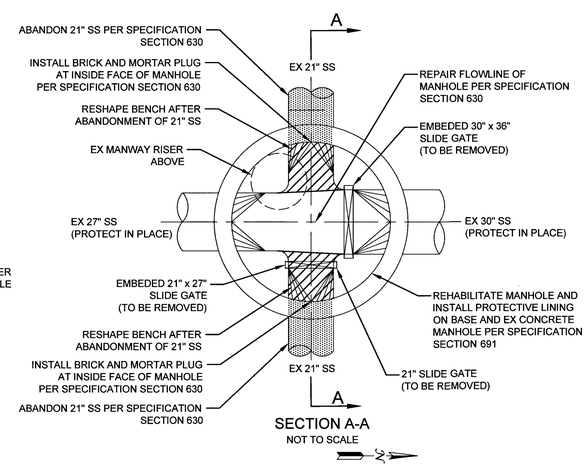

SECTION A-A
NOT TO SCALE

(B) EXISTING DIVERSION STRUCTURE
NOT TO SCALE

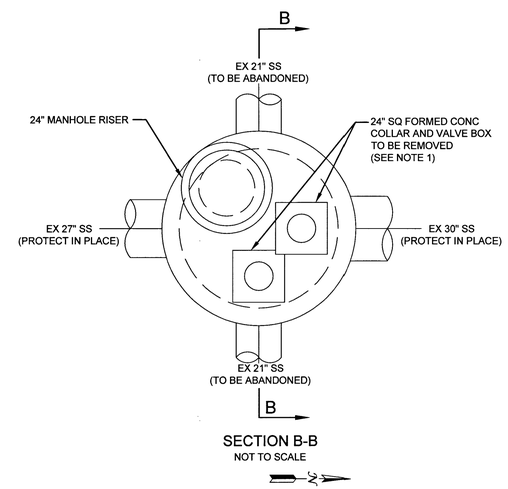

SECTION B-B
NOT TO SCALE

FAST
Call before you UnderGround
1-702-432-5300
FREEWAY AND ARTERIAL SYSTEM OF TRANSPORTATION

AVOID OVERHEAD POWER LINE CONTACT. IT'S COSTLY.
Call before you Overhead
1-702-227-2929
NV ENERGY ENVIRONMENT AND SAFETY SERVICES DEPARTMENT

Call before you Dig
AVOID CUTTING UNDERGROUND UTILITY LINES. IT'S COSTLY.
Call 811

HANSEN #29930

NO.	DATE	REVISION	BY	APVD

DSGN M. WARNICK | DR D. PUBLOW | CHK CH2M HILL | APVD J. GRIEST

DEPARTMENT OF PUBLIC WORKS
ENGINEERING DESIGN SECTION
CITY ENGINEER : DAVID N. BOWERS, P.E.
PROJECT MANAGER : GINA VENGLASS, P.E.
DURANGO HILLS RELIEF SEWER PROJECT

CITY OF LAS VEGAS NEVADA

CH2MHILL®
2565 FIELDCREST DRIVE, SUITE 500, HENDERSON, NV 89074
PHONE 702-384-6175, CH2M HILL Project #240586

MANHOLE DETAILS

PROFESSIONAL ENGINEER - STATE OF NEVADA
JEFFREY N. GRIEST
EXP. 06/30/15
CIVIL
No. 17156
4-22-14

Sheet D10
32 of 35
DATE April 2014
DWG NO. 307V1045

FILE NAME: DHRS_LAYOUT_C3D_DETAILS.DWG

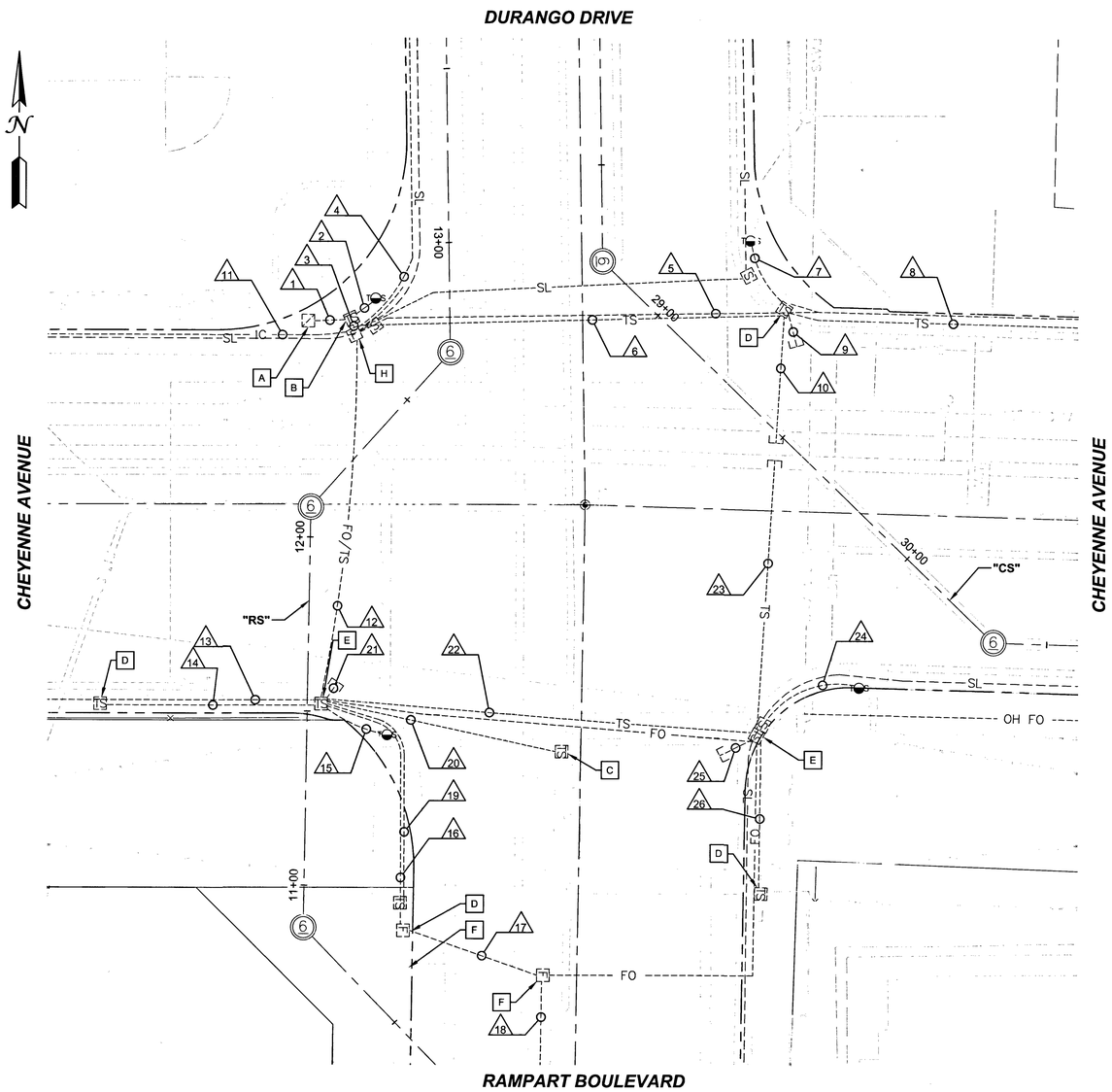

NOT TO SCALE

CABLE TYPE \ CONDUIT SIZE	1 (1)2"	2 (1)2"	3 (3)3"	4 (1)2"	5 (1)3"	6 (2)3"	7 (1)2"	8 (1)1.5"	9 (1)2"	10 (2)3"	11 (1)3"	12 (2)3"	13 (1)1.5"	14 (1)1.5"	15 (1)2"	16 (2)2"	17 (1)3"	18 (1)4"	19 (2)1.5"	20 (1)1.5"	21 (1)1.5"	22 (2)3"	23 (2)3"	24 (1)3"	25	26 (2)2" (2)1.5"
25 CONDUCTOR		1	3			1	1	E	E	E		2		E	1				E	E	E	1	E	1	L	E
#10 W		2	3			1	1	M	M	M		2		M	1				M	M	M	1	M	1	O	M
#10 B		2	3			1	1	P	P	P		2		P	1				P	P	P	1	P	1	O	P
COAXIAL		1	3			1	1	T	T	T		2		T	1				T	T	T	1	T	1	P	T
CAMERA POWER			3			1	1	Y	Y	Y		2		Y	1				Y	Y	Y	1	Y	1	S	Y
BOND		1	3			1	1					2			1							1		1		
FIBER			1	1	1						1	1				1	1	1								
6 PAIR			1		1						1	1				1	1	1								
FAST CAMERA			1									1			1											
#10 G			3			1	1					2			1							1		1		
OPTICOM CABLE		1	1			1	1																			
IC																										

CHEYENNE AND RAMPART/DURANGO - EXISTING WIRE SCHEDULE

LEGEND

- # EXISTING CONDUIT RUNS
- A EXISTING 200 AMP SERVICE
- B EXISTING SIGNAL CABINET
- C EXISTING NO. 3.5 PULL BOX
- D EXISTING NO. 5 PULL BOX
- E EXISTING NO. 7 PULL BOX
- F EXISTING P30 PULL BOX
- G EXISTING T100 SPLICE VAULT
- H EXISTING T200 SPLICE VAULT

NOTES:

1. CONTRACTOR SHALL VERIFY ALL HORIZONTAL AND VERTICAL LOCATIONS OF EXISTING FACILITIES BEING TIED INTO OR CROSSING PRIOR TO ANY WORK BEING DONE. CONTRACTOR SHALL COORDINATE ANY DISCREPANCIES WITH THE ENGINEER.
2. THE CONTRACTOR IS TO MAINTAIN AND KEEP OPERATIONAL ALL EXISTING ITS INFRASTRUCTURE WITHIN THE CONSTRUCTION LIMITS. IF ANY EXISTING ITS INFRASTRUCTURE IS DAMAGED DUE TO CONSTRUCTION WITHIN THE PROJECT LIMITS THE CONTRACTOR SHALL IMMEDIATELY CONTACT MR. JESUS "CHUY" MARMOLEJO (RTC/FAST MANAGER TRAFFIC SYSTEMS MAINTENANCE) AT 702-604-7078.

FAST
Call before you UnderGround
1-702-432-5300
FREEWAY AND ARTERIAL SYSTEM OF TRANSPORTATION

AVOID OVERHEAD POWER LINE CONTACT. IT'S COSTLY.
Call before you Overhead
1-702-227-2929
NV ENERGY ENVIRONMENT AND SAFETY SERVICES DEPARTMENT

Call before you Dig
AVOID CUTTING UNDERGROUND UTILITY LINES. IT'S COSTLY.
Call 811

HANSEN #29930

NO.	DATE	REVISION	BY	APVD

DSGN	DR	CHK	APVD
M. WARNICK	D. PUBLOW	CH2M HILL	J. GRIEST

DEPARTMENT OF PUBLIC WORKS
ENGINEERING DESIGN SECTION
CITY ENGINEER: DAVID N. BOWERS, P.E.
PROJECT MANAGER: GINA VENGLASS, P.E.

DURANGO HILLS RELIEF SEWER PROJECT

CITY OF LAS VEGAS NEVADA

CH2MHILL®
2485 VILLAGE VIEW DRIVE, SUITE 350, HENDERSON, NV 89074
PHONE 702-369-6175, CH2M HILL Project #240068

EXISTING TRAFFIC SIGNAL UNDERGROUNDS DURANGO / CHEYENNE

PROFESSIONAL ENGINEER - STATE OF NEVADA
JEFFREY N. GRIEST
EXP. 06/30/15
CIVIL
No. 17156
4-22-14

Sheet TS1
33 of 35
DATE April 2014
DWG NO. 307V1045

FILE NAME: DHRS_LAYOUT_C3D_TRAFFIC SIGNAL.DWG

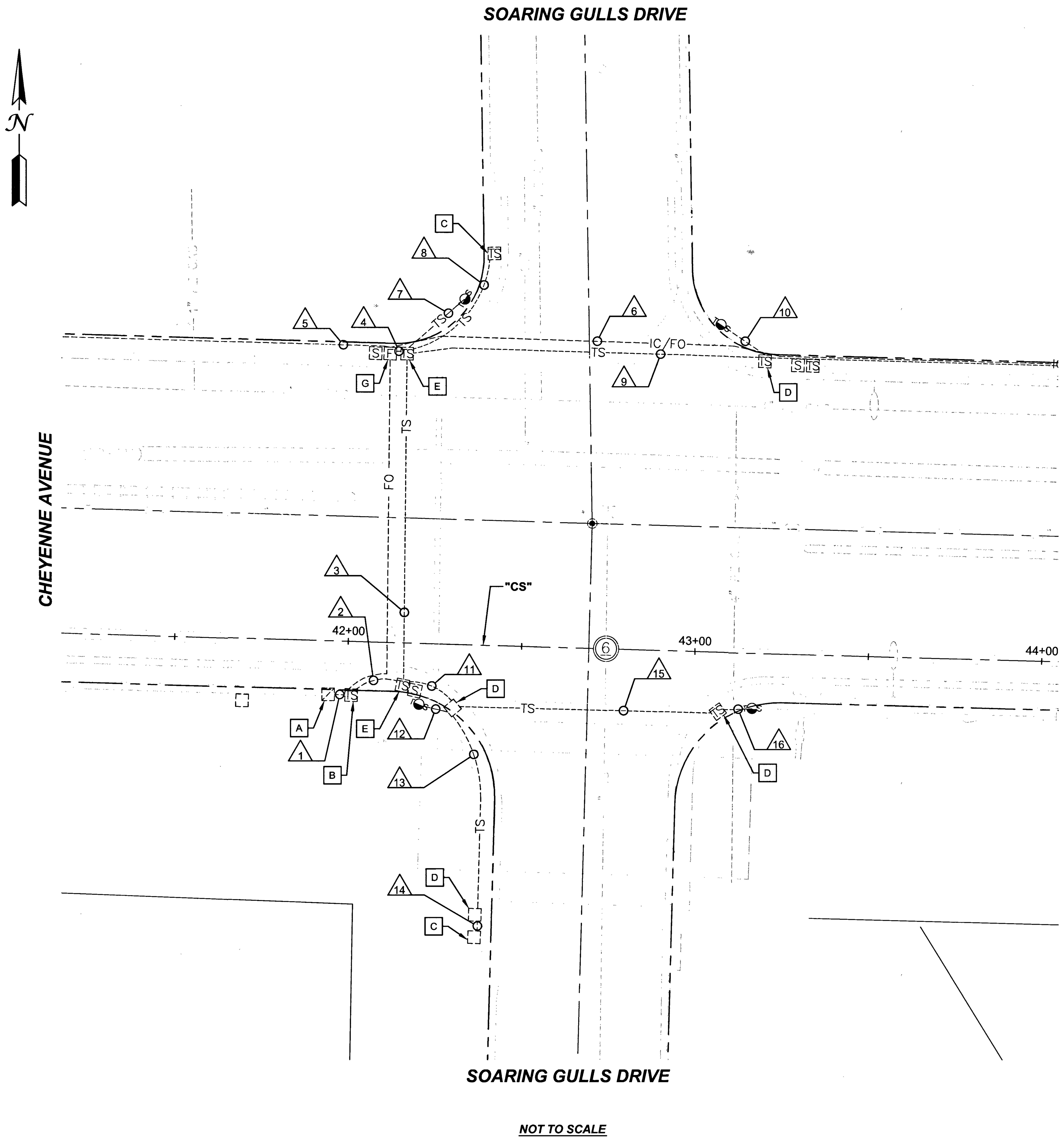

NOT TO SCALE

CHEYENNE AND SOARING GULLS - EXISTING WIRE SCHEDULE																
CABLE TYPE	1	2	3	4	5	6	7	8	9	10	11	12	13	14	15	16
25 CONDUCTOR		4	2				1	E	1	1	2	1	E	E	1	1
#10 W		8	4				2	M	2	2	4	2	M	M	2	2
#10 B								P					P	P		
COAXIAL		4	2				1	T	1	1	2	1	T	T	1	1
CAMERA POWER		4	2				1	Y	1	1	2	1	Y	Y	1	1
BOND																
FIBER						1										
6 PAIR																
FAST CAMERA																
#10 G																
OPTICOM CABLE		2									2	1			1	1
#8 GROUND		4	2				1		1	1	2	1			1	1
IC		2	2	2	2	2										
CONDUIT SIZE		(4)3" (2)2"	(2)3"	(1)3"	(1)3"	(1)2"	(1)2"	(1)2"	(1)3" (1)2"	(1)2"	(2)3" (1)2"	(1)2"	(1)2"	(1)2"	(2)3" (1)2"	(1)2"

LEGEND

- # EXISTING CONDUIT RUNS
- A EXISTING 200 AMP SERVICE
- B EXISTING SIGNAL CABINET
- C EXISTING NO. 3.5 PULL BOX
- D EXISTING NO. 5 PULL BOX
- E EXISTING NO. 7 PULL BOX
- F EXISTING P30 PULL BOX
- G EXISTING T100 SPLICE VAULT
- H EXISTING T200 SPLICE VAULT

NOTES:

1. CONTRACTOR SHALL VERIFY ALL HORIZONTAL AND VERTICAL LOCATIONS OF EXISTING FACILITIES BEING TIED INTO OR CROSSING PRIOR TO ANY WORK BEING DONE. CONTRACTOR SHALL COORDINATE ANY DISCREPANCIES WITH THE ENGINEER.
2. THE CONTRACTOR IS TO MAINTAIN AND KEEP OPERATIONAL ALL EXISTING ITS INFRASTRUCTURE WITHIN THE CONSTRUCTION LIMITS. IF ANY EXISTING ITS INFRASTRUCTURE IS DAMAGED DUE TO CONSTRUCTION WITHIN THE PROJECT LIMITS THE CONTRACTOR SHALL IMMEDIATELY CONTACT MR. JESUS "CHUY" MARMOLEJO (RTC/FAST MANAGER TRAFFIC SYSTEMS MAINTENANCE) AT 702-604-7078.

FAST
Call before you UnderGround
1-702-432-5300
FREEWAY AND ARTERIAL SYSTEM OF TRANSPORTATION

AVOID OVERHEAD POWER LINE CONTACT. IT'S COSTLY.
Call before you Overhead
1-702-227-2929
NV ENERGY ENVIRONMENT AND SAFETY SERVICES DEPARTMENT

Call before you Dig
AVOID CUTTING UNDERGROUND UTILITY LINES. IT'S COSTLY.
Call 811

HANSEN #29930

NO.	DATE	REVISION	BY	APVD

DSGN	DR	CHK	APVD
M. WARNICK	D. PUBLOW	CH2M HILL	J. GRIEST

DEPARTMENT OF PUBLIC WORKS
ENGINEERING DESIGN SECTION
CITY ENGINEER : DAVID N. BOWERS, P.E.
PROJECT MANAGER : GINA VENGLASS, P.E.

DURANGO HILLS RELIEF SEWER PROJECT

CITY OF LAS VEGAS NEVADA

CH2MHILL®
2485 VILLAGE VIEW DRIVE, SUITE 350, HENDERSON, NV 89074
PHONE 702-369-6175, CH2M HILL Project #240066

EXISTING TRAFFIC SIGNAL UNDERGROUNDS SOARING GULLS / CHEYENNE

PROFESSIONAL ENGINEER - STATE OF NEVADA
JEFFREY N. GRIEST
EXP. 06/30/15
CIVIL
No. 17156
4-22-14

Sheet TS2
34 of 35

DATE April 2014
DWG NO. 307V1045

FILE NAME: DHRS_LAYOUT_C3D_TRAFFIC SIGNAL.DWG

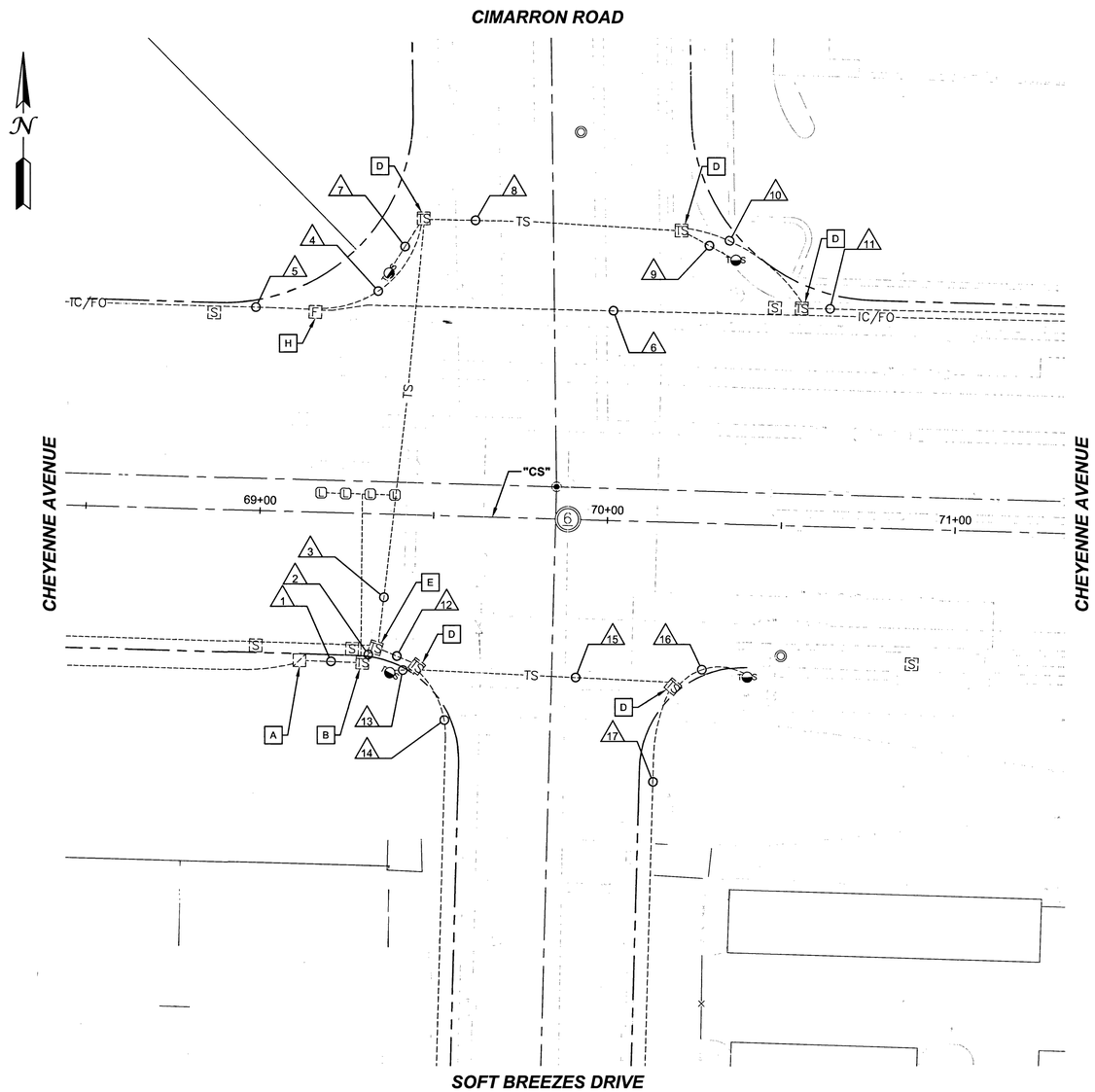

NOT TO SCALE

CHEYENNE AND SOARING GULLS - EXISTING WIRE SCHEDULE

CABLE TYPE \ CONDUIT SIZE	1	2	3	4	5	6	7	8	9	10	11	12	13	14	15	16	17
25 CONDUCTOR		4	2				1	1	1	E	E	2	1	E	1	1	E
#10 W		8	4				2	2	2	M	M	4	2	M	2	2	M
#10 B										P	P			P			P
COAXIAL		4	2				1	1	1	T	T	2	1	T	1	1	T
CAMERA POWER		4	2				1	1	1	Y	Y	2	1	Y	1	1	Y
BOND																	
FIBER						1											
6 PAIR																	
FAST CAMERA																	
#10 G																	
OPTICOM CABLE		2	1				1					1	1				
#8 GROUND		3	2				1	1	1			1	1				
IC		2	2	3	2	2											
		(4)3" (2)2"	(2)3"	(1)2"	(1)2"	(1)3"	(1)2"	(2)3"	(1)2"	(1)3" (1)2"	(1)3" (1)2"	(1)3"	(1)2"	(2)2"	(2)3" (1)2"	(1)2"	(2)2" (2)1.5"

LEGEND

- # EXISTING CONDUIT RUNS
- A EXISTING 200 AMP SERVICE
- B EXISTING SIGNAL CABINET
- C EXISTING NO. 3.5 PULL BOX
- D EXISTING NO. 5 PULL BOX
- E EXISTING NO. 7 PULL BOX
- F EXISTING P30 PULL BOX
- G EXISTING T100 SPLICE VAULT
- H EXISTING T200 SPLICE VAULT

NOTES:

1. CONTRACTOR SHALL VERIFY ALL HORIZONTAL AND VERTICAL LOCATIONS OF EXISTING FACILITIES BEING TIED INTO OR CROSSING PRIOR TO ANY WORK BEING DONE. CONTRACTOR SHALL COORDINATE ANY DISCREPANCIES WITH THE ENGINEER.
2. THE CONTRACTOR IS TO MAINTAIN AND KEEP OPERATIONAL ALL EXISTING ITS INFRASTRUCTURE WITHIN THE CONSTRUCTION LIMITS. IF ANY EXISTING ITS INFRASTRUCTURE IS DAMAGED DUE TO CONSTRUCTION WITHIN THE PROJECT LIMITS THE CONTRACTOR SHALL IMMEDIATELY CONTACT MR. JESUS "CHUY" MARMOLEJO (RTC/FAST MANAGER TRAFFIC SYSTEMS MAINTENANCE) AT 702-604-7078.

FAST
Call before you UnderGround
1-702-432-5300
FREEWAY AND ARTERIAL SYSTEM OF TRANSPORTATION

AVOID OVERHEAD POWER LINE CONTACT. IT'S COSTLY.
Call before you Overhead
1-702-227-2929
NV ENERGY ENVIRONMENT AND SAFETY SERVICES DEPARTMENT

Call before you Dig
AVOID CUTTING UNDERGROUND UTILITY LINES. IT'S COSTLY.
Call 811

HANSEN #29930

NO.	DATE	REVISION	BY	APVD

DSGN	DR	CHK	APVD
M. WARNICK	D. PUBLOW	CH2M HILL	J. GRIEST

DEPARTMENT OF PUBLIC WORKS
ENGINEERING DESIGN SECTION
CITY ENGINEER: DAVID N. BOWERS, P.E.
PROJECT MANAGER: GINA VENGLASS, P.E.

DURANGO HILLS
RELIEF SEWER PROJECT

CITY OF LAS VEGAS NEVADA

CH2MHILL®
2485 VILLAGE VIEW DRIVE, SUITE 350, HENDERSON, NV 89074
PHONE 702-369-8175, CH2M HILL Project #240065

EXISTING TRAFFIC SIGNAL
UNDERGROUNDS
CIMARRON / CHEYENNE

PROFESSIONAL ENGINEER - STATE OF NEVADA
JEFFREY N. GRIEST
EXP. 06/30/15
CIVIL
No. 17156
4-22-14

Sheet TS3
35 of 35
DATE April 2014
DWG NO. 307V1045

FILE NAME: DHRS_LAYOUT_C3D_TRAFFIC SIGNAL.DWG