GENERAL NOTES:

ANY NOTES LOCATED IN DRAWING AREA TAKE PRECEDENCE OVER STANDARD NOTES.

REFER TO A CURRENT NVEnergy ELECTRIC SERVICE REQUIREMENTS HANDBOOK FOR FURTHER CLARIFICATION OF NVEnergy STANDARDS.

THE APPLICANT SHALL INFORM THE INSPECTOR AT LEAST 48 HOURS BEFORE COMMENCING ANY ITEM OF CONSTRUCTION OR INSTALLATION OF MATERIAL TO ENABLE PROPER INSPECTION OF MATERIALS AND WORKMANSHIP. MAIN TRENCH WIRE PULLS TO BE SCHEDULED 72 HOURS IN ADVANCE OF INSTALLATION. APPLICANT'S PROJECT WILL NOT BE SCHEDULED UNTIL FINAL APPROVAL FROM NVEnergy UNDERGROUND & ELECTRICAL INSPECTORS.

ALL WORK SHALL BE ACCOMPLISHED IN STRICT ACCORDANCE WITH THE SPECIFICATIONS SET FORTH IN THE ELECTRIC SERVICE REQUIREMENTS HANDBOOK, AS CURRENTLY ADOPTED BY NVEnergy. THE CONTRACTOR SHALL SECURE COPIES OF THE AFOREMENTIONED CONSTRUCTION SPECIFICATIONS ON HIS OR HER OWN BEHALF.

SYMBOLS ARE NOT TO SCALE AND DO NOT NECESSARILY REPRESENT ACTUAL LOCATIONS OF FACILITIES.

THIS DRAWING ILLUSTRATES DATA COLLECTED FROM VARIOUS SOURCES AND MAY NOT REPRESENT A SURVEY OF THE PREMISES.

APPLICANT SHALL FIELD DETERMINE POSITION AND DEPTH OF EXISTING UTILITY EQUIPMENT PRIOR TO COMMENCING CONSTRUCTION.

USE CAUTION PRIOR TO EXCAVATION. CHECK TO ENSURE ADDITIONAL DEPTH IS NOT REQUIRED TO ACCOMMODATE GAS AND/OR WATER FACILITIES AND DRAINAGE CHANNELS.

CALL NVEnergy UNDERGROUND INSPECTORS 48 HOURS PRIOR TO START OF CONSTRUCTION FOR TRENCH INSPECTION BEFORE COVERING TRENCH.

ALL NVEnergy CABLE TO BE INSTALLED BEHIND CURB, UNLESS OTHERWISE STATED.

APPLICANT IS RESPONSIBLE FOR STAKING OF PROPERTY CORNERS & ELEVATIONS.

ALL HANDHOLES AND PULLBOXES SHALL BE INSTALLED TO FINISHED GRADE OR 6" ABOVE IF GRADE IS NOT ESTABLISHED.

ANY SUBSTRUCTURE VAULT INSTALLED IN GRAVEL, GRASS, OR BARE GROUND WILL REQUIRE A CONCRETED 8" WIDE AND 6" DEEP COLLAR AROUND BOX IN ACCORDANCE TO RS-G6.

2" PLASTIC CONDUIT BENDS (90°, 45°) WITH 36" MIN. RADIUS. (USE FIBERGLASS IF CONDUIT LENGTH IS OVER 500')

3" & 4" PLASTIC CONDUIT BENDS (90°, 45°) WITH 36" MIN. RADIUS.
(USE RGS IF CONDUIT LENGTH IS OVER 100')

6" PLASTIC CONDUIT BENDS (90°, 45°) WITH 48" MIN. RADIUS. (USE RGS IF CONDUIT LENGTH IS OVER 100')

WHEN INSTALLING CONDUIT IN FIELD, USE APPROPRIATE BENDS TO COMPLETE THE INSTALLATION.

DEFLECTION OF CONDUIT BENDS AND CONDUIT NOT TO EXCEED NVEnergy STANDARDS.

EXISTING STUB-OUT/CONDUIT INSTALLED BY PREVIOUS CONTRACTOR / DEVELOPER. NVEnergy DOES NOT GUARANTEE LOCATION, LENGTH, OR ACCESSIBILITY OF EXISTING STUB-OUT/CONDUIT. IF UTILIZING ANY PORTION OF EXISTING CONDUIT, IT MUST BE MANDRELED PRIOR TO FINAL RELEASE.

PREVIOUSLY MANDRELED CONDUIT WHICH HAS BEEN IN THE GROUND FOR OVER 6 MONTHS MUST BE RE-MANDRILLED PRIOR TO FINAL RELEASE.

WHEN NVEnergy FACILITIES ARE TO BE REMOVED, NVEnergy WILL REMOVE ALL WIRES AND EQUIPMENT. NVEnergy IS NOT RESPONSIBLE FOR THE REMOVAL OF CONDUIT RUNS OR SUBSTRUCTURES FROM THE PROPERTY.

NO COVERED PARKING IN FRONT OF EQUIPMENT.

ALL CONSTRUCTION AND MATERIALS SHALL BE IN ACCORDANCE WITH THE "UNIFORM STANDARD SPECIFICATIONS FOR PUBLIC WORKS CONSTRUCTION OFF-SITE IMPROVEMENTS, CLARK COUNTY AREA NEVADA", LATEST ISSUE; THE "UNIFORM STANDARD DRAWINGS FOR PUBLIC WORKS CONSTRUCTION, CLARK COUNTY AREA NEVADA", LATEST ISSUE; AND OTHER APPLICABLE APPROVED STANDARDS ISSUED BY THE CONTROLLING AGENCY; ALL LOCAL CITY CODES AND ORDINANCES APPLICABLE.

CIVIL LINETYPE LEGEND

CENTERLINE	——— — ——— — ———
PROPERTY LINE/ROW	——— – – – ———
CURB	———————
EDGE OF PAVEMENT	——\\\——\\\——\\\
EDGE OF SIDEWALK	———————
SEWER LINE	— S — S — S —
WATER LINE	— W — W — W —
COHW WATER LINE	— COHW — COHW —
LVVWD WATER LINE	— LVVWD — LVVWD —
SNWA WATER LINE	— SNWA — SNWA —
GAS LINE	— GAS — GAS —
TELEPHONE LINE	— TEL — TEL —
CABLE TV LINE	— CATV — CATV —
CABLE TV LINE	— FIBER — FIBER —
STORM DRAIN LINE	— SD — SD —
FIRE HYDRANT	SERVICE INDICATOR (S/L)
SIGNAL LIGHT	STREET LIGHT

METER LOCATION & ACCESS REQUIREMENTS

(NV ENERGY STANDARDS RPI-15 & RPI-G)

THIS STANDARD SPECIFIES THE REQUIREMENTS FOR THE LOCATION OF ALL NVENERGY (NVE) METERS AND SERVICE EQUIPMENT WITH THE EXCEPTION OF SINGLE-FAMILY RESIDENTIAL METERS (SEE RPI-2 FOR RESIDENTIAL METERS). REQUIREMENTS IN THIS STANDARD FACILITATE ACCESS TO SERVICE EQUIPMENT BY NVE PERSONNEL FOR PERFORMING OPERATIONS AND MAINTENANCE FUNCTIONS AS WELL AS FOR FIRE AND POLICE AGENCIES IN EMERGENCY SITUATIONS.

METER AND SERVICE ENTRANCE INSTALLATIONS MUST CONFORM TO THE LATEST REVISIONS OF RPI-G AND, SPECIFICALLY, THE "METER ACCESS" AND "METER LOCATIONS" SECTIONS OF RPI-G. THE STANDARD SERVICE POINT WILL BE LOCATED AT THE CORNER OF THE BUILDING NEAREST THE NV ENERGY SUPPLY. ALTERNATE SERVICE POINTS AND METER ROOMS, ALTHOUGH NOT PREFERRED, MAY, AT THE DISCRETION OF NVENERGY, BE ALLOWED PROVIDED THAT THEY MEET THE REQUIREMENTS OF SECTION 6 "ACCESS TO SERVICE EQUIPMENT" AND SECTION 8 "METER ROOMS".

ELECTRIC METER AND SERVICE EQUIPMENT INSTALLATIONS MUST BE READILY ACCESSIBLE TO AUTHORIZED REPRESENTATIVES OF NVE FOR READING, TESTING, AND INSPECTION AT ALL TIMES. CUSTOMER CONTACT WILL NOT BE REQUIRED FOR METER READING. PERMANENT VEHICLE ACCESS TO THE SERVICE EQUIPMENT IS REQUIRED FOR THE INSTALLATION AND MAINTENANCE OF SERVICE CABLES AND METERING EQUIPMENT.

THE SERVICE EQUIPMENT MUST BE ACCESSIBLE 24 HOURS/7 DAYS WITHOUT REQUIRING PASSAGE THROUGH RESTRICTED AREAS OR REQUIRING CUSTOMER CONTACT.

SERVICES 600V AND LESS, THE VEHICLE ACCESS WILL BE A MINIMUM 12' WIDE, 20' HIGH DIRECT PATH TO THE METERING EQUIPMENT.

ALL SERVICES GREATER THAN 600V (PRIMARY SERVICE) OR WHERE THE SERVICES INCLUDE THE INSTALLATION OF THREE-PHASE TRANSFORMERS, SWITCH OR FUSE CABINETS, CAPACITOR BANKS, OR OTHER LARGE EQUIPMENT, THE VEHICLE ACCESS WILL BE A MINIMUM 23' WIDE, WITH NO OVERHEAD OBSTRUCTION.

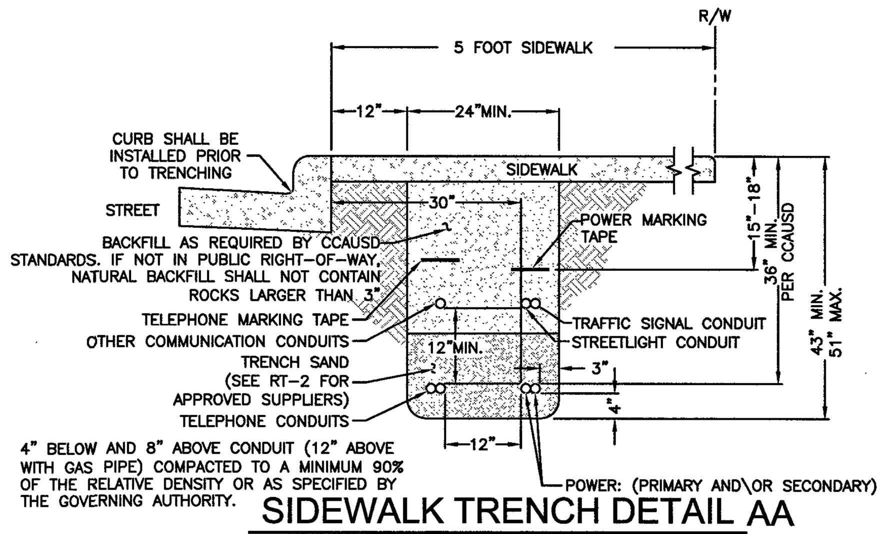

SIDEWALK TRENCH DETAIL AA

NVE U.G. STD. RT-7 (REV. 10/27/2014)
(RESIDENTIAL OR COMMERCIAL)

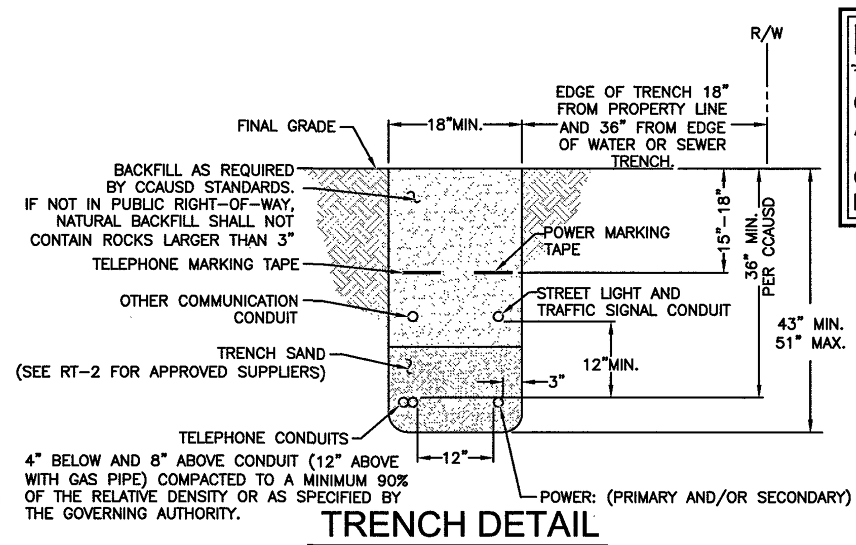

TRENCH DETAIL

NVE U.G. STD. RT-12 (REV. 10/27/2014)
(RESIDENTIAL AND COMMERCIAL)

NV ENERGY SCHEDULING NOTE: DAY (LANE BLOCKS)

THIS PROJECT WAS ESTIMATED WITH THE ASSUMPTION THAT ALL THE WORK BEING PERFORMED ON THIS PROJECT BY NV ENERGY CREWS CAN BE DONE DURING THE DAYTIME AND WILL REQUIRE TRAFFIC CONTROL.

GOVERNMENT APPROVAL OF THESE DRAWINGS DOES NOT INDICATE APPROVAL OF TRAFFIC CONTROL. PLEASE REFER TO THE BARRICADE PLAN FOR APPROVED TRAFFIC CONTROL REQUIREMENTS.

NVE STANDARDS

T,R,S: 20-61-20

APN: 13920301016
13920301002

SOURCE	PROJECT CONNECTED LOAD (3Ø)				LOOP
FC OR RISER	PH.	EX: KVA	ADDED KVA	TOTAL KVA	FC OR RISER
U70319	A	0	100	100	FUTURE
UGM98526	B	0	100	100	______
T01201	C	0	100	100	______

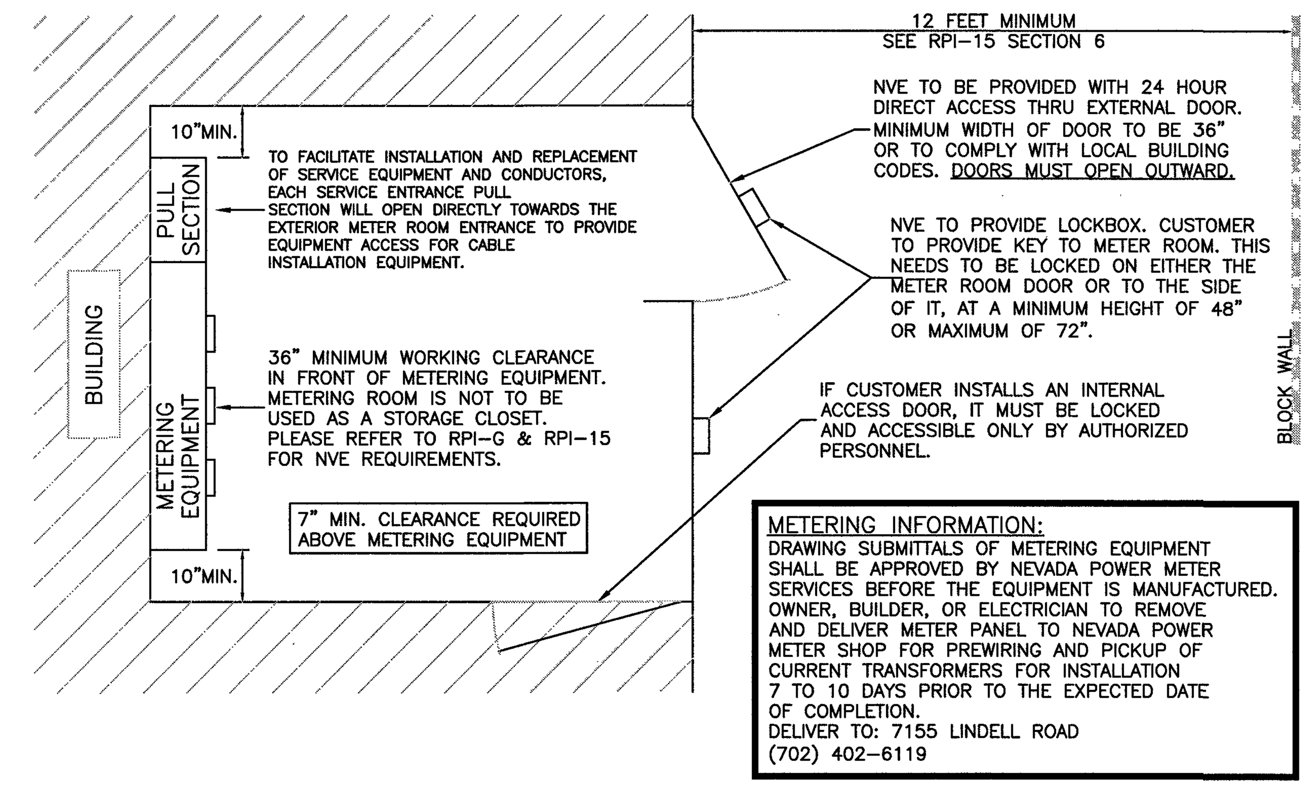

METERING INFORMATION:
DRAWING SUBMITTALS OF METERING EQUIPMENT SHALL BE APPROVED BY NEVADA POWER METER SERVICES BEFORE THE EQUIPMENT IS MANUFACTURED. OWNER, BUILDER, OR ELECTRICIAN TO REMOVE AND DELIVER METER PANEL TO NEVADA POWER METER SHOP FOR PREWIRING AND PICKUP OF CURRENT TRANSFORMERS FOR INSTALLATION 7 TO 10 DAYS PRIOR TO THE EXPECTED DATE OF COMPLETION.
DELIVER TO: 7155 LINDELL ROAD
(702) 402-6119

METER ROOM DETAIL

NVE U.G. STD. RPI-G & RPI-15
(NOT TO SCALE)

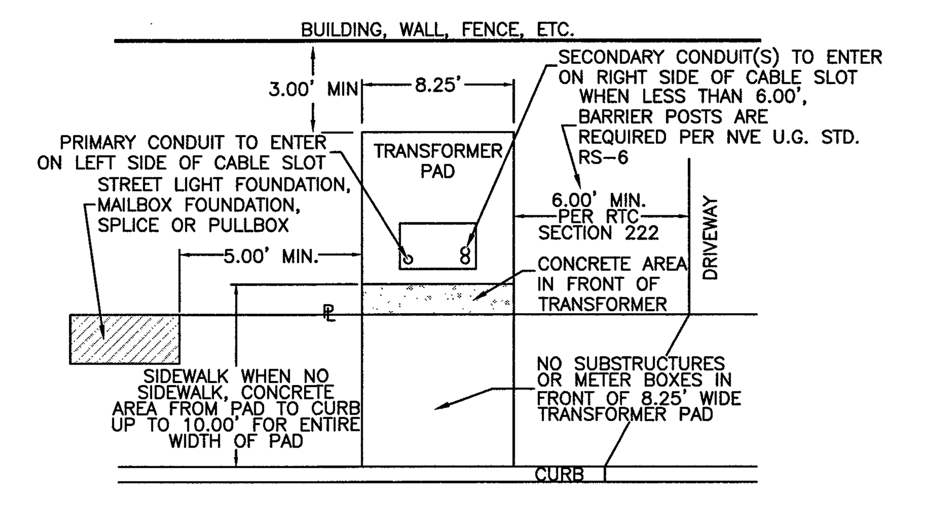

THREE-PHASE TRANSFORMER LOCATION DETAIL

NVE U.G. STD. RS-5 & RS-35 OR RS-37

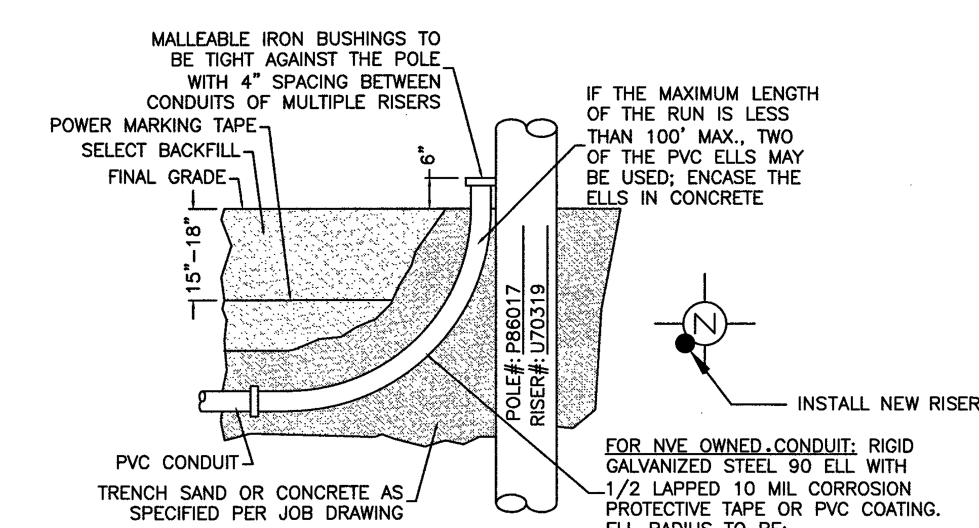

FOR NVE OWNED CONDUIT: RIGID GALVANIZED STEEL 90 ELL WITH 1/2 LAPPED 10 MIL CORROSION PROTECTIVE TAPE OR PVC COATING.
ELL RADIUS TO BE:
3" & 4" CONDUIT – 36"
6" CONDUIT – 48"

RISER DETAIL

CONDUIT RUN
PER NVE U.G. STD. RR-1
(TYPICAL)

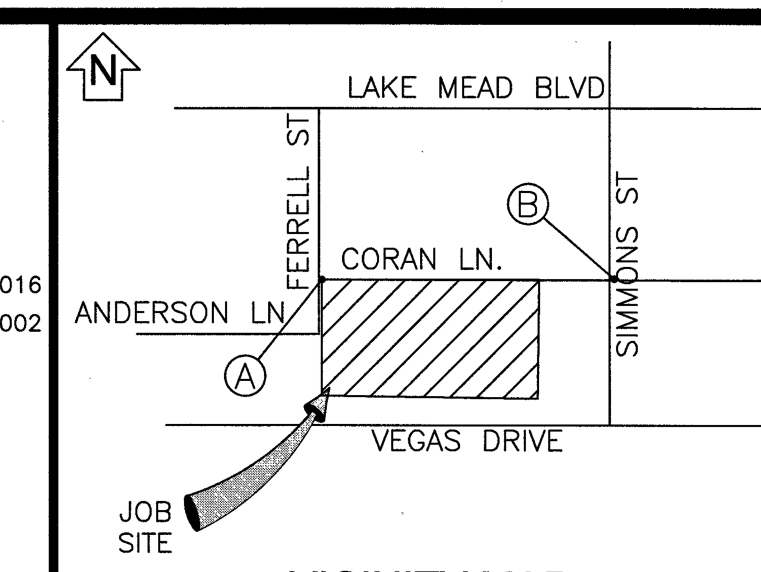

VICINITY MAP

(NOT TO SCALE)

EVERY EFFORT HAS BEEN MADE TO IDENTIFY ALL NVE FACILITIES. THE CUSTOMER SHALL CONFIRM THE EXISTENCE AND LOCATION OF THESE FACILITIES.

Call before you Dig
Avoid cutting underground utility lines. It's costly.
CALL 811
OR
1-800-227-2600
AND CLARK COUNTY TRAFFIC OPERATIONS
1-702-455-6000

REVISIONS

NO.	DESCRIPTION	DATE	G.A.
△			
△			
△			
△			
△			
△			
△			
△			
△			
△			

STANDARD

PROJECT PURPOSE:

PROVIDE 277/480V 3Ø SERVICE TO (1)800A METER TO NEW SCHOOL ADDITION.

NOTICE:

THIS EXHIBIT IS THE EXCLUSIVE AND CONFIDENTIAL PROPERTY OF NV ENERGY AND MAY NOT BE USED, REPRODUCED OR DISTRIBUTED WITHOUT THE EXPRESSED, WRITTEN APPROVAL OF NV ENERGY.

THE IMAGES HEREON ARE NOT ORTHOPHOTOGRAPHIC. ANY LOCATIONS DEPICTED HEREON ARE APPROXIMATE ONLY. THIS EXHIBIT WAS CREATED FOR GENERAL PRESENTATION AND DISCUSSION PURPOSES ONLY AND IS NOT PURPORTED TO REPRESENT ANY MEASURE OF ACCURACY. THIS EXHIBIT IS NOT TO BE UTILIZED IN ANY MANNER NOT CONSISTENT WITH THE INTENT OF ITS' CREATION AS STATED ABOVE.

CONSTRUCTION / INSPECTION REQUIREMENTS

WORK MUST CONFORM TO NVE ELECTRIC SERVICE STANDARDS, AVAILABLE AT: www.nvenergy.com/business/newconstruction/newconstructionS/servicestandards.cfm

NVE INSPECTOR MUST BE PRESENT TO INSPECT TRENCHING (SCHEDULE AT LEAST 72 HOURS IN ADVANCE) AT EACH OF THE FOLLOWING STAGES:
1. BOTTOM SAND AND CONDUIT INSTALLED
2. TOP SAND INSTALLED
3. BACKFILL INSTALLED

CONDUIT MUST BE MANDRILLED PRIOR TO RELEASE (COORDINATE WITH INSPECTOR).

NVE STAND BY CREW IS REQUIRED WHEN WORKING AT AN ENERGIZED VAULT OR TRANSFORMER. CALL STAND BY NUMBER (SEE TITLE BLOCK) TO SCHEDULE.

NVE ELECTRICAL INSTALLATION WILL NOT BE SCHEDULED UNTIL AFTER THE NVE INSPECTOR HAS COMPLETED THE OFFICIAL RELEASE.

METER(S) WILL NOT BE SET UNTIL ALL OF THE FOLLOWING ARE COMPLETE:
- [INSTRUMENT-RATED ONLY] METERING EQUIPMENT HAS BEEN SUBMITTED TO NVE METERING ENGINEER AND APPROVED. (submittals_southern@nvenergy.com)
- APPLICATION FOR METER SET HAS BEEN SUBMITTED TO NVE'S NEW DEVELOPMENT CENTER. FORM AVAILABLE AT: www.nvenergy.com/brochures_arch/new_construction/meter_set.pdf
- THE LOCAL BUILDING AUTHORITY HAS INSPECTED AND APPROVED THE METERING EQUIPMENT.
- METERING EQUIPMENT IS ACCESSIBLE AND CLEARLY IDENTIFIED WITH PERMANENT MARKINGS. ADDRESSES, SUITE NUMBERS, AND STREET SIGNS ARE POSTED IN PERMANENT LOCATIONS (SEE RPI-G).

TRACK PROJECT STATUS ONLINE WITH NVE'S DEVELOPER DASHBOARD: www.nvenergy.com/business/newconstruction/newconstructionS/developerdashboard.cfm

NOTE:

NPC FACILITIES (SUBSTRUCTURES) ARE NOT TO BE WITHIN 10' OF STREET LIGHT BASES, AND NPC CONDUITS ARE NOT TO CONFLICT WITH STREET LIGHT BASES

CUSTOMER NOTE:

UNLESS OTHERWISE NOTED, ALL CONDUIT, BENDS AND SUBSTRUCTURES ARE THE RESPONSIBILITY OF THE CUSTOMERS CONTRACTOR, OR ASSIGNED DCA CONTRACTOR (RESIDENTIAL ONLY)

RTC NOTES:

BACKFILL AND RIGHT OF WAY RESTORATION SHALL CONFORM TO CLARK COUNTY UNIFORM STANDARD DRAWINGS

1	500.1	0 TO 5 YEARS PAVEMENT RESTORATION LONGITUDINAL CUT
2	500.2	0 TO 5 YEARS PAVEMENT RESTORATION TRANSVERSE CUT
3	500.3	OVER 5 YEARS PAVEMENT RESTORATION LONGITUDINAL CUT. GREATER THAN 60' R.O.W
4	500.4	OVER 5 YRS PAVEMENT RESTORATION LONGITUDINAL CUT. 60' R.O.W OR LESS
5	500.5	OVER 5 YRS PAVEMENT RESTORATION TRANSVERSE ALL R.O.W WIDTHS
6	501	TYPICAL UNDERGROUND UTILITY LOCATIONS IN RESIDENTIAL STREETS 60' OR LESS R.O.W.
7	501.1	TYPICAL UTILITY UNDERGROUND LOCATIONS IN STREETS WITH GREATER THAN 60' R.O.W.
8	503	METHOD B FOR RIGID AND FLEXIBLE PIPE TRENCH BACKFILL – PAVED AREAS
9	503.1	METHOD A FOR FLEXIBLE PIPE TRENCH BACKFILL – PAVED AREAS
11	BACKFILL IN UNPAVED AREA AS REQUIRED BY LOCAL CODE OR AS APPROVED BY AGENCY.	
12	234	SIDEWALK
13	506	UTILITY POTHOLE REPAIR
14	216	"L" TYPE CURB AND GUTTER

FIRE HYDRANT CLEARANCE:

6' RADIUS FROM CENTER OF HYDRANT TO ALL ABOVE GROUND PADS AND/OR EQUIPMENT AND ALL MANHOLES AND SWITCHBOXES.
6' RADIUS FROM CENTER OF HYDRANT TO ALL UNDERGROUND HANDHOLES, PULLBOXES AND SPLICEBOXES. ALL PER NVEnergy STD. RS-5

NOTE: ALL THE ABOVE GROUND UTILITY APPURTENANCES SHALL CONFORM TO THE REQUIREMENTS OF CLV UNIFIED DEVELOPMENT CODE TITLE 19.06 AND 19.08

APPROVED FOR CONSTRUCTION

THIS APPROVAL IS FOR WORK IN CLV R/W & EASEMENT ONLY. OBTAINING PERMISSIONS OR EASEMENTS FOR WORK SHOWN ON PRIVATE PROPERTY IS THE RESPONSIBILITY OF THE UTILITY.

APPROVAL BY: L18-00137-U002 10N/7299-PWR DATE 6 4 18

CITY OF LAS VEGAS
PERMIT REQUIRED*

CONTACT CLV LAND DEVELOPMENT (229-6371)
CLV CONSTRUCTION SERVICES MUST BE NOTIFIED 24 HOURS PRIOR TO COMMENCING CONSTRUCTION (229-6337)

HANSEN______________

DATE__________

*NVE INSPECTOR MUST BE NOTIFIED BY FAX 48 HOURS PRIOR TO COMMENCING CONSTRUCTION & WILL VERIFY CITY PERMIT FOR WORK DONE IN STREETS OR SIDEWALK.
FAX PERMIT TO:
LAS VEGAS NORTH (RYAN CENTER): 402-4354
LAS VEGAS SOUTH (BELTWAY CENTER): 402-6864

EXHIBIT 'A'

NVEnergy INFORMATION:

COORDINATOR: LOCKE, MARY
PHONE: 702-281-5923
DESIGNER: YOSEF, NEAL D.F. J.M.
DCA: N/A
INSPECTOR: 402-3008
STAND BY: 402-4114, 402-4117,402-4118
DISTRICT: LAS VEGAS NORTH

JPA INFORMATION:

JPA ADMIN PHONE: N/A JPA#: N/A

CUSTOMER INFORMATION:

APPLICANT: CLARK COUNTY SCHOOL DISTRICT
ENGINEER: CHRISTOPHER SAMPSON
CONTACT: JOHNY CORONA ** 702-799-8710
APPROVAL DATE: 02/06/2018

GOVERNMENT INFORMATION:

AGENCY: CITY OF LAS VEGAS
APPROVAL DATE:

FOR EACH SERVICE POINT (POINT OF DELIVERY), ENERGY FOR EACH TENANT SPACE WILL BE MEASURED THROUGH ONE WATTHOUR METER. ENERGY FOR ALL NON-TENANT SPACE WILL BE MEASURED THROUGH ONE WATTHOUR METER. CONTACT NVE METER OPERATIONS FOR MULTIPLE RATE CLASS INSTALLATIONS.

NVEnergy

CCSD DETWILER ELEMENTARY SCHOOL ADDITION SIMMONS / CORAN

PROJ. ID: 3002099365	SCALE: 1" = 30'
SHEET # 1 OF 2	DATE: 01/05/2018

2/13/2018 8:52 AM ny29922

L18-00137-U002 5/31/18

Sharing of this drawing and the information contained herein shall be only to individuals/parties who have entered into an agreement with Applicant for the completion of work associated with this specific project. Use for purposes other than this specific project requires the written consent of NV Energy.

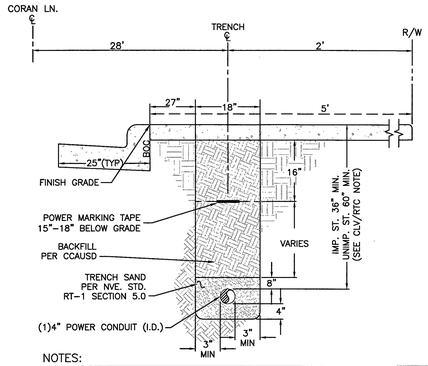

NOTES:

CLV REQUIREMENTS (APPLICABLE WITHIN CITY OF LAS VEGAS LIMITS ONLY):
IMPROVED AREA (IMP. ST.): (LOCATION OF TRENCH)
AREA WILL BE CONSIDERED IMPROVED IF IT MEETS ONE OR MORE OF THE FOLLOWING CRITERIA(S).
- EXISTING PERMANENT PAVEMENT WITH CURB & GUTTER AND/OR ADJACENT PERMANENT SIDEWALK.
- WITHIN AN IMPROVED TRAIL AREA.
- LIMITS OF CONSTRUCTION INSTALLED CONCURRENT WITH A PRIVATE OR PUBLIC PROJECT.

UNIMPROVED AREA (UNIMP. ST.): (LOCATION OF TRENCH)
ANY OTHER SCENARIO THAT FAILS TO MEET THE IMPROVED AREA CRITERIA(S) WILL BE CONSIDERED AN UNIMPROVED AREA.
NVE REQUIREMENTS:
FOR ALL OTHER JURISDICTIONS REFER TO NVE STANDARDS.
BACKFILL REQUIREMENTS NVE. STD. RT–1.
TRENCH DEPTH REQUIREMENTS NVE. STD. RT–5.

TRENCH DETAIL
1–4" CONDUITS
SECTION "AA"

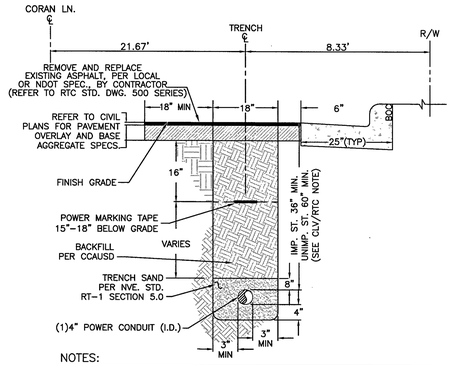

NOTES:

CLV REQUIREMENTS (APPLICABLE WITHIN CITY OF LAS VEGAS LIMITS ONLY):
IMPROVED AREA (IMP. ST.): (LOCATION OF TRENCH)
AREA WILL BE CONSIDERED IMPROVED IF IT MEETS ONE OR MORE OF THE FOLLOWING CRITERIA(S).
- EXISTING PERMANENT PAVEMENT WITH CURB & GUTTER AND/OR ADJACENT PERMANENT SIDEWALK.
- WITHIN AN IMPROVED TRAIL AREA.
- LIMITS OF CONSTRUCTION INSTALLED CONCURRENT WITH A PRIVATE OR PUBLIC PROJECT.

UNIMPROVED AREA (UNIMP. ST.): (LOCATION OF TRENCH)
ANY OTHER SCENARIO THAT FAILS TO MEET THE IMPROVED AREA CRITERIA(S) WILL BE CONSIDERED AN UNIMPROVED AREA.
NVE REQUIREMENTS:
FOR ALL OTHER JURISDICTIONS REFER TO NVE STANDARDS.
BACKFILL REQUIREMENTS NVE. STD. RT–1.
TRENCH DEPTH REQUIREMENTS NVE. STD. RT–5.

TRENCH DETAIL
1–4" CONDUITS
SECTION "BB"

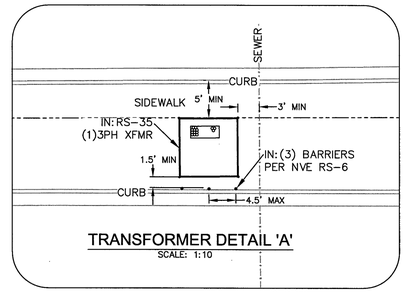

TRANSFORMER DETAIL 'A'
SCALE: 1:10

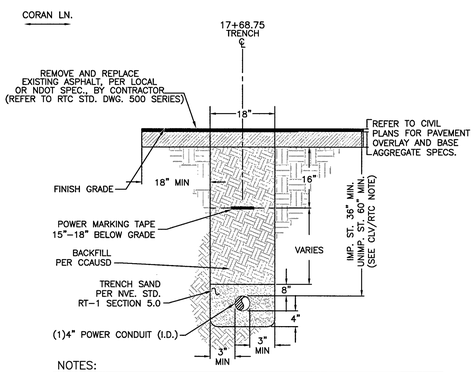

NOTES:

CLV REQUIREMENTS (APPLICABLE WITHIN CITY OF LAS VEGAS LIMITS ONLY):
IMPROVED AREA (IMP. ST.): (LOCATION OF TRENCH)
AREA WILL BE CONSIDERED IMPROVED IF IT MEETS ONE OR MORE OF THE FOLLOWING CRITERIA(S).
- EXISTING PERMANENT PAVEMENT WITH CURB & GUTTER AND/OR ADJACENT PERMANENT SIDEWALK.
- WITHIN AN IMPROVED TRAIL AREA.
- LIMITS OF CONSTRUCTION INSTALLED CONCURRENT WITH A PRIVATE OR PUBLIC PROJECT.

UNIMPROVED AREA (UNIMP. ST.): (LOCATION OF TRENCH)
ANY OTHER SCENARIO THAT FAILS TO MEET THE IMPROVED AREA CRITERIA(S) WILL BE CONSIDERED AN UNIMPROVED AREA.
NVE REQUIREMENTS:
FOR ALL OTHER JURISDICTIONS REFER TO NVE STANDARDS.
BACKFILL REQUIREMENTS NVE. STD. RT–1.
TRENCH DEPTH REQUIREMENTS NVE. STD. RT–5.

TRENCH DETAIL
1–4" CONDUITS
SECTION "CC"

NV ENERGY SCHEDULING NOTE: DAY (LANE BLOCKS)

THIS PROJECT WAS ESTIMATED WITH THE ASSUMPTION THAT ALL THE WORK BEING PERFORMED ON THIS PROJECT BY NV ENERGY CREWS CAN BE DONE DURING THE DAYTIME AND WILL REQUIRE TRAFFIC CONTROL.

GOVERNMENT APPROVAL OF THESE DRAWINGS DOES NOT INDICATE APPROVAL OF TRAFFIC CONTROL. PLEASE REFER TO THE BARRICADE PLAN FOR APPROVED TRAFFIC CONTROL REQUIREMENTS.

NVE STANDARDS

N

T,R,S: 20–61–20
APN: 13920301016
13920301002

CENTERLINE STATION TABLE

#	STREET INTERSECTION	STA	HEADED
A	CORAN LN.	10+00	EAST
	FERRELL LN.	10+00	NORTH
B	CORAN LN.	23+27.60	EAST
	SIMMONS ST.	10+00	NORTH

STATION TABLE

MAXIMO STATION	CORNER	CENTER LINE STATION	SIDE	OFFSET CL TO BOC	OFFSET CL TO ROW	OFFSET CL TO CLOSEST EDGE OF SUBSTRUCTURE	SUBSTRUCTURE INFORMATION
(0005)	EAST	18+07.56 FIELD NOTES:	LT	25'	30'	25.67'	RS–82 – 7.67' X 3.67' OPERATING NUMBER: UGM98526 PAGE NUMBER: 2
	WEST	18+15.23 FIELD NOTES:	LT	25'	30'	25.67'	EASEMENT NUMBER: FUTURE TYP. EASEMENT LAYOUT: FUTURE
(0003)	EAST	17+68.75 FIELD NOTES:	RT	25'	30'	30'	RS–35 – 8.25' X 8.25' OPERATING NUMBER: PM421886 PAGE NUMBER: 2
	WEST	17+60.50 FIELD NOTES:	RT	25'	30'	30'	EASEMENT NUMBER: FUTURE TYP. EASEMENT LAYOUT: FUTURE

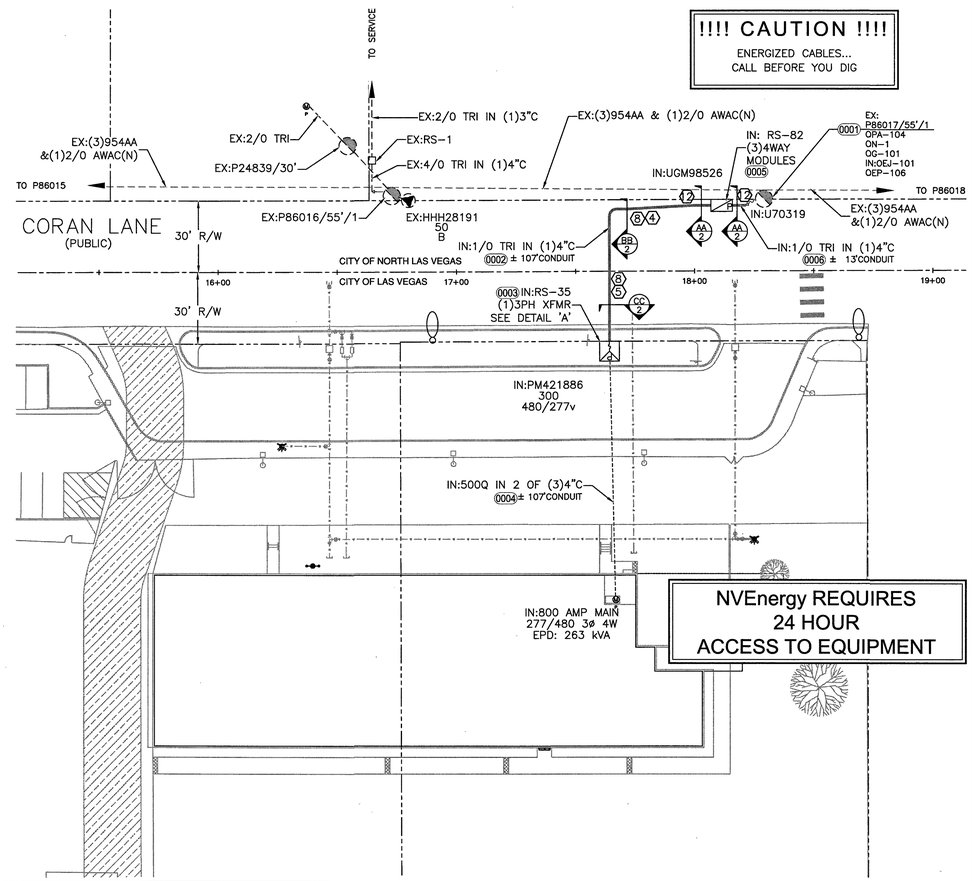

RTC NOTES:

BACKFILL AND RIGHT OF WAY RESTORATION SHALL CONFORM TO CLARK COUNTY UNIFORM STANDARD DRAWINGS

1	500.1	0 TO 5 YEARS PAVEMENT RESTORATION LONGITUDINAL CUT
2	500.2	0 TO 5 YEARS PAVEMENT RESTORATION TRANSVERSE CUT
3	500.3	OVER 5 YEARS PAVEMENT RESTORATION LONGITUDINAL CUT. GREATER THAN 60' R.O.W
4	500.4	OVER 5 YRS PAVEMENT RESTORATION LONGITUDINAL CUT. 60' R.O.W OR LESS
5	500.5	OVER 5 YRS PAVEMENT RESTORATION TRANSVERSE ALL R.O.W WIDTHS
6	501	TYPICAL UNDERGROUND UTILITY LOCATIONS IN RESIDENTIAL STREETS 60' OR LESS R.O.W.
7	501.1	TYPICAL UTILITY UNDERGROUND LOCATIONS IN STREETS WITH GREATER THAN 60' R.O.W.
8	503	METHOD B FOR RIGID AND FLEXIBLE PIPE TRENCH BACKFILL – PAVED AREAS
9	503.1	METHOD A FOR FLEXIBLE PIPE TRENCH BACKFILL – PAVED AREAS
11	BACKFILL IN UNPAVED AREA AS REQUIRED BY LOCAL CODE OR AS APPROVED BY AGENCY.	
12	234	SIDEWALK
13	506	UTILITY POTHOLE REPAIR
14	216	"L" TYPE CURB AND GUTTER

NOTE: ALL THE ABOVE GROUND UTILITY APPURTENANCES SHALL CONFORM TO THE REQUIREMENTS OF CLV UNIFIED DEVELOPMENT CODE TITLE 19.06 AND 19.08

APPROVED FOR CONSTRUCTION

THIS APPROVAL IS FOR WORK IN CLV R/W & EASEMENT ONLY. OBTAINING PERMISSIONS OR EASEMENTS FOR WORK SHOWN ON PRIVATE PROPERTY IS THE RESPONSIBILITY OF THE UTILITY.

APPROVAL BY: DATE

CITY OF LAS VEGAS
PERMIT REQUIRED*

CONTACT CLV LAND DEVELOPMENT (229–6371)
CLV CONSTRUCTION SERVICES MUST BE NOTIFIED 24 HOURS PRIOR TO COMMENCING CONSTRUCTION (229–6337)

HANSEN_____

DATE_____

*NVE INSPECTOR MUST BE NOTIFIED BY FAX 48 HOURS PRIOR TO COMMENCING CONSTRUCTION & WILL VERIFY CITY PERMIT FOR WORK DONE IN STREETS OR SIDEWALK.
FAX PERMIT TO:
LAS VEGAS NORTH (RYAN CENTER): 402–4354
LAS VEGAS SOUTH (BELTWAY CENTER): 402–6864

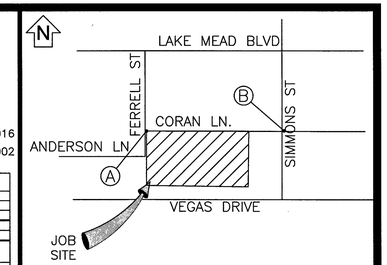

VICINITY MAP
(NOT TO SCALE)

EVERY EFFORT HAS BEEN MADE TO IDENTIFY ALL NVE FACILITIES. THE CUSTOMER SHALL CONFIRM THE EXISTENCE AND LOCATION OF THESE FACILITIES.

AVOID HITTING OVERHEAD POWER LINES. IT'S COSTLY.

CALL 1-702-402-2929

Call before you Dig
Avoid cutting underground utility lines. It's costly.
CALL 811
OR
1-800-227-2600
AND CLARK COUNTY TRAFFIC OPERATIONS
1-702-455-6000

REVISIONS

NO.	DESCRIPTION	DATE	G.A.

STANDARD

PROJECT PURPOSE:

PROVIDE 277/480V 3Ø SERVICE TO (1)800A METER TO NEW SCHOOL ADDITION.

EXHIBIT 'A'

NVEnergy INFORMATION:
COORDINATOR: LOCKE, MARY
PHONE: 702–281–5923
DESIGNER: YOSEF, NEAL D.F. J.M.
DCA: N/A
INSPECTOR: 402–3008
STAND BY: 402–4114, 402–4117,402–4118
DISTRICT: LAS VEGAS NORTH

JPA INFORMATION:
JPA ADMIN PHONE: N/A JPA#: N/A

CUSTOMER INFORMATION:
APPLICANT: CLARK COUNTY SCHOOL DISTRICT
ENGINEER: CHRISTOPHER SAMPSON
CONTACT: JOHNY CORONA ** 702–799–8710
APPROVAL DATE: 02/06/2018

GOVERNMENT INFORMATION:
AGENCY: CITY OF LAS VEGAS
APPROVAL DATE:

FOR EACH SERVICE POINT (POINT OF DELIVERY), ENERGY FOR EACH TENANT SPACE WILL BE MEASURED THROUGH ONE WATTHOUR METER. ENERGY FOR ALL NON-TENANT SPACE WILL BE MEASURED THROUGH ONE WATTHOUR METER. CONTACT NVE METER OPERATIONS FOR MULTIPLE RATE CLASS INSTALLATIONS.

NVEnergy

ry29922

CCSD DETWILER ELEMENTARY SCHOOL ADDITION SIMMONS / CORAN

PROJ. ID: 3002099365	SCALE: 1" = 30'
SHEET # 2 OF 2	DATE: 01/05/2018

2/13/2018 8:52 AM

Sharing of this drawing and the information contained herein shall be only to individuals/parties who have entered into an agreement with Applicant for the completion of work associated with this specific project. Use for purposes other than this specific project requires the written consent of NV Energy.