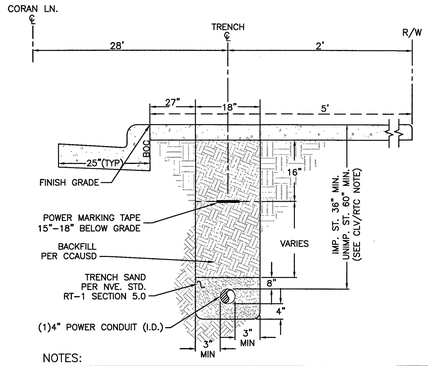

NOTES:

CLV REQUIREMENTS (APPLICABLE WITHIN CITY OF LAS VEGAS LIMITS ONLY):
IMPROVED AREA (IMP. ST.): (LOCATION OF TRENCH)
AREA WILL BE CONSIDERED IMPROVED IF IT MEETS ONE OR MORE OF THE FOLLOWING CRITERIA(S).
- EXISTING PERMANENT PAVEMENT WITH CURB & GUTTER AND/OR ADJACENT PERMANENT SIDEWALK.
- WITHIN AN IMPROVED TRAIL AREA.
- LIMITS OF CONSTRUCTION INSTALLED CONCURRENT WITH A PRIVATE OR PUBLIC PROJECT.

UNIMPROVED AREA (UNIMP. ST.): (LOCATION OF TRENCH)
ANY OTHER SCENARIO THAT FAILS TO MEET THE IMPROVED AREA CRITERIA(S) WILL BE CONSIDERED AN UNIMPROVED AREA.
NVE REQUIREMENTS:
FOR ALL OTHER JURISDICTIONS REFER TO NVE STANDARDS.
BACKFILL REQUIREMENTS NVE. STD. RT–1.
TRENCH DEPTH REQUIREMENTS NVE. STD. RT–5.

TRENCH DETAIL
1–4" CONDUITS
SECTION "AA"

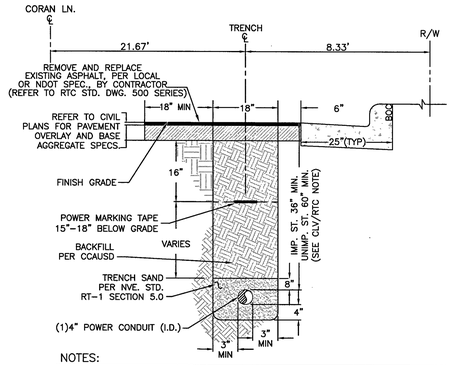

NOTES:

CLV REQUIREMENTS (APPLICABLE WITHIN CITY OF LAS VEGAS LIMITS ONLY):
IMPROVED AREA (IMP. ST.): (LOCATION OF TRENCH)
AREA WILL BE CONSIDERED IMPROVED IF IT MEETS ONE OR MORE OF THE FOLLOWING CRITERIA(S).
- EXISTING PERMANENT PAVEMENT WITH CURB & GUTTER AND/OR ADJACENT PERMANENT SIDEWALK.
- WITHIN AN IMPROVED TRAIL AREA.
- LIMITS OF CONSTRUCTION INSTALLED CONCURRENT WITH A PRIVATE OR PUBLIC PROJECT.

UNIMPROVED AREA (UNIMP. ST.): (LOCATION OF TRENCH)
ANY OTHER SCENARIO THAT FAILS TO MEET THE IMPROVED AREA CRITERIA(S) WILL BE CONSIDERED AN UNIMPROVED AREA.
NVE REQUIREMENTS:
FOR ALL OTHER JURISDICTIONS REFER TO NVE STANDARDS.
BACKFILL REQUIREMENTS NVE. STD. RT–1.
TRENCH DEPTH REQUIREMENTS NVE. STD. RT–5.

TRENCH DETAIL
1–4" CONDUITS
SECTION "BB"

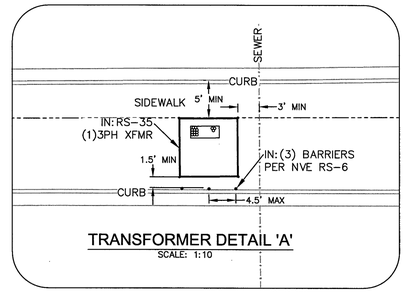

TRANSFORMER DETAIL 'A'
SCALE: 1:10

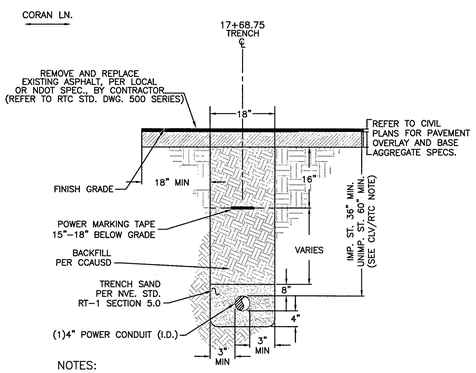

NOTES:

CLV REQUIREMENTS (APPLICABLE WITHIN CITY OF LAS VEGAS LIMITS ONLY):
IMPROVED AREA (IMP. ST.): (LOCATION OF TRENCH)
AREA WILL BE CONSIDERED IMPROVED IF IT MEETS ONE OR MORE OF THE FOLLOWING CRITERIA(S).
- EXISTING PERMANENT PAVEMENT WITH CURB & GUTTER AND/OR ADJACENT PERMANENT SIDEWALK.
- WITHIN AN IMPROVED TRAIL AREA.
- LIMITS OF CONSTRUCTION INSTALLED CONCURRENT WITH A PRIVATE OR PUBLIC PROJECT.

UNIMPROVED AREA (UNIMP. ST.): (LOCATION OF TRENCH)
ANY OTHER SCENARIO THAT FAILS TO MEET THE IMPROVED AREA CRITERIA(S) WILL BE CONSIDERED AN UNIMPROVED AREA.
NVE REQUIREMENTS:
FOR ALL OTHER JURISDICTIONS REFER TO NVE STANDARDS.
BACKFILL REQUIREMENTS NVE. STD. RT–1.
TRENCH DEPTH REQUIREMENTS NVE. STD. RT–5.

TRENCH DETAIL
1–4" CONDUITS
SECTION "CC"

NV ENERGY SCHEDULING NOTE: DAY (LANE BLOCKS)

THIS PROJECT WAS ESTIMATED WITH THE ASSUMPTION THAT ALL THE WORK BEING PERFORMED ON THIS PROJECT BY NV ENERGY CREWS CAN BE DONE DURING THE DAYTIME AND WILL REQUIRE TRAFFIC CONTROL.

GOVERNMENT APPROVAL OF THESE DRAWINGS DOES NOT INDICATE APPROVAL OF TRAFFIC CONTROL. PLEASE REFER TO THE BARRICADE PLAN FOR APPROVED TRAFFIC CONTROL REQUIREMENTS.

NVE STANDARDS

N

T,R,S: 20–61–20
APN: 13920301016
13920301002

CENTERLINE STATION TABLE

#	STREET INTERSECTION	STA	HEADED
A	CORAN LN.	10+00	EAST
	FERRELL LN.	10+00	NORTH
B	CORAN LN.	23+27.60	EAST
	SIMMONS ST.	10+00	NORTH

STATION TABLE

MAXIMO STATION	CORNER	CENTER LINE STATION	SIDE	OFFSET CL TO BOC	OFFSET CL TO ROW	OFFSET CL TO CLOSEST EDGE OF SUBSTRUCTURE	SUBSTRUCTURE INFORMATION
(0005)	EAST	18+07.56 FIELD NOTES:	LT	25'	30'	25.67'	RS–82 – 7.67' X 3.67' OPERATING NUMBER: UGM98526 PAGE NUMBER: 2
	WEST	18+15.23 FIELD NOTES:	LT	25'	30'	25.67'	EASEMENT NUMBER: FUTURE TYP. EASEMENT LAYOUT: FUTURE
(0003)	EAST	17+68.75 FIELD NOTES:	RT	25'	30'	30'	RS–35 – 8.25' X 8.25' OPERATING NUMBER: PM421886 PAGE NUMBER: 2
	WEST	17+60.50 FIELD NOTES:	RT	25'	30'	30'	EASEMENT NUMBER: FUTURE TYP. EASEMENT LAYOUT: FUTURE

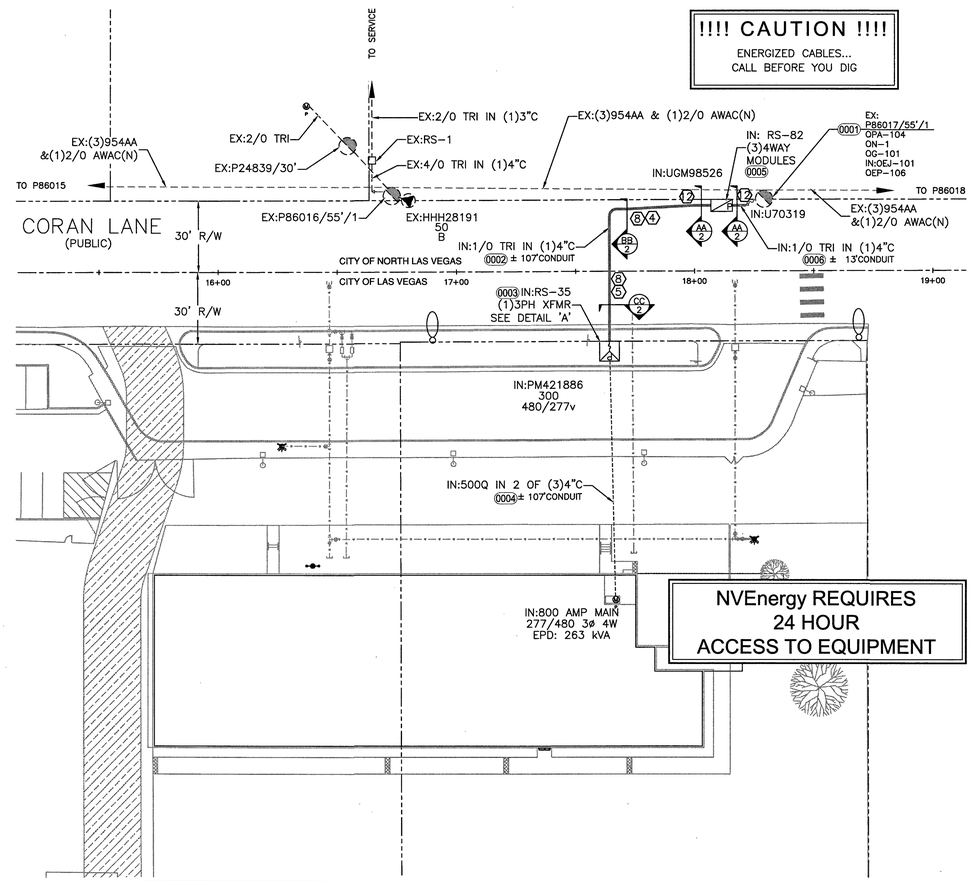

RTC NOTES:

BACKFILL AND RIGHT OF WAY RESTORATION SHALL CONFORM TO CLARK COUNTY UNIFORM STANDARD DRAWINGS

1	500.1	0 TO 5 YEARS PAVEMENT RESTORATION LONGITUDINAL CUT
2	500.2	0 TO 5 YEARS PAVEMENT RESTORATION TRANSVERSE CUT
3	500.3	OVER 5 YEARS PAVEMENT RESTORATION LONGITUDINAL CUT. GREATER THAN 60' R.O.W
4	500.4	OVER 5 YRS PAVEMENT RESTORATION LONGITUDINAL CUT. 60' R.O.W OR LESS
5	500.5	OVER 5 YRS PAVEMENT RESTORATION TRANSVERSE ALL R.O.W WIDTHS
6	501	TYPICAL UNDERGROUND UTILITY LOCATIONS IN RESIDENTIAL STREETS 60' OR LESS R.O.W.
7	501.1	TYPICAL UTILITY UNDERGROUND LOCATIONS IN STREETS WITH GREATER THAN 60' R.O.W.
8	503	METHOD B FOR RIGID AND FLEXIBLE PIPE TRENCH BACKFILL – PAVED AREAS
9	503.1	METHOD A FOR FLEXIBLE PIPE TRENCH BACKFILL – PAVED AREAS
11	BACKFILL IN UNPAVED AREA AS REQUIRED BY LOCAL CODE OR AS APPROVED BY AGENCY.	
12	234	SIDEWALK
13	506	UTILITY POTHOLE REPAIR
14	216	"L" TYPE CURB AND GUTTER

NOTE: ALL THE ABOVE GROUND UTILITY APPURTENANCES SHALL CONFORM TO THE REQUIREMENTS OF CLV UNIFIED DEVELOPMENT CODE TITLE 19.06 AND 19.08

APPROVED FOR CONSTRUCTION

THIS APPROVAL IS FOR WORK IN CLV R/W & EASEMENT ONLY. OBTAINING PERMISSIONS OR EASEMENTS FOR WORK SHOWN ON PRIVATE PROPERTY IS THE RESPONSIBILITY OF THE UTILITY.

APPROVAL BY: DATE

CITY OF LAS VEGAS
PERMIT REQUIRED*

CONTACT CLV LAND DEVELOPMENT (229–6371)
CLV CONSTRUCTION SERVICES MUST BE NOTIFIED 24 HOURS PRIOR TO COMMENCING CONSTRUCTION (229–6337)

HANSEN_____

DATE_____

*NVE INSPECTOR MUST BE NOTIFIED BY FAX 48 HOURS PRIOR TO COMMENCING CONSTRUCTION & WILL VERIFY CITY PERMIT FOR WORK DONE IN STREETS OR SIDEWALK.
FAX PERMIT TO:
LAS VEGAS NORTH (RYAN CENTER): 402–4354
LAS VEGAS SOUTH (BELTWAY CENTER): 402–6864

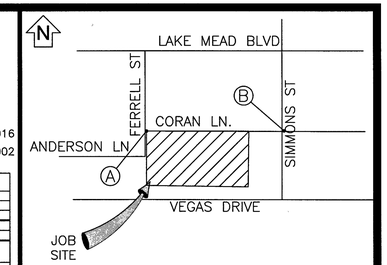

VICINITY MAP
(NOT TO SCALE)

EVERY EFFORT HAS BEEN MADE TO IDENTIFY ALL NVE FACILITIES. THE CUSTOMER SHALL CONFIRM THE EXISTENCE AND LOCATION OF THESE FACILITIES.

AVOID HITTING OVERHEAD POWER LINES. IT'S COSTLY.

CALL 1-702-402-2929

Call before you Dig
Avoid cutting underground utility lines. It's costly.
CALL 811
OR
1-800-227-2600
AND CLARK COUNTY TRAFFIC OPERATIONS
1-702-455-6000

REVISIONS

NO.	DESCRIPTION	DATE	G.A.

STANDARD

PROJECT PURPOSE:

PROVIDE 277/480V 3Ø SERVICE TO (1)800A METER TO NEW SCHOOL ADDITION.

EXHIBIT 'A'

NVEnergy INFORMATION:
COORDINATOR: LOCKE, MARY
PHONE: 702–281–5923
DESIGNER: YOSEF, NEAL D.F. J.M.
DCA: N/A
INSPECTOR: 402–3008
STAND BY: 402–4114, 402–4117,402–4118
DISTRICT: LAS VEGAS NORTH

JPA INFORMATION:
JPA ADMIN PHONE: N/A JPA#: N/A

CUSTOMER INFORMATION:
APPLICANT: CLARK COUNTY SCHOOL DISTRICT
ENGINEER: CHRISTOPHER SAMPSON
CONTACT: JOHNY CORONA ** 702–799–8710
APPROVAL DATE: 02/06/2018

GOVERNMENT INFORMATION:
AGENCY: CITY OF LAS VEGAS
APPROVAL DATE:

FOR EACH SERVICE POINT (POINT OF DELIVERY), ENERGY FOR EACH TENANT SPACE WILL BE MEASURED THROUGH ONE WATTHOUR METER. ENERGY FOR ALL NON-TENANT SPACE WILL BE MEASURED THROUGH ONE WATTHOUR METER. CONTACT NVE METER OPERATIONS FOR MULTIPLE RATE CLASS INSTALLATIONS.

NVEnergy

ry29922

CCSD DETWILER ELEMENTARY SCHOOL ADDITION SIMMONS / CORAN

PROJ. ID: 3002099365	SCALE: 1" = 30'
SHEET # 2 OF 2	DATE: 01/05/2018

2/13/2018 8:52 AM

Sharing of this drawing and the information contained herein shall be only to individuals/parties who have entered into an agreement with Applicant for the completion of work associated with this specific project. Use for purposes other than this specific project requires the written consent of NV Energy.