CITY OF LAS VEGAS STREETLIGHT NOTES

1. ALL STREET LIGHTING INSTALLATIONS SHALL BE IN ACCORDANCE WITH THE STREET LIGHTING PLANS, THE "UNIFORM STANDARD SPECIFICATIONS FOR PUBLIC WORKS CONSTRUCTION OFF-SITE IMPROVEMENTS, CLARK COUNTY AREA, NEVADA", LATEST REVISION, AND THE "UNIFORM STANDARD DRAWINGS FOR PUBLIC WORKS CONSTRUCTION OFF-SITE IMPROVEMENTS, CLARK COUNTY AREA, NEVADA", LATEST REVISION, AND ANY ADOPTED SPECIAL AREA STANDARDS.

2. NO DEVIATION OF STREET LIGHT, PULL BOX, CONDUITS (ETC.) LOCATIONS SHALL BE PERMITTED WITHOUT WRITTEN APPROVAL OF TRAFFIC ENGINEERING AND THE CITY ENGINEER.

3. ALL EXISTING STREET LIGHTING SHALL REMAIN OPERATIONAL DURING CONSTRUCTION.

4. ALL STREET LIGHTING CONDUITS STUB SHALL HAVE AT LEAST ONE GREEN #8 THW WIRE INSTALLED, AS TRACER WIRE. WHEN "EMPTY" CONDUIT IS COMPLETELY INSTALLED FROM PB TO PB, IT SHALL HAVE MINIMUM OF 2 #4 AND 1 #8 THW WIRE WITH THE ENDS TAPED OR "SAFE OFF" PRIOR TO FINAL INSPECTION.

5. ANY STRUCTURE SUCH AS BLOCK WALLS, CHAIN LINK FENCES, RETAINING WALLS, ETC., SHALL LEAVE A MINIMUM CLEARANCE IN ACCORDANCE WITH THE USD NO. 320A.

6. AS-BUILT DRAWINGS SHALL BE SUPPLIED TO THE TEFO PRIOR TO ANY PRE-FINAL INSPECTION. THE ASBUILT DRAWING NEEDS TO BE STAMPED AS-BUILT AND SIGNED BY THE PREPARER.

7. SERVICE POINT SHALL BE COORDINATED WITH NV ENERGY COMPANY, AND WHEREVER POSSIBLE, BE LOCATED NEAR THE CENTER OF THE CIRCUIT. SERVICE POINTS SHALL BE SHOWN ON THE CIVIL PLANS.

8. IT SHALL BE ASSUMED THAT IN THE ABSENCE OF AN EXISTING, WORKABLE CIRCUIT TO ATTACH TO, ALL INSTALLATIONS SHALL REQUIRE A NEW SERVICE FOR OPERATION OF THE CIRCUIT.

9. WHEREVER THERE IS AN OVERHEAD UTILITY THAT MAY CONFLICT WITH THE INSTALLATION OF STREET LIGHTING CIRCUITS AND/OR POLES, THESE CONFLICTS MUST BE RESOLVED BETWEEN THE DEVELOPER AND THE UTILITIES INVOLVED, AT NO EXPENSE TO THE CITY OF LAS VEGAS, BEFORE STREETLIGHT BASES ARE INSTALLED.

10. THE CONTRACTOR SHALL FURNISH COMPLETE SERVICE TO TRANSFORMERS AND CONTROL SYSTEMS IF REQUIRED ON PLANS.

11. THE DEVELOPER/OWNER WILL BE REQUIRED TO SUPPLY POWER TO ALL NEW PUBLIC STREET LIGHTS INSTALLED UNDER THIS DESIGN PRIOR TO BOND RELEASE OR PROJECT COMPLETION. THE DEVELOPER/OWNER WILL BE RESPONSIBLE FOR ALL ITEMS ASSOCIATED WITH THE INSTALLATION, CONSTRUCTION, ENERGIZING, MAINTENANCE AND OPERATIONAL COST OF SAID STREET LIGHTS PRIOR TO PROJECT COMPLETION. REFER TO THE PLAN FOR ANY NEW SERVICE REQUIREMENTS. THE TRANSFER OF OWNERSHIP FROM THE DEVELOPER/OWNER TO THE CITY OF LAS VEGAS FOR ALL NEW PUBLIC STREET LIGHT/S AND/OR SERVICE/S INSTALLED UNDER THIS PLAN DESIGN WILL BE IN CONJUNCTION WITH THIS PROJECT COMPLETION. COORDINATE ALL MAINTENANCE AND OPERATIONAL TRANSFERS WITH THE CITY OF LAS VEGAS TRAFFIC ENGINEERING DEPARTMENT (TEFO) AT (702) 229-6331.

REVISED 04/15/10

CITY OF LAS VEGAS GRADING NOTES

1. IN THE EVENT THAT ANY UNFORESEEN CONDITIONS NOT COVERED BY THESE NOTES ARE ENCOUNTERED DURING GRADING OPERATIONS, THE OWNER/ENGINEER SHALL BE IMMEDIATELY NOTIFIED FOR DIRECTION.

2. IT SHALL BE THE RESPONSIBILITY OF THE CONTRACTOR TO PERFORM ALL NECESSARY CUTS AND FILLS WITHIN THE LIMITS OF THIS PROJECT AND THE RELATED OFF-SITE WORK, SO AS TO GENERATE THE DESIRED SUBGRADE, FINISH GRADES AND SLOPES SHOWN.

3. CONTRACTOR SHALL TAKE FULL RESPONSIBILITY FOR ALL EXCAVATION. ADEQUATE SHORING SHALL BE DESIGNED AND PROVIDED BY THE CONTRACTOR TO PREVENT UNDERMINING OF ANY ADJACENT FEATURES OR FACILITIES AND/OR CAVING OF THE EXCAVATION.

4. THE CONTRACTOR IS WARNED THAT AN EARTHWORK BALANCE WAS NOT NECESSARILY THE INTENT OF THIS PROJECT. ANY ADDITIONAL MATERIAL REQUIRED OR LEFTOVER MATERIAL FOLLOWING EARTHWORK OPERATIONS BECOMES THE RESPONSIBILITY OF THE CONTRACTOR.

5. THE GRADING CONTRACTOR IS RESPONSIBLE TO COORDINATE WITH THE OWNER TO PROVIDE FOR THE REQUIREMENTS OF THE PROJECT STORM WATER POLLUTION PREVENTION PLAN (SWPPP) AND ASSOCIATED PERMIT.

6. CONTRACTOR SHALL GRADE TO THE LINES AND ELEVATIONS SHOWN ON THE PLANS WITHIN THE FOLLOWING HORIZONTAL AND VERTICAL TOLERANCES AND DEGREES OF COMPACTION, IN THE AREAS INDICATED:

	HORIZONTAL	VERTICAL	COMPACTION
A. PAVEMENT AREA SUBGRADE	0.1'+	+0.0' TO -0.1'	SEE SOILS REPORT
B. ENGINEERED FILL	0.5'+	+0.1' TO -0.1'	SEE SOILS REPORT

COMPACTION TESTING WILL BE PERFORMED BY THE OWNER OR HIS REPRESENTATIVE.

7. ALL CUT AND FILL SLOPES SHALL BE PROTECTED UNTIL EFFECTIVE EROSION CONTROL HAS BEEN ESTABLISHED.

8. THE USE OF POTABLE WATER WITHOUT A SPECIAL PERMIT FOR BUILDING OR CONSTRUCTION PURPOSES INCLUDING CONSOLIDATION OF BACKFILL OR DUST CONTROL IS PROHIBITED. THE CONTRACTOR SHALL OBTAIN ALL NECESSARY PERMITS FOR CONSTRUCTION WATER.

9. THE CONTRACTOR SHALL MAINTAIN THE STREETS, SIDEWALKS AND ALL OTHER PUBLIC RIGHT-OF-WAY IN A CLEAN, SAFE AND USABLE CONDITION. ALL SPILLS OF SOIL, ROCK OR CONSTRUCTION DEBRIS SHALL BE PROMPTLY REMOVED FROM THE PUBLICLY OWNED PROPERTY DURING CONSTRUCTION AND UPON COMPLETION OF THE PROJECT. ALL ADJACENT PROPERTY, PRIVATE OR PUBLIC SHALL BE MAINTAINED IN A CLEAN, SAFE AND USABLE CONDITION.

10. IN THE EVENT THAT ANY TEMPORARY CONSTRUCTION ITEM IS REQUIRED THAT IS NOT SHOWN ON THESE DRAWINGS, THE OWNER AGREES TO PROVIDE AND INSTALL SUCH ITEM AT HIS OWN EXPENSE AND AT THE DIRECTION OF THE CITY ENGINEER. TEMPORARY CONSTRUCTION INCLUDES DITCHES, BERMS, ROAD SIGNS AND BARRICADES, ETC.

REVISED 04/15/10

CITY OF LAS VEGAS SEWER NOTES

1. ALL CONSTRUCTION AND MATERIALS SHALL BE IN ACCORDANCE WITH THE LATEST EDITION OF THE DESIGN AND CONSTRUCTION STANDARDS FOR WASTEWATER COLLECTION SYSTEMS AND THE UNIFORM STANDARD SPECIFICATIONS FOR PUBLIC WORKS' CONSTRUCTION OFF-SITE IMPROVEMENTS, CLARK COUNTY AREA, NEVADA, AS AMENDED. IT WILL BE THE RESPONSIBILITY OF THE CONTRACTOR TO BE AWARE OF THE CONTENTS OF THE ABOVE SPECIFICATIONS.

2. IT SHALL BE THE CONTRACTOR'S RESPONSIBILITY TO PERFORM CONSTRUCTION AS PER PLANS. ANY ADDITIONS, DELETIONS, OR CHANGES SHALL FIRST MEET WITH THE APPROVAL OF THE CITY ENGINEER.

3. CHISEL "S" OR "G" IN CURBS WHERE SEWER OR GAS LATERALS PASS UNDER THE CURB.

4. POLYVINYL (PVC) SEWER PIPE SHALL MEET ASTM D-3034 SDR 35 SPECIFICATIONS, INSTALLED WITH SAND BEDDING AND BACKFILL OF TYPE II AGGREGATE BASE.

5. ALL MANHOLES PAVED IN STREETS EIGHTY (80') FOOT R/W AND LARGER SHALL HAVE CONCRETE COLLARS. STREETS LESS THAN EIGHTY (80') FOOT R/W WILL REQUIRE RETROFIT IF PAVING DOES NOT CONFORM TO CITY STANDARDS AT THE MANHOLE.

6. TEE SADDLES SHALL BE USED TO CONNECT SEWER LATERALS TO EXISTING MAIN LINES UP TO TWELVE INCH (12") DIAMETER. CONNECTIONS TO FIFTEEN INCH (15") OR LARGER MAINS SHALL REQUIRE SPECIAL PROCEDURES. IN LINE "Y"S SHALL BE USED ON LINES TWELVE INCHES (12") OR ABOVE.

7. WATER MAINS SHALL BE PROTECTED IN ACCORDANCE WITH LVVWD STANDARDS WHENEVER A SEWER MAIN CROSSES OVER A WATER MAIN OR THE SEWER IS LESS THAN EIGHTEEN INCH (18") UNDER A WATER MAIN.

8. ALL CONTRACTORS INSTALLING SEWER MAINS THAT WILL BE UNDER THE JURISDICTION OF THE CITY OF LAS VEGAS MUST BE STATE OF NEVADA CLASS "A" CONTRACTORS.

9. THE CITY OF LAS VEGAS WILL NOT ACCEPT ANY SEWER MAINS WHICH HAVE A VERTICAL DEFLECTION OF MORE THAN ONE TENTH (0.1) OF A FOOT FROM THE APPROVED CONSTRUCTION PLANS AT ANY LOCATION. SEWER MAINS FOUND TO EXCEED THIS TOLERANCE WILL HAVE TO BE REPAIRED OR REMOVED OR REPLACED TO THE SATISFACTION OF THE CITY ENGINEER PRIOR TO ACCEPTANCE BY THE CITY OF LAS VEGAS.

10. INSTALLATION OF CURVED SEWER REQUIRES THE USE OF C-900 PIPE WHICH ALLOWS FOR PIPE DEFLECTION AT THE JOINTS.

REVISED 04/15/10

CITY OF LAS VEGAS FIRE DEPARTMENT NOTES

1. ALL WORK SHALL BE DONE IN STRICT ACCORDANCE WITH THE LAS VEGAS FIRE & RESCUE ADOPTED FIRE CODE ORDINANCE #6325 FOR HYDRANT SPECIFICATIONS AND HYDRANT INSTALLATION SPECIFICATIONS.

2. ONLY FIRE HYDRANTS THAT ARE ON THE LAS VEGAS VALLEY WATER DISTRICT'S – APPROVED PRODUCTS LIST ARE ALLOWED TO BE INSTALLED.

3. A PERMIT IS REQUIRED FROM LAS VEGAS FIRE & RESCUE FOR THE INSTALLATION OF ON-SITE WATER LINES AND FIRE HYDRANTS. THE PERMIT AND CONTRACTORS MATERIAL TEST CERTIFICATE FOR UNDERGROUND PIPING FORM SHALL BE OBTAINED FROM THE FIRE PROTECTION ENGINEER BEFORE COMMENCEMENT OF WORK. [IFC § 105.7.12]

4. ON ANY RESIDENTIAL OR COMMERCIAL INSTALLATIONS, FIRE HYDRANTS SHALL BE INSTALLED AND FIRE APPARATUS ACCESS ROADS SHALL BE MAINTAINED BEFORE COMMENCEMENT OF ANY COMBUSTIBLE CONSTRUCTION. ALL FIRE HYDRANTS SHALL BE IN GOOD WORKING ORDER AND SHALL BE CAPABLE OF DELIVERING THE REQUIRED FIRE FLOW. [IFC § 3310, § 3312]

5. TO IDENTIFY THE FIRE HYDRANT LOCATIONS, THE CONTRACTOR SHALL PLACE A BLUE REFLECTIVE MARKER AT THE CENTER LINE OF STREET ADJACENT TO THE FIRE HYDRANTS. [IFC § 507.5.7.3]

6. ALL UNDERGROUND INSPECTIONS, PRESSURE AND FLUSH VERIFICATIONS OF ALL FIRE HYDRANTS AND FIRE LINES, SHALL BE CONDUCTED BEFORE COVERING THE LINES. CENTER LOADING IS ACCEPTABLE FOR THE HYDRO TESTS WITH PRIOR FIRE PREVENTION APPROVAL. [IFC § 106.3]

7. ALL ON-SITE UNDERGROUND WATER MAINS AND MATERIALS SHALL BE U.L. LISTED A.W.W.A. APPROVED AND SHALL BE RATED FOR THE APPROPRIATE WORKING PRESSURE. [IFC § 507.2.1, NFPA 24]

8. PAINTING OF CURBS, FIRE HYDRANTS, PADS, PROTECTION OF FIRE HYDRANTS FROM PHYSICAL DAMAGE, AND ALL OTHER WORK NECESSARY PER PLANS SHALL BE COMPLETED BEFORE APPROVAL BY LAS VEGAS FIRE AND RESCUE, FIRE PREVENTION DIVISION. [IFC § 507]

9. PRIVATE HYDRANTS SHALL BE PAINTED RED. [IFC § 507.5.7.1]

10. PRIOR TO THE FINAL OCCUPANCY, A FIRE FLOW TEST SHALL BE WITNESSED BY LAS VEGAS FIRE AND RESCUE, FIRE PREVENTION DIVISION TO VERIFY AVAILABILITY OF THE REQUIRED FIRE FLOW. [IFC § 507]

11. FIRE HYDRANT SPACING SHALL BE AS FOLLOWS: [IFC § C102]
    RESIDENTIAL – 500 FEET UNSPRINKLERED; 600 FEET SPRINKLERED.
    COMMERCIAL – 300 FEET UNSPRINKLERED; 400 FEET SPRINKLERED.

12. WHERE THE WATER MAINS ARE EXTENDED ALONG STREETS OR NEW STREETS ARE INSTALLED WHERE FIRE HYDRANTS ARE NOT NEEDED FOR PROTECTION OF STRUCTURES, FIRE HYDRANTS SHALL BE INSTALLED AT A MAXIMUM OF 1000 FT SPACING, TO PROVIDE FOR TRANSPORTATION HAZARDS. WHERE STREETS ARE PROVIDED WITH MEDIAN DIVIDERS OR HAVE FOUR (4) OR MORE TRAFFIC LANES AND HAVE A TRAFFIC COUNT OF MORE THAN 30,000 PER DAY, HYDRANTS ARE REQUIRED ON EACH SIDE OF THE STREET SPACED AT 500 FT ON AN ALTERNATING BASIS. [IFC § C102.8]

13. NO FIRE HYDRANTS SHALL BE LOCATED WITHIN THE RADIUS OF A CUL-DE-SAC OR WITHIN 20 FT OF THE PERIMETER OF THE RADIUS OF THE CUL-DE-SAC.

14. NO FIRE HYDRANTS SHALL BE LOCATED WITHIN 6 FT OF ANY CURB RETURN, DRIVEWAY, POWER POLE, STREETLIGHT OR ANY OTHER OBSTRUCTION. [IFC § C102.12]

15. A MAXIMUM DISTANCE FROM A FIRE HYDRANT TO A ONE-TWO FAMILY DWELLING SHALL NOT EXCEED 300 FT, AS MEASURED BY AN APPROVED ROUTE. [IFC § C102.4]

16. THE MAXIMUM DISTANCE FROM A FIRE HYDRANT TO A FIRE DEPARTMENT CONNECTION (FDC) SHALL NOT EXCEED 100 FT, AS MEASURED BY AN APPROVED ROUTE. [IFC § C102.7]

17. THE MAXIMUM DISTANCE FROM A HYDRANT TO THE END OF A DEAD-END STREET SHALL NOT EXCEED 200 FT. [IFC § C102.6]

18. TWO (2) SOURCES OF SUPPLY ARE REQUIRED WHENEVER THERE IS 4 OR MORE FIRE HYDRANTS/SPRINKLER LEAD-INS ARE INSTALLED ON A SINGLE SYSTEM. SECTIONAL CONTROL VALVES SHALL BE INSTALLED SO THAT NO MORE THAN 2 FIRE HYDRANTS CAN BE OUT OF SERVICE DUE TO A BREAK IN A WATER MAIN. [IFC § C104]

19. ALL FIRE APPARATUS ACCESS ROADS SHALL BE PAVED TO PROVIDE ALL-WEATHER DRIVING CAPABILITIES, AND SHALL BE DESIGNED AND MAINTAINED TO SUPPORT THE IMPOSED LOADS OF THE FIRE APPARATUS. [IFC § 503.2.3]

20. THE GRADIENT FOR THE FIRE APPARATUS ROADS SHALL NOT EXCEED 12%. ANGLES OF APPROACH AND ANGLES OF DEPARTURE SHALL NOT EXCEED 6% FOR 25 FT PRIOR TO OR AFTER THE GRADE CHANGE. ADJACENT TO THE STRUCTURES GRADIENT SHALL NOT EXCEED 6%. [IFC § 503.2.7, § 503.2.8]

21. THE TURNING RADIUS OF THE FIRE APPARATUS ACCESS ROADS SHALL BE NO LESS THAN 52 FT OUTSIDE AND 28 FT INSIDE TURNING RADIUS. [IFC § 503.2.4]

22. VERTICAL CLEARANCE OF ALL FIRE APPARATUS ACCESS ROADS SHALL NOT BE LESS THAN 13 FT 6 INS. [IFC § 503.2.1]

23. FIRE DEPARTMENT ACCESS ROADS SHALL HAVE A MINIMUM UNOBSTRUCTED WIDTH OF NOT LESS THAN 40 FT FLOW LINE TO FLOW LINE WITH PARALLEL PARKING PERMITTED ON BOTH SIDES. NOT LESS THAN 32 FT WIDE, FLOW-LINE TO FLOW-LINE, WHERE PARKING IS PERMITTED ONLY ON ONE SIDE OF THE FIRE APPARATUS ACCESS ROAD. NOT LESS THAN 24 FT WIDE, FLOW-LINE TO FLOW-LINE, WHERE NO PARKING IS PERMITTED ON EITHER SIDE. FIRE LANES THROUGH PARKING LOTS SHALL NOT BE LESS THAN 24 FT. [IFC § 503.2.1.1]

24. FIRE APPARATUS ACCESS ROAD SHALL BE REQUIRED WHEN ANY PORTION OF AN EXTERIOR WALL OF THE FIRST STORY IS LOCATED MORE THAN 150 FT FROM A FIRE DEPARTMENT VEHICLE ACCESS. THIS DISTANCE COULD BE INCREASED TO 250 FT IF THE BUILDING IS SPRINKLERED. [IFC § 503.1.1]

25. APPROVED SECONDARY FIRE APPARATUS ACCESS SHALL BE PROVIDED FOR 100 OR MORE DWELLING UNITS, ROAD(S) WITH DEAD-ENDS OR WITH A SINGLE POINT OF ACCESS IN EXCESS OF 600 FT. COMMERCIAL AND INDUSTRIAL DEVELOPMENTS WHERE BUILDINGS EXCEED 2 STORIES OR 30 FT IN HEIGHT, OR EXCEEDING 62,000 SQ FT IN AREA. [IFC § 503.1.2]

26. ALL DEAD-END FIRE APPARATUS ROADS AND/OR FIRE LANES, PUBLIC OR PRIVATE, IN EXCESS OF 150 FT IN LENGTH SHALL BE PROVIDED WITH AN APPROVED TURN AROUND HAVING A MINIMUM DIAMETER OF 81 FT. [IFC § 503.2.5]

27. ALL FIRE APPARATUS ACCESS ROADS SHALL BE MARKED BY PLACING APPROVED SIGNS AT THE START OF THE DESIGNATED FIRE LANE, ONE SIGN AT THE END OF THE FIRE LANE AND WITH SIGNS AT INTERVALS OF 100 FT ALONG THE DESIGNATED FIRE LANES. SIGNS TO BE PLACES ON BOTH SIDES OF AN ACCESS ROADWAY IF NEEDED TO PREVENT PARKING ON EITHER SIDE. SIGNS TO BE INSTALLED NO HIGHER THAN 10FT OR LESS THAN 6 FT FROM THE ROADWAY LEVEL. THE CURB ALONG OR ON THE PAVEMENT OR CEMENT (IF NO CURB IS PROVIDED) SHALL BE PAINTED WITH RED WEATHER RESISTANT PAINT IN ADDITION TO THE SIGNS. [IFC § 503.3]

28. ELECTRONICALLY CONTROLLED ACCESS GATES SHALL BE PROVIDED WITH AN APPROVED EMERGENCY VEHICLE DETECTOR/RECEIVER SYSTEM. SAID SYSTEM SHALL BE INSTALLED IN ACCORDANCE WITH THE IFC § 503.6 AND IFC APPENDIX M.

EFFECTIVE DATE 03-01-2016

DEVIATIONS FROM STANDARDS

NONE.

1st Approved 6/14/17

APPROVED FOR CONSTRUCTION 2

LAS VEGAS VALLEY WATER DISTRICT ENGINEERING SERVICES

PROJECT No. 125376 FIRST APPROVED DATE: 5/14/18

CITY OF LAS VEGAS GENERAL NOTES

1. ALL CONSTRUCTION AND MATERIALS SHALL BE IN ACCORDANCE WITH THE "UNIFORM STANDARD SPECIFICATIONS FOR PUBLIC WORKS CONSTRUCTION OFF-SITE IMPROVEMENTS, CLARK COUNTY AREA NEVADA", LATEST ISSUE; THE "UNIFORM STANDARD DRAWINGS FOR PUBLIC WORKS CONSTRUCTION, CLARK COUNTY AREA NEVADA", LATEST REVISED EDITION; THE "SUMMERLIN IMPROVEMENT STANDARDS" FOR WORK IN THE SUMMERLIN AREA; AND OTHER APPLICABLE APPROVED STANDARDS ISSUED BY THE CONTROLLING AGENCY; THE UNIFORM BUILDING CODE; AND ALL LOCAL CITY CODES AND ORDINANCES APPLICABLE, EXCEPT AS NOTED ON THIS SHEET AS "DEVIATIONS FROM STANDARDS".

2. THE EXISTENCE AND LOCATION OF ANY OVERHEAD OR UNDERGROUND UTILITY LINES, PIPES, OR STRUCTURES SHOWN ON THESE PLANS ARE OBTAINED BY A RESEARCH OF THE AVAILABLE RECORDS. EXISTING UTILITIES AS SHOWN FROM CLV PLANS LIBRARY ARE APPROXIMATE AND FOR RECORD PURPOSES. EXISTING UTILITIES ARE LOCATED ON PLANS ONLY FOR THE CONVENIENCE OF THE CONTRACTOR. EXISTING UTILITY SERVICE LATERALS MAY NOT BE SHOWN ON THE PLANS. THE CONTRACTOR SHALL, AT HIS OWN EXPENSE, LOCATE ALL UNDERGROUND AND OVERHEAD INTERFERENCE'S WHICH MAY AFFECT HIS OPERATION DURING CONSTRUCTION AND SHALL TAKE ALL NECESSARY PRECAUTIONS TO AVOID DAMAGE TO SAME. THE CONTRACTOR SHALL USE EXTREME CAUTION WHEN WORKING NEAR OVERHEAD UTILITIES SO AS TO SAFELY PROTECT ALL PERSONNEL AND EQUIPMENT, AND SHALL BE RESPONSIBLE FOR ALL COST AND LIABILITY IN CONNECTION THEREWITH.

3. THE CONTRACTOR SHALL TAKE ALL PRECAUTIONARY MEASURES NECESSARY TO PROTECT EXISTING UTILITY LINES, STRUCTURES AND STREET IMPROVEMENTS WHICH ARE TO REMAIN IN PLACE, FROM DAMAGE, AND ALL SUCH IMPROVEMENTS OR STRUCTURES DAMAGED BY THE CONTRACTOR'S OPERATIONS SHALL BE REPAIRED OR REPLACED SATISFACTORY TO THE CITY ENGINEER AND OWNING UTILITY COMPANY AT THE EXPENSE OF THE CONTRACTOR.

4. ALL CONSTRUCTION SHALL BE AS SHOWN ON THESE PLANS, ANY REVISIONS SHALL HAVE THE PRIOR WRITTEN APPROVAL OF THE CITY ENGINEER.

5. TYPE V CEMENT SHALL BE USED IN ALL OFF-SITE CONCRETE WORK. CONCRETE TO BE 3000 P.S.I. MINIMUM @ 28 DAYS. MIX DESIGNS TO BE APPROVED BY THE CITY, PRIOR TO THE USE ON THE PROJECT.

6. PERMITS ARE REQUIRED FOR ANY WORK IN THE PUBLIC RIGHT-OF-WAY. THE CONTRACTOR SHALL SECURE ALL PERMITS AND INSPECTIONS REQUIRED FOR THIS CONSTRUCTION.

7. EXPANSION JOINTS REQUIRED, MAXIMUM EVERY 300' IN EXTRUDED-TYPE CURB.

8. AC PAVEMENT TO BE ONE-HALF INCH (½") ABOVE LIP OF ALL GUTTERS AFTER COMPACTION, EXCEPT AT SIDEWALK RAMPS AND CROSS GUTTERS.

9. CURB AND GUTTER FOUND TO BE UNACCEPTABLE TO THE CITY OF LAS VEGAS SHALL BE REMOVED AND REPLACED PER STANDARD DRAWING 216.

10. SIDEWALK RAMPS SHALL BE CONSTRUCTED IN EACH QUADRANT OF AN INTERSECTION PER STANDARD DRAWING 235. EXACT LOCATION OF RAMPS MAY BE ADJUSTED IN THE FIELD BY A CITY INSPECTOR.

11. CONTRACTOR SHALL PROVIDE ALL NECESSARY HORIZONTAL AND VERTICAL TRANSITIONS BETWEEN NEW CONSTRUCTION AND EXISTING SURFACES TO PROVIDE FOR PROPER DRAINAGE AND FOR INGRESS AND EGRESS TO NEW CONSTRUCTION. THE EXTENT OF THE TRANSITIONS TO BE AS SHOWN ON PLANS.

12. ALL GRADING WORK SHALL CONFORM TO THE SOILS REPORT AS PREPARED BY THE (COMPANY , _ REPORT #, DATE) APPROVED BY THE CITY ENGINEER, AND AS SHOWN ON THESE PLANS.

13. EXACT LOCATION OF ALL SAWCUT LINES MAY BE ADJUSTED OR DETERMINED IN THE FIELD BY A CITY OF LAS VEGAS ENGINEER IF LOCATION ON PLANS IS NOT CLEARLY SHOWN, OR EXISTING PAVEMENT CONDITION REQUIRES RELOCATIONS.

14. THE CONTRACTOR SHALL TAKE ALL PRECAUTIONS NECESSARY TO PROTECT EXISTING PERMANENT SURVEY MONUMENTS. ANY MONUMENTS DISTURBED SHALL BE REPLACED AND ADJUSTED PER AVAILABLE RECORDS IN ACCORDANCE WITH N.R.S. STATUTE NO. 625.380 & CITY OF LAS VEGAS TITLE 18, APPENDIX D.

15. UTILITY COMPANY METER BOXES, MANHOLE LIDS, VALVE COVERS, ETC., SHALL BE LOCATED OUT OF DRIVEWAYS, DRIVEWAY APRONS, FLOWLINES, AND CROSS GUTTERS UNLESS WRITTEN APPROVAL IS GRANTED BY THE UTILITY COMPANY AND THE CITY ENGINEER.

WALL NOTES:
16. ALL WALLS, NEW OR EXISTING, ARE ONLY SHOWN ON CIVIL PLANS FOR THE PURPOSE OF REVIEWING GRADING RELATIONSHIPS; FLOOD CONTROL AND SIGHT DISTANCE AT INTERSECTIONS. NEW WALLS REQUIRE A SEPARATE PERMIT AND INSPECTION BY THE BUILDING DEPARTMENT.

17. ASPHALT MIX DESIGN MUST BE SUBMITTED AND APPROVED BY THE CITY ENGINEER PRIOR TO THE PLACEMENT OF ASPHALT WITHIN CITY RIGHT OF WAY.

18. CONTRACTOR SHALL ADJUST ALL NEW AND EXISTING INLETS, VALVE BOXES, MANHOLE RIMS, AND SEWER CLEAN OUTS, ETC. TO FINISH GRADE AS APPLICABLE WHETHER OR NOT THEY ARE SHOWN ON THE PLANS.

19. MATERIALS, HANDLING AND PLACEMENT OF PORTLAND CEMENT CONCRETE SHALL BE IN ACCORDANCE WITH APPLICABLE SECTIONS OF NDOT OR THE CLARK COUNTY AREA SPECIFICATIONS (AS APPLICABLE) AND THE PLANS AND DETAILS SHOWN HEREON.

20. WHEN INSTALLING UNDERGROUND FACILITIES THAT REQUIRE UNDERGROUND LOCATING DEVICES SUCH AS MARKER BALLS, LOCATING RIBBON, ETC, THE CONTRACTOR SHALL PROVIDE WRITTEN DOCUMENTATION TO OFFSITE INSPECTION AND TESTING CERTIFYING THAT ALL DEVICES HAVE BEEN PLACED AND VERIFIED TO BE IN GOOD WORKING CONDITION PRIOR TO THE CONSTRUCTION OF ANY ROAD BASE.

21. SANITARY SEWER AND STORM DRAIN FINAL LOCATION MAP(S) SHALL BE PROVIDED TO THE CITY AND APPROVED PRIOR TO ACCEPTANCE OF FACILITY VIDEO INSPECTION. THE MAP(S) SHALL INCLUDE THE HORIZONTAL AND VERTICAL (INVERT) LOCATION OF PUBLIC SEWER MANHOLES, STORM DRAIN MANHOLES AND TRANSITION STRUCTURES, STORM DRAIN LATERALS AT THE CONNECTION TO THE STORM DRAIN MAIN AND AT THE CONNECTION TO A DROP INLET, THE CONNECTION OF SEWER SERVICE LATERALS TO THE SEWER MAIN AND WHERE THE SEWER SERVICE LATERALS EXIT THE PUBLIC RIGHT-OF-WAY, AND STORM DRAIN MAIN ALIGNMENT, INCLUDING DEFLECTION POINTS. THE LOCATION SHALL BE DESCRIBED BY COORDINATES WHICH SHALL BE BASED ON THE OFFICIAL HORIZONTAL AND VERTICAL CONTROL NETWORKS OF THE CITY OF LAS VEGAS. FINAL LOCATION MAPS MUST BE SEALED AND CERTIFIED BY A NEVADA PROFESSIONAL LAND SURVEYOR TO HAVE POSITIONAL CERTAINTIES OF ± 0.09 METERS (± 0.3 FEET) HORIZONTALLY AND VERTICALLY. A SEPARATE ELECTRONIC COMMA DELIMITED FILE FOR THE SANITARY SEWER AND STORM DRAIN COORDINATES SHALL ALSO ACCOMPANY THE SANITARY SEWER AND STORM DRAIN FINAL LOCATION MAP(S).

22. CCTV VIDEO INSPECTION IS REQUIRED FOR ALL SEWER AND STORM DRAINS. THE CCTV VIDEO INSPECTIONS NEED TO BE PERFORMED PER THE DESIGN AND CONSTRUCTION STANDARDS FOR WASTEWATER COLLECTION SYSTEMS LATEST EDITION.

23. A SEPARATE BORING PERMIT IS REQUIRED FOR ALL BORING ACTIVITIES.

REVISED 02/03/15

QUANTITIES

DESCRIPTION	PUBLIC QUANTITIES
5-INCH ASPHALTIC CONCRETE PAVING	2,287 SY
6-INCH ASPHALTIC CONCRETE PAVING	5,394 SY
TYPE II GRAVEL	3,454 CY
CURB & GUTTER "L" CURB	374 LF
CONCRETE CROSS GUTTER	1,792 SF
4-INCH CONCRETE SIDEWALK	2,976 SF
60-INCH SEWER MANHOLES	1 EA
6-INCH DIP WATER MAIN	38 LF
8-INCH WATER MAIN	150 LF
3/4" WATER METER	1 EA
1" WATER METER	2 EA
1-1/2" WATER METER	2 EA
10" COMPACT RPDA	2 EA
10" X 8" TEE	2 EA
10" GATE VALVE	1 EA
8" GATE VALVE	2 EA
POWER SERVICE TO LOTS	4 EA
SIDEWALK UNDERDRAIN	2 EA
PAVEMENT STRIPING ARTERIAL	6,072 LF
TRAFFIC SIGNAL AND/OR BASE	1 EA
TRAFFIC SIGNAL UNDERGROUND	914 LF
TRAFFIC CONTROL DEVICES	8 EA
SURVEY MONUMENTS	1 EA

NOTE:
THIS QUANTITY ESTIMATE IS FOR BONDING PURPOSES ONLY.
CONTRACTOR TO DETERMINE INDEPENDENT ESTIMATIONS.

THE QUANTITY ESTIMATE SHOWN HERE IS FOR EXAMPLE ONLY. ALL DRAFTERS NEED TO CHECK WITH THEIR PROJECT MANAGER BEFORE USING THIS QUANTITY ESTIMATE. SOME PROJECT MANAGERS MAY LIKE IT AND SOME MAY NOT. IT IS NOT REQUIRED IN CLARK COUNTY TO SHOW A QUANTITY ESTIMATE ON THE NOTE SHEET. IT IS MANDATORY, HOWEVER, TO SHOW A QUANTITY ESTIMATE ON THE NOTE SHEET IN CITY OF LAS VEGAS JURISDICTION. IF AND ONLY IF YOUR PROJECT ENGINEER WANTS THE QUANTITY ESTIMATE TO SHOW, THEN CHANGE IT TO THE APPROPRIATE LAYERS ALREADY DEFINED IN THIS DRAWING.

CITY OF LAS VEGAS TRAFFIC NOTES

1. ALL CONSTRUCTION SIGNING, BARRICADING, AND TRAFFIC DELINEATION SHALL CONFORM TO THE "MANUAL ON UNIFORM TRAFFIC CONTROL DEVICES", LATEST EDITION.

2. THE STREET SIGN CONTRACTOR SHALL OBTAIN STREET NAMES AND BLOCK NUMBERING FROM THE PLANNING DEPARTMENT PRIOR TO CONSTRUCTION.

3. BEFORE ANY WORK IS STARTED IN THE RIGHT-OF-WAY, THE CONTRACTOR SHALL INSTALL ALL ADVANCE WARNING SIGNS FOR THE CONSTRUCTION ZONE. THE CONTRACTOR SHALL INSTALL TEMPORARY STOP SIGNS AT ALL NEW STREET ENCROACHMENTS INTO EXISTING CITY STREETS WHERE WARRANTED IMMEDIATELY AFTER FIRST GRADING WORK IS ACCOMPLISHED, AND SHALL MAINTAIN SAID SIGNS UNTIL PERMANENT SIGNS ARE INSTALLED.

4. WHEN A DESIGNATED "SAFE ROUTE TO SCHOOL" IS ENCROACHED UPON BY A CONSTRUCTION WORK ZONE AND PUBLIC WORKS STAFF IDENTIFIES A NEED FOR STUDENTS TO BE ASSISTED IN THE SAFE CROSSING THROUGH THAT WORK ZONE, THE CONTRACTOR SHALL BE REQUIRED TO PROVIDE A QUALIFIED "CROSSING GUARD". THE GUARD SHALL BE PRESENT FOR THE FULL DURATION OF TIME THAT CHILDREN ARE LIKELY TO BE PRESENT.

5. IF THE IMPROVEMENTS NECESSITATE THE OBLITERATION, TEMPORARY OBSTRUCTION, TEMPORARY REMOVAL OR RELOCATION OF ANY EXISTING TRAFFIC PAVEMENT MARKING, SUCH PAVEMENT MARKING SHALL BE RESTORED OR REPLACED WITH LIKE MATERIALS TO THE SATISFACTION OF THE CITY TRAFFIC ENGINEER.

6. THE CONTRACTOR SHALL BE RESPONSIBLE FOR PROVIDING AND INSTALLING ALL PERMANENT SIGNS SHOWN ON THE PLANS. ALL NEW TRAFFIC SIGNS SHALL BE FABRICATED WITH DIAMOND GRADE VIP CLASS 6 REFLECTIVE SHEETING OR APPROVED EQUAL. ALL NEW TRAFFIC SIGNS, EXCEPT STREETNAME AND SCHOOL SPEED LIMIT SIGNS, SHALL HAVE 3M SERIES 1160 OR APPROVED EQUIVALENT ANTI-GRAFFITI PROTECTIVE OVERLAY FILM; SCHOOL ZONE SIGNS SHALL HAVE 3M SERIES 1150 ANTI-GRAFFITI PROTECTIVE OVERLAY FILM. STREET NAME SIGNS SHALL CONFORM IN THEIR ENTIRETY TO CURRENT CITY STANDARDS. ALL OTHER SIGNS SHALL BE STANDARD SIZE UNLESS OTHERWISE SPECIFIED ON THE PLANS. ALL SIGN POSTS SHALL BE INSTALLED IN ACCORDANCE WITH THE CURRENT CITY STANDARDS.

7. WHEN A PROPOSED STREET LIGHT STANDARD IS LOCATED WITHIN FIVE (5') FEET OF ANY PROPOSED SIGN SHOWN ON THE PLANS TO BE MOUNTED ON A SIGNPOST, THE SIGN SHALL BE MOUNTED ON THE STREET LIGHT STANDARD AND THE SIGNPOST SHALL BE ELIMINATED.

8. ALL PERMANENT TRAFFIC CONTROL DEVICES CALLED FOR HEREON SHALL BE IN PLACE AND IN FINAL POSITION PRIOR TO ALLOWING ANY PUBLIC TRAFFIC ONTO THE PORTIONS OF THE ROAD(S) BEING IMPROVED HERE UNDER, REGARDLESS OF THE STATUS OF COMPLETION OF PAVING OR OTHER OFF-SITE IMPROVEMENTS CALLED FOR BY THESE PLANS.

9. STREET SIGNS AND STOPS SIGNS SHALL BE INSTALLED PER CITY STANDARD SPECIFICATIONS FOR PLACEMENT OF STREET NAME SIGNS.

10. THE CONTRACTOR SHALL PROVIDE ALL NECESSARY TRAFFIC CONTROL DEVICES AND FLAGGERS TO INSURE THE SAFETY OF THE PUBLIC IN OR AROUND THE WORK AREA. THE CONTRACTOR SHALL HAVE A CERTIFIED ATSSA TRAFFIC CONTROL TECHNICIAN OR IMSA WORK ZONE SAFETY SPECIALIST SET UP, MAINTAIN AND/OR REMOVE ALL TRAFFIC CONTROL DEVICES IN THE CITY OF LAS VEGAS RIGHT OF WAY.

11. WORK IN PUBLIC STREETS, ONCE BEGUN, SHALL BE EXPEDITED TO COMPLETION SO AS TO PROVIDE MINIMUM INCONVENIENCE TO ADJACENT PROPERTY OWNERS AND TO THE TRAVELING PUBLIC.

12. THE CONTRACTOR SHALL BE RESPONSIBLE FOR NOTIFYING CITIZENS AREA TRANSIT (C.A.T.) IF THE CONSTRUCTION INTERRUPTS OR RELOCATES A BUS STOP OR HAS AN ADVERSE EFFECT ON BUS SERVICE ON THAT STREET TO ARRANGE FOR TEMPORARY RELOCATION OF STOP.

13. GUARDS SHALL BE OBTAINED BY CONTACTING THE METROPOLITAN POLICE DEPARTMENT SPECIAL EVENTS UNIT (PHONE # 828-3442) WHO WILL PROVIDE OFFICERS PROPERLY TRAINED IN TRAFFIC CONTROL. FEES FOR THE USE OF THESE OFFICERS SHALL BE SET BY METRO AND WILL BE PAID BY THE CONTRACTOR. THE CONTRACTOR IS RESPONSIBLE FOR ALL ARRANGEMENTS WITH METRO.

14. ANY WORK WITHIN 300' OF A SIGNALIZED INTERSECTION WILL BE NIGHT WORK, UNLESS OTHERWISE DIRECTED BY THE CITY OF LAS VEGAS TRAFFIC ENGINEER.

15. THE CONTRACTOR SHALL CONTACT THE TRAFFIC ENGINEERING DIVISION (TRANSPORTATION SECTION) THROUGH THE PROJECT'S OFFSITE INSPECTOR PRIOR TO INITIATING PAVING TO RECEIVE DIRECTION FOR ANY PERMANENT OR TEMPORARY MODIFICATIONS TO THE APPROVED DRAWINGS REGARDING FINAL PAVEMENT TRANSITIONS, MARKINGS AND SIGNING THAT ARE REQUIRED TO MATCH ADJACENT ROADWAY SEGMENTS. THE CONTRACTOR SHALL PROVIDE A DRAWING FOR APPROVAL BY THE TRAFFIC ENGINEERING DIVISION DEPICTING ANY ADJUSTMENTS TO THE FINAL PAVEMENT MARKINGS AND SIGNAGE, WHICH MAY INCLUDE OMITTING, ADDING OR MODIFYING PAVEMENT MARKINGS AND TRAFFIC CONTROL SIGNS SUCH THAT ADEQUATE TRANSITIONS AND LANE TERMINATIONS BETWEEN ADJACENT ROADWAY SEGMENTS ARE CONSTRUCTED.

REVISED 04/15/10

LAS VEGAS VALLEY WATER DISTRICT NOTES

LVVWD PROJECT # 125376

1. NO WORK SHALL BEGIN UNTIL THE WATER PLANS HAVE BEEN APPROVED FOR CONSTRUCTION BY THE LVVWD. FOLLOWING WATER PLAN APPROVAL, NOTICE SHALL BE GIVEN TO THE LVVWD COMMUNICATION SUPPORT CENTER (258-7171) TWO (2) WORKING DAYS PRIOR TO THE START OF CONSTRUCTION. FOR FUTURE INSPECTIONS, NOTICE MUST BE GIVEN BY 2:00 P.M. THE BUSINESS DAY PRIOR TO THE REQUESTED LVVWD INSPECTION. WHEN REQUESTING INSPECTIONS, PLEASE REFER TO THE PROJECT # IDENTIFIED ABOVE.
2. ALL WORK SHALL CONFORM TO LVVWD STANDARD PLATES, DRAWINGS, AND SPECIFICATIONS, AND TO THE 2010 EDITION OF THE UNIFORM DESIGN AND CONSTRUCTION STANDARDS FOR POTABLE WATER SYSTEMS (UDACS). THE LATEST EDITION OF UDACS SHALL SUPERCEDE ANY CONFLICTS CONTAINED IN THE APPROVED DRAWINGS AND/OR SPECIFICATIONS.
3. ALL WORK, EXCEPT AS MODIFIED BY THESE PLANS OR BY NOTE 2 ABOVE, SHALL BE DONE IN ACCORDANCE WITH THE MOST RECENT DRAFT OR EDITION OF THE UNIFORM STANDARD SPECIFICATIONS FOR PUBLIC WORKS CONSTRUCTION OFFSITE IMPROVEMENT, CLARK COUNTY AREA.
4. A SINGLE PIPE MATERIAL SHALL BE USED THROUGHOUT THE PROJECT UNLESS OTHERWISE APPROVED BY THE LVVWD.
5. ALL SERVICE LATERALS TWO (2) INCHES IN DIAMETER AND SMALLER SHALL BE TYPE K COPPER TUBING WITH LVVWD APPROVED SERVICE SADDLES.
6. ALL WATER METER BOXES SHALL BE LOCATED OUTSIDE OF DRIVEWAY AREAS.
7. ALL VALVES SHALL BE LOCATED OUTSIDE OF DRIVEWAYS, VALLEY AND CURB GUTTERS.
8. ALL WATER AND STORM DRAIN OR SANITARY SEWER CROSSINGS SHALL CONFORM TO SECTION 2.22 OF THE 2010 EDITION OF THE UDACS.
9. ALL WATER FACILITIES SHALL BE FILLED, DISINFECTED, PRESSURE TESTED, FLUSHED, FILLED, AND AN ACCEPTABLE WATER SAMPLE OBTAINED, PRIOR TO CONNECTION TO THE LVVWD DISTRIBUTION SYSTEM.
10. THE CONTRACTOR MUST OBTAIN ALL METERS TWO (2) INCHES AND SMALLER FROM LVVWD CENTRAL STORES. TELEPHONE 258-3152 OR 258-3802, TWO (2) WORKING DAYS PRIOR TO METER PICKUP.
11. ANY INTERRUPTION OF SERVICE MUST BE PERFORMED IN ACCORDANCE WITH UDACS SECTION 3.14.01, AND APPROVED BY THE LVVWD INSPECTION DIVISION PRIOR TO SHUTDOWN. PROPER WRITTEN NOTIFICATION MUST BE GIVEN TO ALL AFFECTED CUSTOMERS.
12. ALL WATER FACILITY CONSTRUCTION MATERIALS USED MUST BE AS LISTED ON THE LVVWD PRE-APPROVED MATERIALS AND MANUFACTURER'S LISTING FOR NEW FACILITIES, LATEST REVISION, OR SPECIFICALLY APPROVED ON THESE PLANS.
13. TELEPHONE "CALL BEFORE YOU DIG" AT "811" OR 1-800-227-2600.
14. THE INSTALLATION OF LAS VEGAS VALLEY WATER DISTRICT (LVVWD) MUNICIPAL WATER FACILITIES WITHIN ALL STREETS IS ASSUMED TO BE IN COMPLIANCE WITH THE UNIFORM STANDARDS, INCLUDING THE PLACEMENT OF ASPHALT PAVING STREET SURFACES. ANY REPAIR WORK DONE BY THE LVVWD TO THE MUNICIPAL WATER FACILITIES WILL INCLUDE THE PLACEMENT OF AN APPROPRIATELY SIZED ASPHALT REPAIR PATCH ON THE STREET SURFACE.

    ANY DECORATIVE PAVING SURFACE WITHIN THE STREET IS THE RESPONSIBILITY OF THE OWNER'S ASSOCIATION, OR THE INDIVIDUAL PROPERTY OWNERS IF NO OWNER'S ASSOCIATION IS IN EXISTENCE, OR THE AGENCY HAVING JURISDICTION. DECORATIVE SURFACE MATERIALS PLACED WITHIN THE TEN FOOT EASEMENT ABUTTING A PUBLIC OR PRIVATE STREET, IF DISTURBED BY THE LVVWD DURING THE REPAIR OR OPERATION OF ITS FACILITIES, WILL BE REPLACED BY LVVWD WITH AN APPROPRIATELY SIZED PLAIN FINISH CONCRETE PATCH. THE LVVWD WILL NOT RESTORE, AND WILL NOT BE RESPONSIBLE FOR THE RESTORATION OF, ANY DECORATIVE PAVING SURFACE WITHIN THE STREET. THE LVVWD WILL NOT ATTEMPT TO MATCH COLOR OR FINISH OF ANY ADJACENT MATERIALS.
15. NO LEAD COMPLIANCE NOTE:
    TO COMPLY WITH THE FEDERAL SAFE DRINKING WATER ACT, ALL WATER WORKS BRASS PRODUCTS PROPOSED TO BE RELOCATED, OR INSTALLED AS NEW MUST BE INSTALLED WITH THE LEAD FREE APPROVED PRODUCT. THE OLD LEADED PRODUCT MAY NOT BE REUSED.

CLARK COUNTY TRAFFIC NOTES

1. ALL PERMANENT TRAFFIC CONTROL DEVICES CALLED FOR HEREON SHALL BE IN PLACE AND IN FINAL POSITION PRIOR TO ALLOWING ANY PUBLIC TRAFFIC ONTO THE PORTIONS OF THE ROAD(S) BEING IMPROVED HEREUNDER, REGARDLESS OF THE STATUS OF COMPLETION OF PAVING OR OTHER OFF-SITE IMPROVEMENTS CALLED FOR BY THESE PLANS.
2. BEFORE ANY WORK IS STARTED IN THE RIGHT-OF-WAY, THE CONTRACTOR SHALL INSTALL ALL ADVANCE WARNING SIGNS FOR THE CONSTRUCTION ZONE. THE CONTRACTOR SHALL INSTALL TEMPORARY GROUND MOUNTED STOP SIGNS AT ALL NEW STREET ENCROACHMENTS INTO EXISTING COUNTY STREETS IMMEDIATELY AFTER FIRST GRADING WORK IS ACCOMPLISHED AND SHALL MAINTAIN SAID SIGNS UNTIL PERMANENT SIGNS ARE INSTALLED
3. ALL CONSTRUCTION SIGNING, BARRICADING AND PAVEMENT MARKINGS SHALL CONFORM TO THE NEVADA WORK ZONE TRAFFIC CONTROL HANDBOOK – 1986 AND TO THE MANUAL ON UNIFORM TRAFFIC CONTROL DEVICES, CURRENT EDITION.
4. IF THE IMPROVEMENTS NECESSITATE THE OBLITERATION, TEMPORARY OBSTRUCTION, TEMPORARY REMOVAL, OR RELOCATION OF ANY EXISTING TRAFFIC PAVEMENT MARKING, SUCH PAVEMENT MARKING SHALL BE RESTORED OR REPLACED WITH LIKE MATERIALS TO THE SATISFACTION OF THE COUNTY TRAFFIC MANAGER.
5. THE DEVELOPER SHALL BE RESPONSIBLE TO PROVIDE AND INSTALL ALL PERMANENT SIGNS SHOWN ON THE PLANS. STREET NAME SIGNS SHALL CONFORM IN THEIR ENTIRETY TO CLARK COUNTY AREA STANDARDS. ALL OTHER SIGNS SHALL BE STANDARD SIZE UNLESS OTHERWISE SPECIFIED ON THE PLANS. ALL SIGNPOSTS SHALL BE INSTALLED IN ACCORDANCE WITH CLARK COUNTY AREA STANDARDS. ALL SIGNS SHALL USE CLASS VI SHEETING.
6. IF A PROPOSED STREET LIGHT STANDARD IS FIELD LOCATED TO WITHIN FIVE (5) FEET OF ANY SIGN SHOWN HEREON TO BE MOUNTED ON A SIGN POST, CHANGE SIGN MOUNTING TO ONE ON THE STREETLIGHT STANDARD.
7. PRIOR TO CONSTRUCTION, THE STREET SIGN CONTRACTOR SHALL OBTAIN STREET NAMES AND BLOCK NUMBERING FROM THE CURRENT PLANNING DIVISION OF THE DEPARTMENT OF COMPREHENSIVE PLANNING.
8. ALL TRAFFIC SIGNAL POLE ASSEMBLIES, STEEL PEDESTAL FOR CABINETS AND STREET LIGHT POLES SHALL BE GALVANIZED PER ASTM A.123.
9. ALL STREET LIGHTING INSTALLATIONS EXCEPT NOTED ON THE STREET LIGHTING PLANS SHALL CONFORM TO THE UNIFORM STANDARD DRAWINGS AND THE UNIFORM STANDARD SPECIFICATIONS FOR PUBLIC WORKS' CONSTRUCTION OFF-SITE IMPROVEMENTS CLARK COUNTY AREA, NEVADA, LATEST EDITION OF EACH.
10. THE FOLLOWING CLARK COUNTY UNDERGROUND FACILITIES MAY BE LOCATED IN YOUR PROJECT AREA: STREET LIGHTING, TRAFFIC SIGNALS, AND FREEWAY AND ARTERIAL SYSTEM OF TRANSPORTATION (F.A.S.T.) INTERCONNECT CABLE. YOU MUST CONTACT CLARK COUNTY TRAFFIC MANAGEMENT DIVISION, OPERATIONS UNIT AT 455-6000 FOR LOCATIONS AT LEAST 48 HOURS PRIOR TO WORKING IN THE AREA. CLARK COUNTY IS NOT A MEMBER OF "CALL BEFORE YOU DIG" (UNDERGROUND SERVICE ALERT), AND A CALL TO THAT ORGANIZATION DOES NOT RELIEVE YOU OF LIABILITY FOR CLARK COUNTY FACILITIES.
11. F.A.S.T. INTERCONNECT CABLE POLICY IS IN EFFECT. INTERCONNECT CABLE MUST BE MAINTAINED AT ALL TIMES. DEVELOPER/CONTRACTOR SHALL PROVIDE TEMPORARY OVERHEAD INTERCONNECT CABLE WHILE PERMANENT CABLE IS BEING RELOCATED. TEMPORARY AERIAL INSTALLATION MUST BE ACCEPTABLE TO THE COUNTY TRAFFIC MANAGER AND TO F.A.S.T. ANY DAMAGE TO THIS CABLE IS DEEMED AN EMERGENCY BY F.A.S.T., CITY OF LAS VEGAS, CLARK COUNTY AND NDOT AND MUST BE REPAIRED IMMEDIATELY TO F.A.S.T. ACCEPTANCE. $2,500 PER DAY DAMAGES MAY BE ASSESSED AFTER 24 HOURS HAS ELAPSED FROM TIME OF BREAK OR DAMAGE.
12. ALL NEW OR REPLACEMENT TRAFFIC SIGNAL LOOPS SHALL BE INSTALLED USING CABLE-IN-DUCT WIRING, SHALL HAVE INDEPENDENT LEAD-IN WIRES FOR EACH LOOP FROM THE CONTROLLER TO THE PULL-BOX, AND EACH LEAD-IN SHALL BE INDIVIDUALLY TAGGED.
13. TRAFFIC SIGNAL PEDESTRIAN HEADS SHALL BE THE L.E.D. TYPE.
14. ELECTRICAL POWER SERVICE POINT LOCATION(S) FOR STREET LIGHTING AND TRAFFIC SIGNALS MUST BE INDICATED ON THE PLANS. IF CONNECTING TO AN EXISTING CIRCUIT, INDICATE LOCATION OF EXISTING SERVICE POINT FOR EACH CIRCUIT.
15. WHEN STREETLIGHTS ARE TO BE CONNECTED TO AN EXISTING CIRCUIT, THE ENGINEER MUST CERTIFY THAT THE EXISTING CIRCUIT IS CAPABLE OF HANDLING THE ADDITIONAL CIRCUIT LOAD.
16. CLARK COUNTY RESERVES THE RIGHT TO REJECT STREET LIGHT AND TRAFFIC SIGNAL POLES AND ASSEMBLIES WHICH HAVE A "STRIPED" APPEARANCE.
17. TWO WEEKS PRIOR TO BEGINNING OF CONSTRUCTION, MODIFICATION OR RELOCATION OF ANY TRAFFIC SIGNAL SYSTEM, WRITTEN NOTICE SHALL BE SUBMITTED TO THE CLARK COUNTY TRAFFIC MANAGEMENT DIVISION OF THE DATE THAT WORK WILL BEGIN.
18. THREE (3) NORMAL WORKING DAYS PRIOR TO TURN-ON OR COMPLETION OF MODIFICATION(S) TO A TRAFFIC SIGNAL SYSTEM, WRITTEN NOTICE SHALL BE SUBMITTED TO THE CLARK COUNTY TRAFFIC MANAGEMENT DIVISION THAT WORK IS BEING COMPLETED AND THE PROPOSED DATE OF COMPLETION.

CLARK COUNTY DEPARTMENT OF PUBLIC WORKS DEVELOPMENT REVIEW NOTES

1. INSPECTIONS ARE REQUIRED. CALL 24 HOURS IN ADVANCE TO SCHEDULE AT (702)455-4610. PERMIT, APPROVED PLANS, AND BARRICADE PLANS FOR THIS WORK MUST BE ON THE JOB SITE AT ALL TIMES.
2. EXACT LOCATION OF ALL SAW-CUT LINES SHALL BE DETERMINED IN THE FIELD BY THE CLARK COUNTY INSPECTOR.
3. CURB AND GUTTER WITH A GRADE OF LESS THAN 4/10 OF ONE PERCENT SHALL BE CONSTRUCTED BY FORMING. EACH JOINT SHALL BE CHECKED FOR GRADE PRIOR TO CONSTRUCTION AND WATER TESTED AS SOON AS POSSIBLE AFTER CONSTRUCTION.
4. FINAL ASPHALTIC CONCRETE (AC) PAVEMENT SURFACES SHALL BE ONE-HALF (½") INCH ABOVE THE LIP OF THE GUTTER (INCLUDING OPEN GRADE).
5. ALL OFF-SITE IMPROVEMENT CONSTRUCTION SHALL CONFORM TO THE UNIFORM STANDARD SPECIFICATIONS AND STANDARD DRAWINGS CLARK COUNTY AREA NEVADA AND CLARK COUNTY SUPPLEMENT TO UNIFORM STANDARD DRAWINGS AND SPECIFICATIONS, LATEST REVISION EXCEPT FOR LUMINARIES. REFER TO CLARK COUNTY PUBLIC WORKS QUALIFIED PRODUCTS LIST "QPL" FOR LED LUMINARIES. QPL CAN BE FOUND ONLINE AT HTTP://WWW.CLARKCOUNTYNV.GOV/PUBLIC-WORKS/PAGES/DEFAULT.ASPX
6. PRIVATE STREETS, CURB & GUTTER AND VALLEY GUTTERS REFLECTED ON THESE PLANS ARE TO BE INSPECTED BY A CLARK COUNTY INSPECTOR.
7. WHEEL CHAIR RAMPS SHALL BE CONSTRUCTED IN EACH QUADRANT OF AN INTERSECTION PER STANDARD DRAWING 235. EXACT LOCATION OF RAMPS SHALL BE DETERMINED IN THE FIELD BY A CLARK COUNTY PUBLIC WORKS INSPECTOR.
8. PROPER SIGNS, BARRIERS, BARRICADES AND LIGHTS SHALL BE PLACED AND MAINTAINED IN ACCORDANCE WITH THE LATEST "MANUAL ON UNIFORM TRAFFIC CONTROL DEVICES FOR STREETS AND HIGHWAYS" TRAFFIC, SCHOOL, OR STREET SIGNS OF ANY KIND ARE NOT TO BE MOVED FOR ANY REASON WITHOUT FIRST COORDINATING WITH THE DEPARTMENT OF PUBLIC WORKS INSPECTIONS @ (702)455-4610.
9. THIS PLAN DOES NOT AUTHORIZE CLOSURE OF ANY ROAD OR STREET.
10. NO OPEN TRENCH SHALL BE ALLOWED ACROSS ANY STREET OR WITHIN TEN (10') FEET OF ANY TRAVEL-WAY, EXCEPT WHEN WORK IS IN ACTUAL PROGRESS. AREAS COVERED BY ACCEPTABLE STEEL PLATE ARE NOT TO BE CONSTRUED AS A TRENCH. NO OPEN TRENCH IS PERMITTED IN EXCESS OF 500 FEET OR LENGTH NECESSARY TO ACCOMMODATE PIPE INSTALLATION IN A SINGLE DAY, WHICHEVER IS GREATER. ALL TRENCH CROSSINGS AND BACKFILL SHALL MEET THE STANDARD SPECIFICATION UNLESS OTHERWISE STATED.
11. A TEMPORARY PATCH IS TO BE IN PLACE AT THE END OF EACH WORK DAY WHERE THE BACKFILL IN THE TRENCH HAS BEEN COMPLETED AND PRIOR TO OPENING THE WORK AREA BACK TO TRAFFIC AND IS TO BE MAINTAINED BY THE PERMITEE. A PERMANENT PATCH IS TO BE IN PLACE WITHIN THIRTY (30) DAYS AFTER THE INSTALLATION OF THE TEMPORARY PATCH.
12. COMPACTION TESTS ARE REQUIRED.

LEGEND

CL OR SURVEY LINE — PROPERTY LINE — ROW LINE — EASEMENT LINE — SAWCUT LINE — SCARP LINE

DESCRIPTION:	CONTOUR LINES	EDGE OF PAVEMENT	"A" TYPE CURBS	"L" TYPE CURBS	WALLS	FENCES	AC PAVEMENT	CONCRETE	SPOT ELEVATIONS	SIGNS	MANHOLE W/ DESCRIPTION	FIRE HYDRANTS	GATE VALVES	REDUCERS	CLEAN OUTS	UTILITY BOX OR VAULT	BACKWATER VALVES	100w HPS STREETLIGHTS	150w HPS STREETLIGHTS	200w HPS STREETLIGHTS	250w HPS STREETLIGHTS
EXISTING:	(2210)								(12.34) BC		Ⓢ						BWV				
PROPOSED:	(2122)								12.34 BC		Ⓢ						BWV				

MANHOLE DESCRIPTIONS
Ⓢ = SANITARY SEWER
Ⓓ = STORM DRAIN
Ⓔ = ELECTRICAL
Ⓣ = TELEPHONE

4/27/2018 11:11 AM
T:\CAD\161109\Drawings\Plot Drawings\c-161109-notes.dwg

REV.: | DATE: | BY: | DESCRIPTION:

Lochsa engineering
6345 South Jones Blvd.
Suite 100
Las Vegas, NV 89118
Phone (702) 365-9312
Fax (702) 365-9317
www.lochsa.com

SHEET: GENERAL NOTES SHEET

TITLE: DEER SPRINGS AND HUALAPAI CITY OF LAS VEGAS, NEVADA

PROJ #125376 AGR #116293 QS 125-19-NW

PROJECT No.: 161109
DATE: APRIL 27, 2018
SCALE: NTS
DRAWN BY: MGZ
DESIGNED BY: MGZ
CHECKED BY: JLI

SEAL: PROFESSIONAL ENGINEER STATE OF NEVADA — TED T. EGERTON — EXP. 12-31- — CIVIL — No. 11286 — 04/27/2018

10745060 L-69418
SHEET No. C1.02
SHEET 2 OF 15
CLV No. 69418 HTE No. 17-19756

CITY OF LAS VEGAS JURISDICTION | CLARK COUNTY NEVADA JURISDICTION

FOR CONTINUATION SEE SHEET C2.02

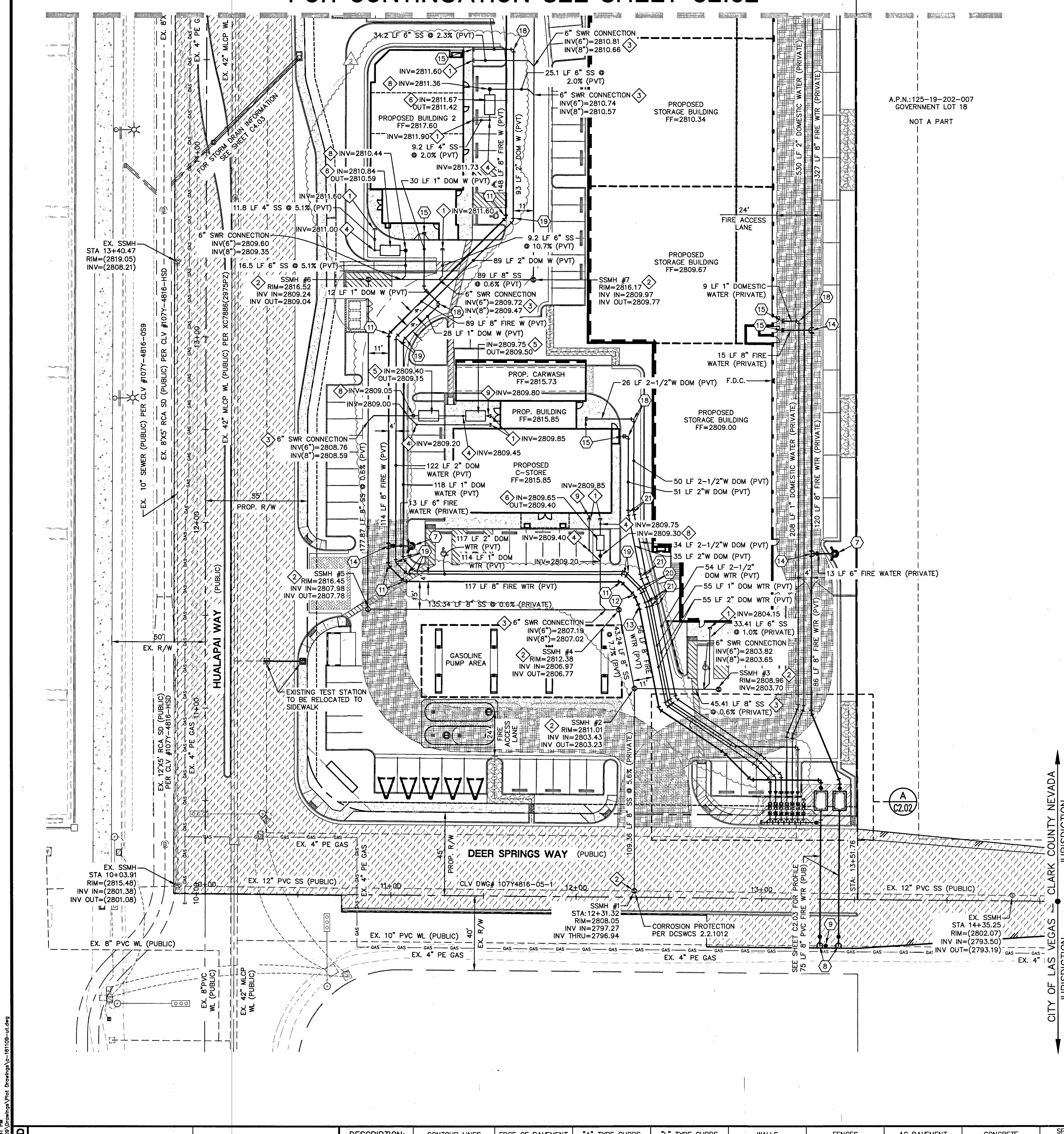

SEWER CONSTRUCTION NOTES:

– NOT ALL NOTES USED ON THIS SHEET –

1. STUB & CAP SANITARY SEWER SERVICE. REFER TO PLUMBING PLANS FOR CONTINUATION.
2. INSTALL 48" SANITARY SEWER MANHOLE & BASE PER DCSWCS DWG. NO. SD-1A & SD-1B, CONCRETE COLLAR PER SD-4, SINGLE COVER 24"
3. INSTALL WYE LATERAL CONNECTION PER DCSWCS DWG. NO. SD-22.
4. INSTALL SEWER CLEAN-OUT PER DCSWCS DWG. NO. SD-26.
5. INSTALL 1500 GALLON SAND/OIL INTERCEPTOR BY OTHERS
6. INSTALL 1500 GALLON GREASE INTERCEPTOR BY OTHERS
7. NOT USED
8. SAMPLE MANHOLE FOR INTERCEPTOR(S) BY OTHERS
9. INSTALL SEWER BACK WATER VALVE.

GRAPHIC SCALE

30 0 15 30 60

(IN FEET)
1 Inch = 30 ft.

FIRE WATER AT DOMESTIC WATER CROSSINGS

ALL NON-POTABLE FIRE WATER LINES CROSSING POTABLE DOMESTIC WATER LINES ARE TO BE INSTALLED WITH "A VERTICAL SEPARATION OF NO LESS THAN SIZ INCHES..." AND IN ACCORDANCE WITH UDACS 2.23.01, 2.04.03, 2.22.02.B1, AND 2.22.02.B2.

WARNING:

WARNING FIRE LINE (NON-POTABLE WATER) ALL EXISTING, RELOCATED OR PROPOSED DCDA/RPDA INSTALLATIONS:

"TO COMPLY WITH THE FEDERAL SAFE DRINKING WATER ACT, THE FIRE LINE OR ANY OF ITS COMPONENTS, SHALL NOT BE USED FOR POTABLE DRINKING WATER AT ANY TIME."

NOTE:

ALL SEWER/STORM DRAINS CROSSING WATER LINES MUST CONFORM TO SECTION 2.22 OF UNIFORM DESIGN AND CONSTRUCTION STANDARD FOR WATER DISTRIBUTION SYSTEMS (UDACS) FOR WATER AND STORM DRAIN CROSSING AND CLEARANCES.

NOTE:

ALL ABOVE GROUND UTILITY SHALL COMPLY WITH TITLE 19.08.010 UTILITY SCREENING REQUIREMENTS, ALL ABOVE GROUND UTILITIES GREATER THAN 27 CUBIC FEET SHALL BE SETBACK A MINIMUM OF 3' FROM THE BACK OF SIDEWALK AND SHALL INCLUDE VEGETATION THAT UPON MATURITY WILL ADEQUATELY SCREEN SUCH EQUIPMENT FROM PUBLIC VIEW.

NOTE:

THE DISTRICT CANNOT GUARANTEE A WATERTIGHT SHUTDOWN WHERE CONNECTIONS OR REPAIRS TO EXISTING FACILITIES ARE REQUIRED. THE CONTRACTOR SHALL ENSURE ALL LABOR AND EQUIPMENT IS AVAILABLE TO REMOVE FUGITIVE WATER THAT MAY IMPEDE CONSTRUCTION AT ALL TIMES. COORDINATION WITH INSPECTION DIVISION MUST TAKE PLACE PRIOR TO ANY TRIAL SHUTDOWN.
CONTRACTOR TO INSTALL TEMPORARY SERVICE TO ENSURE PROPER SHUTDOWN IN THE EVENT NO OTHER APPURTENANCES ARE AVAILABLE.

NOTE:

CONTRACTOR TO INCLUDE COST OF UNDERGROUND UTILITY DETECTION COMPANY TO LOCATE AND MARK ALL EXISTING UTILITIES PRIOR TO ANY DEMOLITION OR EXCAVATION. ENGINEER TO BE PROVIDED WITH AS-BUILT SKETCH OF EXISTING UTILITIES, AND IS TO BE NOTIFIED IMMEDIATELY OF ANY POTENTIAL CONFLICTS WITH PROPOSED UTILITIES AND/OR FINISHED GRADES.

REDUCED PRESSURE DETECTOR ASSEMBLY (RPDA): (2) 10"

THE REDUCED PRESSURE DETECTOR ASSEMBLIES SHALL BE INSTALLED IN ACCORDANCE WITH THE UDACS PLATE NO. 59. NO WATER SHALL BE TAKEN FROM A SERVICE REQUIRING BACKFLOW PREVENTION UNTIL THE ASSEMBLY HAS BEEN SUCCESSFULLY TESTED BY LVVWD. ANY BLOCK WALL OR OTHER FENCE MATERIAL SHALL BE DESIGNED AND CONSTRUCTED AROUND THE OUTSIDE OF THE EASEMENT(S) SO AS TO ALLOW LVVWD DIRECT ACCESS FROM THE ADJACENT RIGHT-OF-WAY. EASEMENTS SHALL BE CLEARLY MARKED OR STAKED PRIOR TO THE START OF CONSTRUCTION.

REDUCED PRESSURE PRINCIPLE ASSEMBLY (RPPA): (4) 1", (2) 1-1/2", (1) 2"

APPROVED REDUCED PRESSURE PRINCIPLE ASSEMBLY(S) SHALL BE INSTALLED PER THE U.D.A.C.S. PLATE NO. 8. NO WATER SHALL BE TAKEN FROM A SERVICE REQUIRING BACK FLOW PREVENTION UNTIL THE REDUCED PRESSURE PRINCIPLE ASSEMBLY HAS BEEN SUCCESSFULLY TESTED BY THE LVVWD.

ANY BLOCK WALL OR OTHER FENCE MATERIAL SHALL BE DESIGNED AND CONSTRUCTED AROUND THE OUTSIDE OF THE EASEMENT(S) TO ALLOW THE DISTRICT DIRECT ACCESS FROM THE ADJACENT RIGHT-OF-WAY.

EASEMENTS SHALL BE CLEARLY MARKED OR STAKED PRIOR TO THE START OF CONSTRUCTION.

WATER CONSTRUCTION NOTES:

– ALL WATER CONSTRUCTION TO BE DONE IN ACCORDANCE WITH "UNIFORM DESIGN AND CONSTRUCTION STANDARDS FOR WATER DISTRIBUTION SYSTEMS (UDACS)" LATEST EDITION.
– NOT ALL NOTES USED ON THIS SHEET –

1. INSTALL 10" RPDA PER UDACS PLATE NO. 59.
2. NOT USED.
3. INSTALL 3/4" METER PER DETAIL ON SHEET C2.03
4. INSTALL 1-1/2" RPPA PER DETAIL ON SHEET C2.03
5. INSTALL 1-1/2" METER PER DETAIL ON SHEET C2.03
6. INSTALL REDUCER (SAME SIZE AS PIPES)
7. INSTALL FIRE HYDRANT W/ GATE VALVE PER UDACS PLATE NO. 40.
8. INSTALL SERVICE SADDLE (SAME SIZE AS PIPE) PER DETAIL ON SHEET C2.03
9. INSTALL GATE VALVE (SAME SIZE AS PIPE) PER UDACS PLATE NO. 30 AND 39.
10. INSTALL 90° BEND W/THRUST BLOCK (SAME SIZE AS PIPE) PER UDACS PLATE NO. 31.
11. INSTALL 45° BEND W/THRUST BLOCK (SAME SIZE AS PIPE) PER UDACS PLATE NO. 31
12. INSTALL 22.5° BEND W/THRUST BLOCK (SAME SIZE AS PIPE) PER UDACS PLATE NO. 31
13. INSTALL 11.25° BEND W/THRUST BLOCK (SAME SIZE AS PIPE) PER UDACS PLATE NO. 31
14. INSTALL TEE (SAME SIZE AS PIPES) PER UDACS PLATE NO. 31.
15. STUB & CAP WATER SERVICE. REFER TO PLUMBING PLANS FOR CONTINUATION.
16. STUB & CAP WATER SERVICE. REFER TO LANDSCAPE PLANS FOR CONTINUATION.
17. STUB & CAP WATER SERVICE.
18. INSTALL 90° BEND (SAME SIZE AS PIPE) PER UDACS PLATE NO. 31.
19. INSTALL 45° BEND (SAME SIZE AS PIPE) PER UDACS PLATE NO. 31
20. INSTALL 22.5° BEND (SAME SIZE AS PIPE) PER UDACS PLATE NO. 31
21. INSTALL 11.25° BEND (SAME SIZE AS PIPE) PER UDACS PLATE NO. 31
22. INSTALL 1" RPPA PER DETAIL ON SHEET C2.03
23. INSTALL 1" METER PER DETAIL ON SHEET C2.03
24. INSTALL RETAINING WALL WITH HANDRAIL PER STRUCTURAL DRAWINGS.
25. INSTALL 2" RPPA PER DETAIL ON SHEET C2.03
26. INSTALL 2" METER PER DETAIL ON SHEET C2.03

FIRE FLOW CALCULATIONS

BASED ON:	BLDG 1	BLDG 2	C-STORE	CARWASH	STORAGE
SQUARE FOOTAGE:	2,061 SF	4,499 SF	3,868	2,154	94,055
LARGEST AREA BETWEEN SEPARATION WALL:	N/A	N/A	N/A	N/A	N/A
BUILDING HEIGHT:	24'-0"	23'-6"	19'-2"	22'-6"	21'-10 3/8"
NUMBER OF STORIES:	1 STORY	1 STORY	1 STORY	1 STORY	3 STORY
TYPE OF CONSTRUCTION:	V-B	V-B	V-B	V-B	II-B
EXPOSURES:	N/A	N/A	N/A	N/A	N/A
SPRINKLER SYSTEM:	NO	NO	NO	NO	YES
OCCUPANCY:	A-2	A-2/M	M	B	B/R-3/S-1
ROOF CONSTRUCTION:	WOOD TRUSSES W/ PLYWOOD SHEATHING	CLASS C	WOOD TRUSSES	WOOD TRUSSES	CLASS A
FLOW REQUIRED @ 20 PSI RESIDUAL:	1,500 GPM	1,750 GPM	1,750 GPM	1,500 GPM	3,250 GPM

EX. STATIC WATER PRESSURE IS 67± psi IN STREET.

FIRE ACCESS NOTES/ LEGEND:

1. INSTALL FIRE LANE SIGN AT A MAXIMUM DISTANCE OF EVERY 100' ALONG THE FIRE LANE PER FIRE LANE DETAIL SHEET C2.01
2. INSTALL FIRE LANE ENTRANCE WARNING SIGN PER DETAIL ON SHEET C2.01.

NOTE: CURB SHALL BE PAINTED RED ADJACENT TO DESIGNATED FIRE TRUCK ROUTE

24' WIDE FIRE TRUCK ACCESSIBLE ROUTE TURNING RADIUS OF 28' & 52' MIN.

NOTE:

REMOVAL OF EXISTING ACTIVE UTILITIES TO BE PHASED AS DIRECTED BY OWNER.

1st Approval 6/14/17

APPROVED FOR CONSTRUCTION

[signature]

LAS VEGAS VALLEY WATER DISTRICT ENGINEERING SERVICES
PROJECT No. 125376 FIRST APPROVED DATE: 5/14/18
LVVWD APPROVED FIRE FLOW: TOTAL 3,200 GPM/ONSITE 3,200 GPM

NOTE: ALL LOCATIONS OF UTILITIES SHOWN ARE APPROXIMATE

CITY OF LAS VEGAS FIRE DEPARTMENT APPROVAL

BY: [signature] DATE: 4/10/18

APPROVAL OF THESE PLANS SHALL NOT BE CONSTRUED TO BE A PERMIT FOR, OR AN APPROVAL OF, ANY VIOLATION OF ANY OF THE PROVISIONS OF THE STATE OR COUNTY LAWS. TOTAL FIRE FLOW=3,250 GPM AT 20 P.S.I. RESIDUAL.

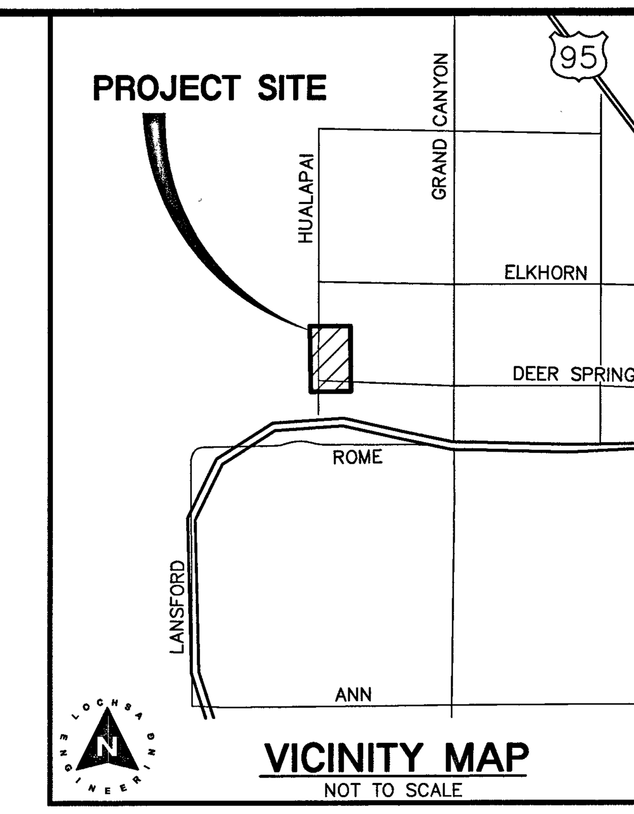

VICINITY MAP
NOT TO SCALE

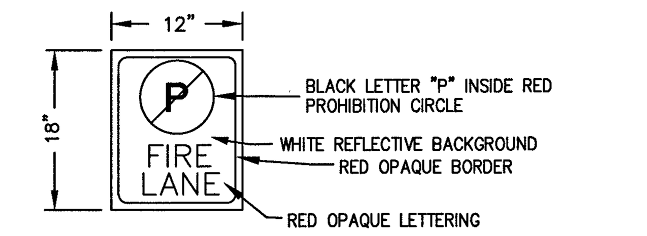

"FIRE LANE" SIGN N.T.S.

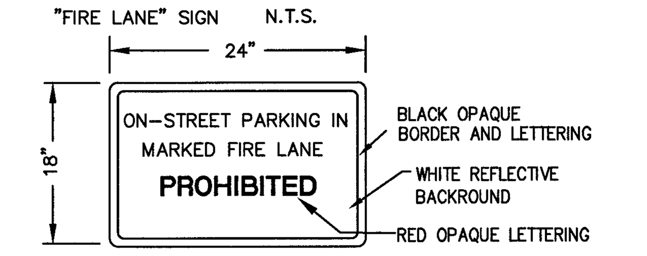

ENTRANCE WARNING SIGN N.T.S.

GENERAL UTILITY NOTES:

1. STATIC WATER PRESSURE IN ZONE 2975 = 67 PSI±.
2. THE FIRE SAFETY CONTRACTOR IS RESPONSIBLE FOR ESTABLISHING THE SIZE OF PIPING REQUIRED TO CONNECT FROM THE FIRE WATER LOOP TO THE FIRE SPRINKLER RISER. LINE SIZE SHOWN FOR INFORMATION PURPOSES ONLY.
3. TRENCH BACKFILL FOR WATER LINES TO BE CONSTRUCTED PER UDACS PLATE NO. 17, EXCEPT WITHIN NDOT RIGHT OF WAYS, TRENCH BACKFILL TO BE CONSTRUCTED PER UDACS PLATE NO. 18.
4. ONLY SEWER LINES AND LATERALS MAY BE INSTALLED IN TRENCHES EXCAVATED FOR SEWER LINES. SEE DCSWCS SECTION 2.2.18 (TYPICAL).
5. WATER AND SEWER TO BE INSTALLED IN SEPERATE TRENCHES WITH AT LEAST 10' MINIMUM SEPERATION FROM EXTERIOR PIPE WALLS (TYPICAL). SEE UDACS SECTION 2.22.
6. CONTRACTOR TO SAWCUT AND REMOVE EXISTING ASPHALT AND CONCRETE AS NECESSARY FOR UTILITY TRENCHES, BACKFILL AND PATCH ALL TRENCHES AS INDICATED ON DETAILS AND/OR ACCORDING TO THE GOVERNING ENTITY.
7. THESE DRAWINGS MAY NOT INDICATE ALL EXISTING BURIED UTILITY LINES. CONTRACTOR IS TO EXERCISE GREAT CARE DURING EXCAVATION IN ORDER TO AVOID MAKING CONTACT WITH ANY EXISTING UTILITY LINES. IF UTILITY LINES ARE DAMAGED BY THE CONTRACTOR, SUCH DAMAGE SHALL BE REPLACED TO THE SATISFACTION OF THE OWNER AT THE CONTRACTOR'S EXPENSE.
8. CONTRACTOR TO LOCATE AND VERIFY SIZE, LINE TYPE, CONDITION, DEPTH, PRESSURE, AND LOCATION OF ALL EXISTING UTILITY LINES WITHIN THE CONSTRUCTION AREA PRIOR TO CONSTRUCTION. THE CIVIL ENGINEER SHALL BE CONTACTED ONCE THE UTILITY LINE IS LOCATED.
9. CONTRACTOR/OWNER TO OBTAIN CITY OF LAS VEGAS OFF-SITE IMPROVEMENT PERMIT FOR ALL WORK WITHIN PUBLIC RIGHT-OF-WAY.
10. CONTRACTOR TO VERIFY UTILITY STUB LOCATIONS AND SIZE WITH PLUMBING PLANS PRIOR TO INSTALLATION OF NEW UTILITIES.
11. ALL EXISTING STREET LIGHTS INDICATED ON THESE PLANS ARE SHOWN FOR INFORMATION PURPOSES ONLY. LOCATION IS APPROXIMATE UNLESS NOTED WITH STATION AND OFFSET.
12. ALL EXISTING GAS LINE LOCATIONS SHOWN ON THESE PLANS ARE APPROXIMATIONS ONLY. PROPOSED GAS LINES SHOWN ON THESE PLANS ARE FOR COORDINATION ONLY. SEE SOUTHWEST GAS PLANS FOR CONSTRUCTION.
13. ALL DIMENSIONS TO UTILITIES LINES ARE TO CENTERLINE OF PIPE UNLESS INDICATED OTHERWISE.
14. ALL LINEAR FEET OF STORM DRAIN AND SANITARY SEWER PIPE NOTED ON PLANS IS MEASURED FROM CENTER OF MANHOLE TO CENTER OF MANHOLE.

NOTE:

LOCHSA ENGINEERING ASSUMES NO RESPONSIBILITY FOR EXISTING UTILITY LOCATIONS AND ELEVATIONS. THE UTILITIES SHOWN ON THIS PLAN ARE FROM THE BEST AVAILABLE INFORMATION. IT IS THE CONTRACTOR'S RESPONSIBILITY TO FIELD VERIFY THE LOCATION AND ELEVATION OF ALL UTILITIES, INCLUDING BUT NOT LIMITED TO, THE WATER, FIRE, SANITARY SEWER, STORM SEWER, TELEPHONE, POWER, GAS, AND IRRIGATION LINES PRIOR TO THE COMMENCEMENT OF CONSTRUCTION. IF CONFLICT EXISTS IN THE FIELD, THE CONTRACTOR IS TO NOTIFY THE PROJECT ARCHITECT, OWNER'S REPRESENTATIVE AND THE PROJECT ENGINEER IMMEDIATELY.

Call before you Dig — Avoid cutting underground utility lines. It's costly. CALL 811 OR 1-800-227-2600
FAST — Call before you Underground 1-702-432-5300 FREEWAY & ARTERIAL SYSTEM OF TRANSPORTATION
Avoid hitting overhead power lines. It's costly. CALL BEFORE YOU DO OVERHEAD 1-702-227-2929

REV.:	DATE:	BY:	DESCRIPTION:
2	3/14/18	JLI	ADDED BUILDING 2 AND ASSOCIATED WATER/SEWER SERVICES CLV SB 5/16/18

Lochsa engineering
6345 South Jones Blvd. Suite 100
Las Vegas, NV 89118
Phone (702) 365-9312
Fax (702) 365-9317
www.lochsa.com

SHEET: UTILITY PLANS SHEET 1 OF 3

TITLE: DEER SPRINGS AND HUALAPAI CITY OF LAS VEGAS, NEVADA

PROJECT No.: 161109
DATE: APRIL 3, 2018
SCALE: 1"=30'
DRAWN BY: MGZ
DESIGNED BY: MGZ
CHECKED BY: JLI

SEAL: PROFESSIONAL ENGINEER STATE OF NEVADA, CIVIL, No. 11286, 04/03/2018

PROJ #125376 AGR #116293 QS 125-19-NW

SHEET No. C2.01 — SHEET 3 OF 15
10745060 L-69418
CLV No. 69418 HTE No. 17-19756

LEGEND

CL OR SURVEY LINE	EASEMENT LINE
PROPERTY LINE	SAWCUT LINE
ROW LINE	SCARP LINE

DESCRIPTION:	CONTOUR LINES	EDGE OF PAVEMENT	"A" TYPE CURBS	"L" TYPE CURBS	WALLS	FENCES	AC PAVEMENT	CONCRETE	SPOT ELEVATIONS	SIGNS	MANHOLE W/ DESCRIPTION	FIRE HYDRANTS	GATE VALVES	REDUCERS	CLEAN OUTS	UTILITY BOX OR VAULT	BACKWATER VALVES	100w HPS STREETLIGHTS	150w HPS STREETLIGHTS	200w HPS STREETLIGHTS	250w HPS STREETLIGHTS
EXISTING:	(2210)								(12.34) BC		Ⓢ						BWV				
PROPOSED:	(2122)								12.34 BC		Ⓢ						BWV				

MANHOLE DESCRIPTIONS: Ⓢ = SANITARY SEWER, Ⓓ = STORM DRAIN, Ⓔ = ELECTRICAL, Ⓣ = TELEPHONE

4/3/2018 1:41 PM
T:\CAD\161109\Drawings\Plot Drawings\c-161109-ut.dwg

NOTE:

CONTRACTOR SHALL EMPLOY A NEVADA LICENSED PROFESSIONAL LAND SURVEYOR (PLS) TO FIELD STAKE THE EXTENT OF THE PROPOSED/EXISTING LVVWD EASEMENT WITHIN THE PROJECT SITE. THESE STAKES SHALL BE CONTINUOUSLY MAINTAINED DURING THE CONSTRUCTION OF THE PROJECT. THE PLS SHALL ALSO FIELD STAKE THE PROPOSED EXTENT OF ADJACENT PROJECT BUILDING IMPROVEMENTS IMMEDIATELY ADJACENT TO THE EASEMENT. CONTRACTOR SHALL NOTIFY THE LVVWD INSPECTOR AT LEAST FORTY-EIGHT (48) HOURS PRIOR TO THE INITIAL BUILDING EXCAVATION AND FOUNDATION CONSTRUCTION ACTIVITY. LVVWD WILL INSPECT THE FIELD STAKING FOR COMPLIANCE WITH SEPARATION REQUIREMENTS. THE CONTRACTOR SHALL NOTIFY THE LVVWD PRIOR TO UTILITY TRENCHING OR ANY OTHER SUBGRADE EFFORTS WITHIN THE PRPOSED/EXISTING LVVWD EASEMENT.

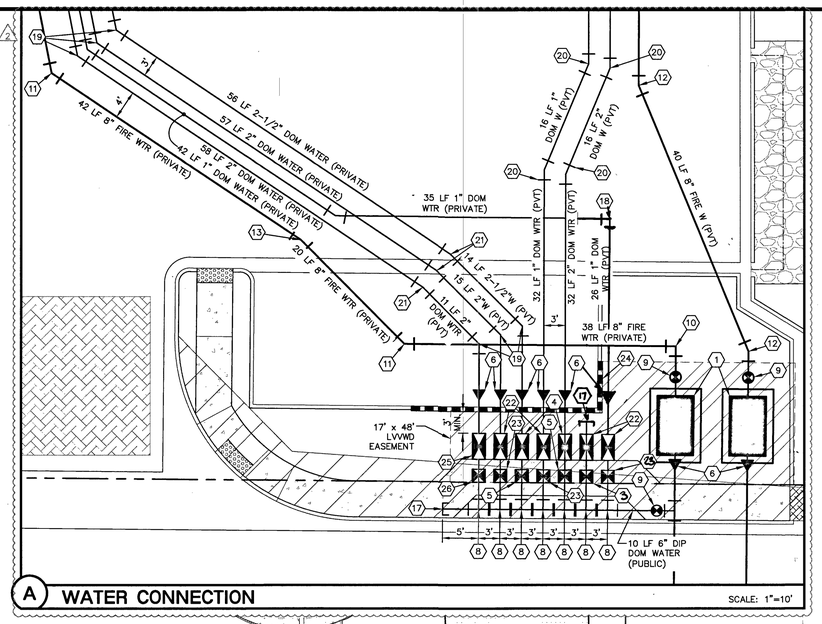

A WATER CONNECTION

SCALE: 1"=10'

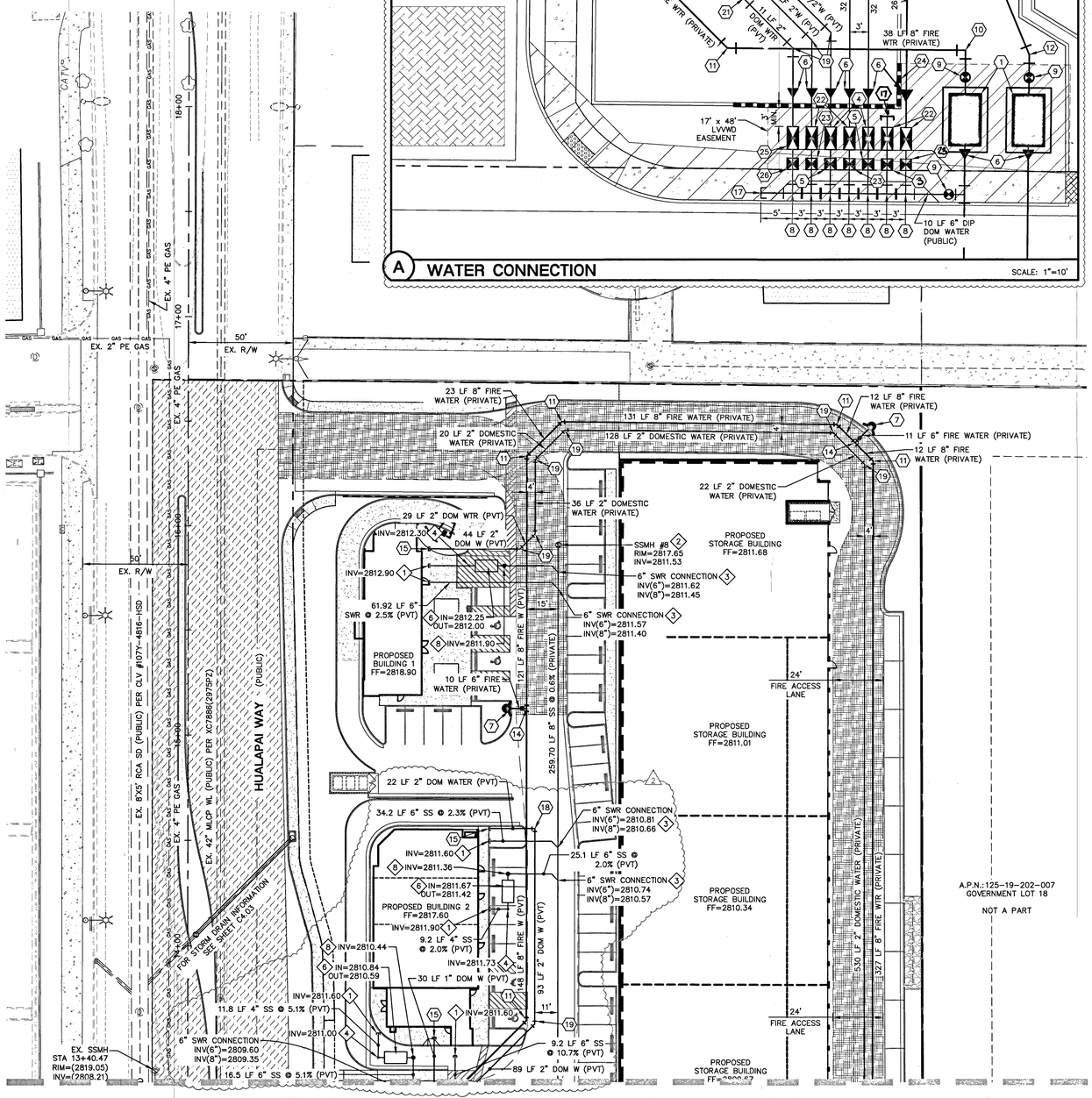

FOR CONTINUATION SEE SHEET C2.01

SEWER CONSTRUCTION NOTES:

– NOT ALL NOTES USED ON THIS SHEET –

1. STUB & CAP SANITARY SEWER SERVICE. REFER TO PLUMBING PLANS FOR CONTINUATION.
2. INSTALL 48" SANITARY SEWER MANHOLE & BASE PER DCSWCS DWG. NO. SD-1A & SD-1B, CONCRETE COLLAR PER SD-4, SINGLE COVER 24"
3. INSTALL WYE LATERAL CONNECTION PER DCSWCS DWG. NO. SD-22.
4. INSTALL SEWER CLEAN-OUT PER DCSWCS DWG. NO. SD-26.
5. INSTALL 1500 GALLON SAND/OIL INTERCEPTOR BY OTHERS
6. INSTALL 1500 GALLON GREASE INTERCEPTOR BY OTHERS
7. NOT USED
8. SAMPLE MANHOLE FOR INTERCEPTOR(S) BY OTHERS
9. INSTALL SEWER BACK WATER VALVE.

GRAPHIC SCALE

30 0 15 30 60

(IN FEET)
1 inch = 30 ft.

FIRE WATER AT DOMESTIC WATER CROSSINGS

ALL NON-POTABLE FIRE WATER LINES CROSSING POTABLE DOMESTIC WATER LINES ARE TO BE INSTALLED WITH "A VERTICAL SEPARATION OF NO LESS THAN SIZ INCHES..." AND IN ACCORDANCE WITH UDACS 2.23.01, 2.04.03, 2.22.02.B1, AND 2.22.02.B2.

WARNING:

WARNING FIRE LINE (NON-POTABLE WATER) ALL EXISTING, RELOCATED OR PROPOSED DCDA/RPDA INSTALLATIONS:

"TO COMPLY WITH THE FEDERAL SAFE DRINKING WATER ACT, THE FIRE LINE OR ANY OF ITS COMPONENTS, SHALL NOT BE USED FOR POTABLE DRINKING WATER AT ANY TIME."

NOTE:

ALL SEWER/STORM DRAINS CROSSING WATER LINES MUST CONFORM TO SECTION 2.22 OF UNIFORM DESIGN AND CONSTRUCTION STANDARD FOR WATER DISTRIBUTION SYSTEMS (UDACS) FOR WATER AND STORM DRAIN CROSSING AND CLEARANCES.

NOTE:

ALL ABOVE GROUND UTILITY SHALL COMPLY WITH TITLE 19.08.010 UTILITY SCREENING REQUIREMENTS, ALL ABOVE GROUND UTILITIES GREATER THAN 27 CUBIC FEET SHALL BE SETBACK A MINIMUM OF 3' FROM THE BACK OF SIDEWALK AND SHALL INCLUDE VEGETATION THAT UPON MATURITY WILL ADEQUATELY SCREEN SUCH EQUIPMENT FROM PUBLIC VIEW.

NOTE:

THE DISTRICT CANNOT GUARANTEE A WATERTIGHT SHUTDOWN WHERE CONNECTIONS OR REPAIRS TO EXISTING FACILITIES ARE REQUIRED. THE CONTRACTOR SHALL ENSURE ALL LABOR AND EQUIPMENT IS AVAILABLE TO REMOVE FUGITIVE WATER THAT MAY IMPEDE CONSTRUCTION AT ALL TIMES. COORDINATION WITH INSPECTION DIVISION MUST TAKE PLACE PRIOR TO ANY TRIAL SHUTDOWN.
CONTRACTOR TO INSTALL TEMPORARY SERVICE TO ENSURE PROPER SHUTDOWN IN THE EVENT NO OTHER APPURTENANCES ARE AVAILABLE.

NOTE:

CONTRACTOR TO INCLUDE COST OF UNDERGROUND UTILITY DETECTION COMPANY TO LOCATE AND MARK ALL EXISTING UTILITIES PRIOR TO ANY DEMOLITION OR EXCAVATION. ENGINEER TO BE PROVIDED WITH AS-BUILT SKETCH OF EXISTING UTILITIES, AND IS TO BE NOTIFIED IMMEDIATELY OF ANY POTENTIAL CONFLICTS WITH PROPOSED UTILITIES AND/OR FINISHED GRADES.

REDUCED PRESSURE DETECTOR ASSEMBLY (RPDA): (2) 10"

THE REDUCED PRESSURE DETECTOR ASSEMBLIES SHALL BE INSTALLED IN ACCORDANCE WITH THE UDACS PLATE NO. 59. NO WATER SHALL BE TAKEN FROM A SERVICE REQUIRING BACKFLOW PREVENTION UNTIL THE ASSEMBLY HAS BEEN SUCCESSFULLY TESTED BY LVVWD. ANY BLOCK WALL OR OTHER FENCE MATERIAL SHALL BE DESIGNED AND CONSTRUCTED AROUND THE OUTSIDE OF THE EASEMENT(S) SO AS TO ALLOW LVVWD DIRECT ACCESS FROM THE ADJACENT RIGHT-OF-WAY. EASEMENTS SHALL BE CLEARLY MARKED OR STAKED PRIOR TO THE START OF CONSTRUCTION.

REDUCED PRESSURE PRINCIPLE ASSEMBLY (RPPA): (4) 1", (2) 1-1/2", (1) 2"

APPROVED REDUCED PRESSURE PRINCIPLE ASSEMBLY(S) SHALL BE INSTALLED PER THE U.D.A.C.S. PLATE NO. 8. NO WATER SHALL BE TAKEN FROM A SERVICE REQUIRING BACK FLOW PREVENTION UNTIL THE REDUCED PRESSURE PRINCIPLE ASSEMBLY HAS BEEN SUCCESSFULLY TESTED BY THE LVVWD.

ANY BLOCK WALL OR OTHER FENCE MATERIAL SHALL BE DESIGNED AND CONSTRUCTED AROUND THE OUTSIDE OF THE EASEMENT(S) TO ALLOW THE DISTRICT DIRECT ACCESS FROM THE ADJACENT RIGHT-OF-WAY.

EASEMENTS SHALL BE CLEARLY MARKED OR STAKED PRIOR TO THE START OF CONSTRUCTION.

WATER CONSTRUCTION NOTES:

– ALL WATER CONSTRUCTION TO BE DONE IN ACCORDANCE WITH "UNIFORM DESIGN AND CONSTRUCTION STANDARDS FOR WATER DISTRIBUTION SYSTEMS (UDACS)" LATEST EDITION.
– NOT ALL NOTES USED ON THIS SHEET –

1. INSTALL 10" RPDA PER UDACS PLATE NO. 59.
2. NOT USED.
3. INSTALL 3/4" METER PER DETAIL ON SHEET C2.03
4. INSTALL 1-1/2" RPPA PER DETAIL ON SHEET C2.03
5. INSTALL 1-1/2" METER PER DETAIL ON SHEET C2.03
6. INSTALL REDUCER (SAME SIZE AS PIPES)
7. INSTALL FIRE HYDRANT W/ GATE VALVE PER UDACS PLATE NO. 40.
8. INSTALL SERVICE SADDLE (SAME SIZE AS PIPE) PER DETAIL ON SHEET C2.03
9. INSTALL GATE VALVE (SAME SIZE AS PIPE) PER UDACS PLATE NO. 30 AND 39.
10. INSTALL 90° BEND W/THRUST BLOCK (SAME SIZE AS PIPE) PER UDACS PLATE NO. 31.
11. INSTALL 45° BEND W/THRUST BLOCK (SAME SIZE AS PIPE) PER UDACS PLATE NO. 31
12. INSTALL 22.5° BEND W/THRUST BLOCK (SAME SIZE AS PIPE) PER UDACS PLATE NO. 31
13. INSTALL 11.25° BEND W/THRUST BLOCK (SAME SIZE AS PIPE) PER UDACS PLATE NO. 31
14. INSTALL TEE (SAME SIZE AS PIPES) PER UDACS PLATE NO. 31.
15. STUB & CAP WATER SERVICE. REFER TO PLUMBING PLANS FOR CONTINUATION.
16. STUB & CAP WATER SERVICE. REFER TO LANDSCAPE PLANS FOR CONTINUATION.
17. STUB & CAP WATER SERVICE.
18. INSTALL 90° BEND (SAME SIZE AS PIPE) PER UDACS PLATE NO. 31.
19. INSTALL 45° BEND (SAME SIZE AS PIPE) PER UDACS PLATE NO. 31
20. INSTALL 22.5° BEND (SAME SIZE AS PIPE) PER UDACS PLATE NO. 31
21. INSTALL 11.25° BEND (SAME SIZE AS PIPE) PER UDACS PLATE NO. 31
22. INSTALL 1" RPPA PER DETAIL ON SHEET C2.03
23. INSTALL 1" METER PER DETAIL ON SHEET C2.03
24. INSTALL RETAINING WALL WITH HANDRAIL PER STRUCTURAL DRAWINGS.
25. INSTALL 2" RPPA PER DETAIL ON SHEET C2.03
26. INSTALL 2" METER PER DETAIL ON SHEET C2.03

FIRE FLOW CALCULATIONS

BASED ON:	BLDG 1	BLDG 2	C-STORE	CARWASH	STORAGE
SQUARE FOOTAGE:	2,061 SF	4,499 SF	3,868	2,154	94,055
LARGEST AREA BETWEEN SEPARATION WALL:	N/A	N/A	N/A	N/A	N/A
BUILDING HEIGHT:	24'-0"	23'-6"	19'-2"	22'-6"	21'-10 3/8"
NUMBER OF STORIES:	1 STORY	1 STORY	1 STORY	1 STORY	3 STORY
TYPE OF CONSTRUCTION:	V-B	V-B	V-B	V-B	II-B
EXPOSURES:	N/A	N/A	N/A	N/A	N/A
SPRINKLER SYSTEM:	NO	NO	NO	NO	YES
OCCUPANCY:	A-2	A-2/M	M	B	B/R-3/S-1
ROOF CONSTRUCTION:	WOOD TRUSSES W/ PLYWOOD SHEATHING	CLASS C	WOOD TRUSSES	WOOD TRUSSES	CLASS A
FLOW REQUIRED @ 20 PSI RESIDUAL:	1,500 GPM	1,750 GPM	1,750 GPM	1,500 GPM	3,250 GPM

EX. STATIC WATER PRESSURE IS 67± psi IN STREET.

FIRE ACCESS NOTES/ LEGEND:

1. INSTALL FIRE LANE SIGN AT A MAXIMUM DISTANCE OF EVERY 100' ALONG THE FIRE LANE PER FIRE LANE DETAIL SHEET C2.01
2. INSTALL FIRE LANE ENTRANCE WARNING SIGN PER DETAIL ON SHEET C2.01.

NOTE: CURB SHALL BE PAINTED RED ADJACENT TO DESIGNATED FIRE TRUCK ROUTE

24' WIDE FIRE TRUCK ACCESSIBLE ROUTE TURNING RADIUS OF 28' & 52' MIN.

NOTE:

REMOVAL OF EXISTING ACTIVE UTILITIES TO BE PHASED AS DIRECTED BY OWNER.

1st APPROVE: 6/14/17

APPROVED FOR CONSTRUCTION

LAS VEGAS VALLEY WATER DISTRICT ENGINEERING SERVICES

PROJECT No. 125376 FIRST APPROVED DATE: 5/14/18

LVVWD APPROVED FIRE FLOW: TOTAL 3,200 GPM/ONSITE 3,200 GPM

NOTE: ALL LOCATIONS OF UTILITIES SHOWN ARE APPROXIMATE

CITY OF LAS VEGAS FIRE DEPARTMENT APPROVAL

BY: DATE: 4/19/18

APPROVAL OF THESE PLANS SHALL NOT BE CONSTRUED TO BE A PERMIT FOR, OR AN APPROVAL OF, ANY VIOLATION OF ANY OF THE PROVISIONS OF THE STATE OR COUNTY LAWS. TOTAL FIRE FLOW=3,250 GPM AT 20 P.S.I. RESIDUAL.

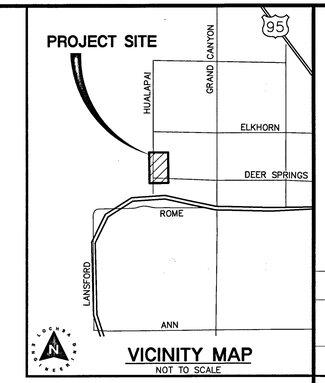

VICINITY MAP

NOT TO SCALE

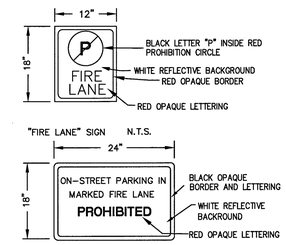

GENERAL UTILITY NOTES:

1. STATIC WATER PRESSURE IN ZONE 2975 = 67 PSI±.
2. THE FIRE SAFETY CONTRACTOR IS RESPONSIBLE FOR ESTABLISHING THE SIZE OF PIPING REQUIRED TO CONNECT FROM THE FIRE WATER LOOP TO THE FIRE SPRINKLER RISER. LINE SIZE SHOWN FOR INFORMATION PURPOSES ONLY.
3. TRENCH BACKFILL FOR WATER LINES TO BE CONSTRUCTED PER UDACS PLATE NO. 17, EXCEPT WITHIN NDOT RIGHT OF WAYS, TRENCH BACKFILL TO BE CONSTRUCTED PER UDACS PLATE NO. 18.
4. ONLY SEWER LINES AND LATERALS MAY BE INSTALLED IN TRENCHES EXCAVATED FOR SEWER LINES. SEE DCSWCS SECTION 2.2.18 (TYPICAL).
5. WATER AND SEWER TO BE INSTALLED IN SEPERATE TRENCHES WITH AT LEAST 10' MINIMUM SEPERATION FROM EXTERIOR PIPE WALLS (TYPICAL). SEE UDACS SECTION 2.22.
6. CONTRACTOR TO SAWCUT AND REMOVE EXISTING ASPHALT AND CONCRETE AS NECESSARY FOR UTILITY TRENCHES, BACKFILL AND PATCH ALL TRENCHES AS INDICATED ON DETAILS AND/OR ACCORDING TO THE GOVERNING ENTITY.
7. THESE DRAWINGS MAY NOT INDICATE ALL EXISTING BURIED UTILITY LINES. CONTRACTOR IS TO EXERCISE GREAT CARE DURING EXCAVATION IN ORDER TO AVOID MAKING CONTACT WITH ANY EXISTING UTILITY LINES. IF UTILITY LINES ARE DAMAGED BY THE CONTRACTOR, SUCH DAMAGE SHALL BE REPLACED TO THE SATISFACTION OF THE OWNER AT THE CONTRACTOR'S EXPENSE.
8. CONTRACTOR TO LOCATE AND VERIFY SIZE, LINE TYPE, CONDITION, DEPTH, PRESSURE, AND LOCATION OF ALL EXISTING UTILITY LINES WITHIN THE CONSTRUCTION AREA PRIOR TO CONSTRUCTION. THE CIVIL ENGINEER SHALL BE CONTACTED ONCE THE UTILITY LINE IS LOCATED.
9. CONTRACTOR/OWNER TO OBTAIN CITY OF LAS VEGAS OFF-SITE IMPROVEMENT PERMIT FOR ALL WORK WITHIN PUBLIC RIGHT-OF-WAY.
10. CONTRACTOR TO VERIFY UTILITY STUB LOCATIONS AND SIZE WITH PLUMBING PLANS PRIOR TO INSTALLATION OF NEW UTILITIES.
11. ALL EXISTING STREET LIGHTS INDICATED ON THESE PLANS ARE SHOWN FOR INFORMATION PURPOSES ONLY. LOCATION IS APPROXIMATE UNLESS NOTED WITH STATION AND OFFSET.
12. ALL EXISTING GAS LINE LOCATIONS SHOWN ON THESE PLANS ARE APPROXIMATIONS ONLY. PROPOSED GAS LINES SHOWN ON THESE PLANS ARE FOR COORDINATION ONLY. SEE SOUTHWEST GAS PLANS FOR CONSTRUCTION.
13. ALL DIMENSIONS TO UTILITIES LINES ARE TO CENTERLINE OF PIPE UNLESS INDICATED OTHERWISE.
14. ALL LINEAR FEET OF STORM DRAIN AND SANITARY SEWER PIPE NOTED ON PLANS IS MEASURED FROM CENTER OF MANHOLE TO CENTER OF MANHOLE.

NOTE:

LOCHSA ENGINEERING ASSUMES NO RESPONSIBILITY FOR EXISTING UTILITY LOCATIONS AND ELEVATIONS. THE UTILITIES SHOWN ON THIS PLAN ARE FROM THE BEST AVAILABLE INFORMATION. IT IS THE CONTRACTOR'S RESPONSIBILITY TO FIELD VERIFY THE LOCATION AND ELEVATION OF ALL UTILITIES, INCLUDING BUT NOT LIMITED TO, THE WATER, FIRE, SANITARY SEWER, STORM SEWER, TELEPHONE, POWER, GAS, AND IRRIGATION LINES PRIOR TO THE COMMENCEMENT OF CONSTRUCTION. IF CONFLICT EXISTS IN THE FIELD, THE CONTRACTOR IS TO NOTIFY THE PROJECT ARCHITECT, OWNER'S REPRESENTATIVE AND THE PROJECT ENGINEER IMMEDIATELY.

Call before you Dig
Avoid cutting underground utility lines. It's costly.
CALL 811 OR 1-800-227-2800

FAST Call Before you Underground 1-702-432-5300 FREEWAY & ARTERIAL SYSTEM OF TRANSPORTATION

Avoid hitting overhead power lines. It's costly.
CALL BEFORE YOU DO OVERHEAD 1-702-227-2929

REV.:	DATE:	BY:	DESCRIPTION:
1	3/14/18	JJ	ADDED BUILDING 2 AND ASSOCIATED WATER/SEWER SERVICES

Lochsa engineering
6345 South Jones Blvd.
Suite 100
Las Vegas, NV 89118
Phone (702) 365-9312
Fax (702) 365-9317
www.lochsa.com

UTILITY PLANS
SHEET 2 OF 3

DEER SPRINGS AND HUALAPAI
CITY OF LAS VEGAS,
NEVADA

SHEET
TITLE

PROJECT No.: 161109
DATE: APRIL 3, 2018
SCALE: 1"=30'
DRAWN BY: MGZ
DESIGNED BY: MGZ
CHECKED BY: JLI

SEAL
NEVADA STATE OF NEVADA
TED SHAW
EXP. 12-31-18
No. 11286
04/03/2018

SHEET No. C2.02
SHEET 4 OF 15

CLV No. 69418 HTE No. 17-19756

PROJ #125376 AGR #116293 QS 125-19-NW

4/3/2018 1:41 PM
T:\CAD\161109\Drawings\Plot Drawings\C-161109-u1.dwg

LEGEND

CL OR SURVEY LINE	EASEMENT LINE	DESCRIPTION:	CONTOUR LINES	EDGE OF PAVEMENT	"A" TYPE CURBS	"L" TYPE CURBS	WALLS	FENCES	AC PAVEMENT	CONCRETE	SPOT ELEVATIONS	SIGNS	MANHOLE W/ DESCRIPTION	MANHOLE DESCRIPTIONS	FIRE HYDRANTS	GATE VALVES	REDUCERS	CLEAN OUTS	UTILITY BOX OR VAULT	BACKWATER VALVES	100w HPS STREETLIGHTS	150w HPS STREETLIGHTS	200w HPS STREETLIGHTS	250w HPS STREETLIGHTS
PROPERTY LINE	SAWCUT LINE	EXISTING:	(2210)								(12.34) BC		S	(S) = SANITARY SEWER						BWV				
ROW LINE	SCARP LINE	PROPOSED:	2122								12.34 BC			(D) = STORM DRAIN						BWV				
														(E) = ELECTRICAL										
														(T) = TELEPHONE										

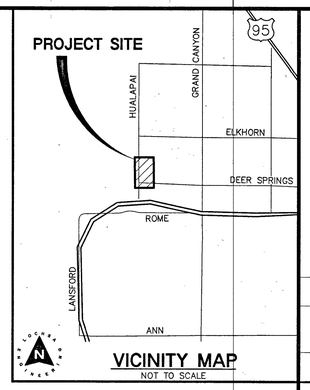

VICINITY MAP
NOT TO SCALE

GRAPHIC SCALE
30 0 15 30 60
(IN FEET)
1 inch = 30 ft.

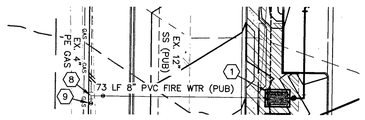

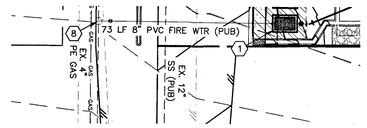

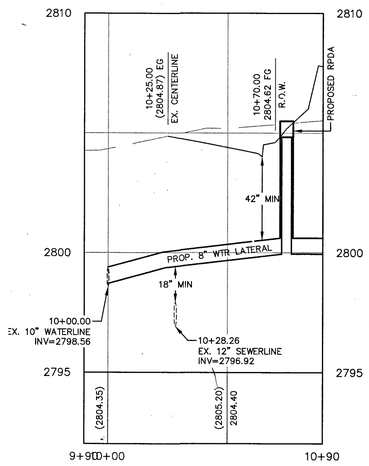

WTR-LAT-1 PROFILE VIEW
HORIZONTAL SCALE: 1"=30'
VERTICAL SCALE: 1"=3'

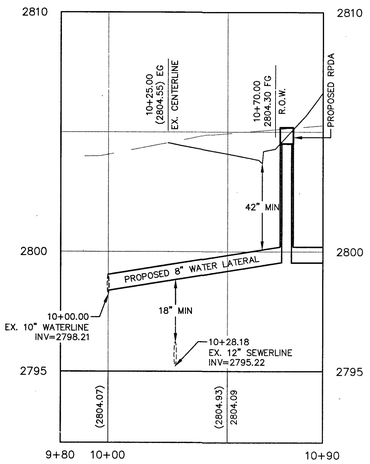

WTR-LAT-2 PROFILE VIEW
HORIZONTAL SCALE: 1"=30'
VERTICAL SCALE: 1"=3'

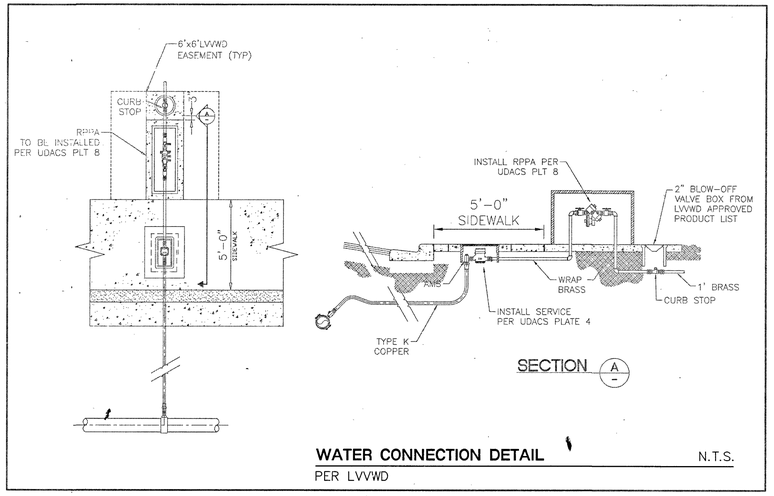

WATER CONNECTION DETAIL
PER LVVWD
N.T.S.

WATER CONSTRUCTION NOTES:

- ALL WATER CONSTRUCTION TO BE DONE IN ACCORDANCE WITH "UNIFORM DESIGN AND CONSTRUCTION STANDARDS FOR WATER DISTRIBUTION SYSTEMS (UDACS)" LATEST EDITION.
- NOT ALL NOTES USED ON THIS SHEET -

1. INSTALL 10" RPDA PER UDACS PLATE NO. 56.
2. INSTALL 1" RPPA PER DETAIL ON SHEET C2.03
3. INSTALL 1" DOMESTIC METER PER DETAIL ON SHEET C2.03
4. INSTALL 1-1/2" RPPA PER DETAIL ON SHEET C2.03
5. INSTALL 1-1/2" DOMESTIC METER PER DETAIL ON SHEET C2.03
6. INSTALL REDUCER (SAME SIZE AS PIPES)
7. INSTALL FIRE HYDRANT W/ GATE VALVE PER UDACS PLATE NO. 40.
8. INSTALL SERVICE SADDLE (SAME SIZE AS PIPE) PER DETAIL ON SHEET C2.03
9. INSTALL GATE VALVE (SAME SIZE AS PIPE) PER UDACS PLATE NO. 30 AND 39.

APPROVED FOR CONSTRUCTION

LAS VEGAS VALLEY WATER DISTRICT ENGINEERING SERVICES MANAGER
PROJECT No. 125376 DATE: 6/14/17

NOTE: ALL LOCATIONS OF UTILITIES SHOWN ARE APPROXIMATE

A.P.N.:

125-19-202-006

BASIS OF BEARINGS:

SOUTH 89°47'00" EAST, BEING THE BEARING OF THE SOUTH LINE OF THE SOUTHWEST QUARTER (SW 1/4) OF THE SOUTHWEST QUARTER (SW 1/4) OF SECTION 19, TOWNSHIP 19 SOUTH, RANGE 60 EAST, M.D.M., ALSO BEING THE CENTERLINE OF CENTENNIAL PARKWAY AS MEASURED BETWEEN HAULAPAI WAY AND CONQUISTADOR STREET AS SHOWN ON FILE 107, PAGE 31 OF SURVEYS IN THE RECORDER'S OFFICE, CLARK COUNTY, NEVADA.

BENCHMARK:

RIVET & PLATE IN TOP OF CURB AT THE SOUTHEAST CORNER OF THE BRIDGE OVER CLARK COUNTY HIGHWAY 215 ON HUALAPAI. ELEVATION – 853.317 (METERS) / 2799.59 (U.S. SURVEY FEET) NORTH AMERICAN VERTICAL DATUM OF 1988

NOTE:

LOCHSA ENGINEERING ASSUMES NO RESPONSIBILITY FOR EXISTING UTILITY LOCATIONS AND ELEVATIONS. THE UTILITIES SHOWN ON THIS PLAN ARE FROM THE BEST AVAILABLE INFORMATION. IT IS THE CONTRACTOR'S RESPONSIBILITY TO FIELD VERIFY THE LOCATION AND ELEVATION OF ALL UTILITIES, INCLUDING BUT NOT LIMITED TO, THE WATER, FIRE, SANITARY SEWER, STORM SEWER, TELEPHONE, POWER, GAS, AND IRRIGATION LINES PRIOR TO THE COMMENCEMENT OF CONSTRUCTION. IF CONFLICT EXISTS IN THE FIELD, THE CONTRACTOR IS TO NOTIFY THE PROJECT ARCHITECT, OWNER'S REPRESENTATIVE AND THE PROJECT ENGINEER IMMEDIATELY.

Call before you Dig
Avoid cutting underground utility lines. It's costly.
CALL 811 or 1-800-227-2600
FAST Call before you Underground 1-702-432-5300
FREEWAY & ARTERIAL SYSTEM OF TRANSPORTATION
Avoid hitting overhead power lines. It's costly.
CALL BEFORE YOU DO OVERHEAD 1-702-227-2929

REV.:	DATE:	BY:	DESCRIPTION:

Lochsa engineering
6345 South Jones Blvd.
Suite 100
Las Vegas, NV 89118
Phone (702) 365-9312
Fax (702) 365-9317
www.lochsa.com

TITLE: UTILITY PLANS SHEET 3 OF 3
DEER SPRINGS AND HUALAPAI
CITY OF LAS VEGAS, NEVADA

SHEET

PROJECT No.:	161109
DATE:	4/25/2017
SCALE:	---
DRAWN BY:	MGZ
DESIGNED BY:	MGZ
CHECKED BY:	JLI

SEAL
PROFESSIONAL ENGINEER – STATE OF NEVADA
TERRY A. JOHNSON
EXP. 12-31-17
CIVIL
No. 11288
5/24/2017

SHEET No. C2.03
SHEET 5 OF 15
CLV No. 69418

PROJ#:125376 AGR:116283 QS:125-19-NW

HTE No. 17-19756

LEGEND

CL OR SURVEY LINE	EASEMENT LINE	DESCRIPTION:	CONTOUR LINES	EDGE OF PAVEMENT	"A" TYPE CURBS	"L" TYPE CURBS	WALLS	FENCES	AC PAVEMENT	CONCRETE	SPOT ELEVATIONS	SIGNS	MANHOLE W/ DESCRIPTION	MANHOLE DESCRIPTIONS	FIRE HYDRANTS	GATE VALVES	REDUCERS	CLEAN OUTS	UTILITY BOX OR VAULT	BACKWATER VALVES	100w HPS STREETLIGHTS	150w HPS STREETLIGHTS	200w HPS STREETLIGHTS	250w HPS STREETLIGHTS
PROPERTY LINE	SAWCUT LINE	EXISTING:	(2210)								(12.34) BC		Ⓢ	Ⓢ = SANITARY SEWER						BWV				
ROW LINE	SCARP LINE	PROPOSED:	2122								12.34 BC		Ⓢ	Ⓓ = STORM DRAIN						BWV				
														Ⓔ = ELECTRICAL										
														Ⓣ = TELEPHONE										

5/26/2017 8:29 AM
J:\CAD\161109\Drawings\Plot Drawings\c-161109-u3-rp-2.dwg

CITY OF LAS VEGAS JURISDICTION | CLARK COUNTY NEVADA JURISDICTION

FOR CONTINUATION SEE SHEET C3.02

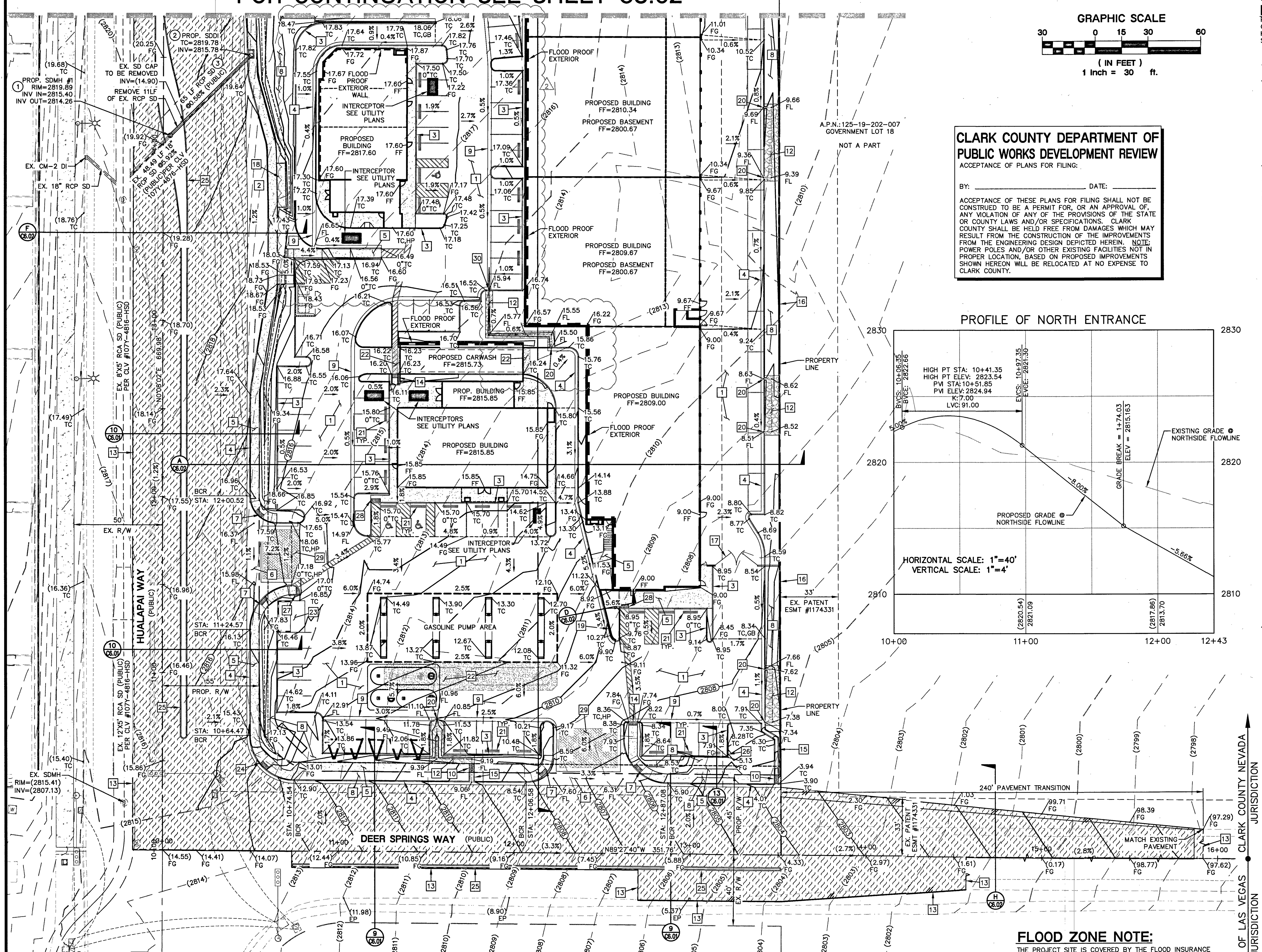

CLARK COUNTY DEPARTMENT OF PUBLIC WORKS DEVELOPMENT REVIEW

ACCEPTANCE OF PLANS FOR FILING:

BY: ______________________ DATE: __________

ACCEPTANCE OF THESE PLANS FOR FILING SHALL NOT BE CONSTRUED TO BE A PERMIT FOR, OR AN APPROVAL OF, ANY VIOLATION OF ANY OF THE PROVISIONS OF THE STATE OR COUNTY LAWS AND/OR SPECIFICATIONS. CLARK COUNTY SHALL BE HELD FREE FROM DAMAGES WHICH MAY RESULT FROM THE CONSTRUCTION OF THE IMPROVEMENTS FROM THE ENGINEERING DESIGN DEPICTED HEREIN. NOTE: POWER POLES AND/OR OTHER EXISTING FACILITIES NOT IN PROPER LOCATION, BASED ON PROPOSED IMPROVEMENTS SHOWN HEREON WILL BE RELOCATED AT NO EXPENSE TO CLARK COUNTY.

GRAPHIC SCALE: 30 0 15 30 60 (IN FEET) 1 inch = 30 ft.

FLOOD ZONE NOTE:

THE PROJECT SITE IS COVERED BY THE FLOOD INSURANCE RATE MAP (FIRM) FOR THE CLARK COUNTY, NEVADA, AND INCORPORATED AREAS, COMMUNITY PANEL NUMBER: 32003C1750E, EFFECTIVE DATE: SEPTEMBER 27, 2002. THE PROJECT SITE FALLS WITHIN ZONE "X"(UNSHADED), DESCRIBED BY FEMA AS: "AREAS DETERMINED TO BE OUTSIDE THE 0.2% ANNUAL CHANCE FLOODPLAIN.

CUT	FILL	NET
19,474.45 CY	3,290.52 CY	16,183.93 CY

NOTE: CUT/FILL QUANTITIES ARE TO FINISHED GRADE & DO NOT INCLUDE MATERIAL THICKNESS'S, FOOTINGS, ETC.

A.P.N.:

125–19–202–006

BASIS OF BEARINGS:

SOUTH 89°47'00" EAST, BEING THE BEARING OF THE SOUTH LINE OF THE SOUTHWEST QUARTER (SW 1/4) OF THE SOUTHWEST QUARTER (SW 1/4) OF SECTION 19, TOWNSHIP 19 SOUTH, RANGE 60 EAST, M.D.M., ALSO BEING THE CENTERLINE OF CENTENNIAL PARKWAY AS MEASURED BETWEEN HAULAPAI WAY AND CONQUISTADOR STREET AS SHOWN ON FILE 107, PAGE 31 OF SURVEYS IN THE RECORDER'S OFFICE, CLARK COUNTY, NEVADA.

BENCHMARK:

RIVET & PLATE IN TOP OF CURB AT THE SOUTHEAST CORNER OF THE BRIDGE OVER CLARK COUNTY HIGHWAY 215 ON HUALAPAI. ELEVATION – 853.317 (METERS) / 2799.59 (U.S. SURVEY FEET) NORTH AMERICAN VERTICAL DATUM OF 1988

STORM DRAIN CONSTRUCTION NOTES:

– NOT ALL NOTES USED ON THIS SHEET –

1. INSTALL 48" TYPE I STORM DRAIN MANHOLE PER C.C.A.U.S.D. No. 403
2. CONSTRUCT 2.5' TYPE "CM2" DROP INLET PER C.C.A.U.S.D. Nos. 412.1 AND 421
3. RCP STORM DRAIN TO BE INSTALLED WITH JOINT GASKETS PER UDACS SECTION 2, PARAGRAPH 2.22.02–D

CONSTRUCTION NOTES:

– ALL CONSTRUCTION TO BE DONE IN ACCORDANCE WITH "CLARK COUNTY AREA UNIFORM STANDARD DRAWINGS (C.C.A.U.S.D.)" LATEST EDITION AND/OR REGULATING ENTITY HAVING JURISDICTION.
– NOT ALL NOTES USED ON THIS SHEET –

1. CONSTRUCT AC PAVEMENT PER DETAIL 3 ON C6.01.
2. CONSTRUCT TYPICAL BUS STOP PER CCAUSD #234.1
3. CONSTRUCT "A" TYPE CURB PER DETAIL 4 SHEET C6.01
4. CONSTRUCT "L" TYPE CURB PER CCAUSD No. 216.
5. CONSTRUCT CONC. SIDEWALK PER CCAUSD No. 234.
6. CONSTRUCT VALLEY GUTTER PER CCAUSD No. 228
7. CONSTRUCT SIDEWALK RAMP CCAUSD No. 235 CASE I.
8. LANDSCAPING – REFER TO LANDSCAPE PLANS FOR SPECIFICATIONS.
9. CONSTRUCT 2' VALLEY GUTTER PER DETAIL 8 ON C6.01
10. CONSTRUCT SIDEWALK DRAIN PER C.C.A.U.S.D. No. 236
11. CONSTRUCT MODIFIED CURB RAMP PER DETAIL 1 ON SHEET C6.01
12. INSTALL RIP RAP SWALES PER DETAIL 5 ON C6.01 WITH CURB CUTS PER DETAIL 6 ON C6.01
13. SAWCUT AND MATCH EXISTING PAVEMENT
14. CONSTRUCT SIDEWALK RAMP PER DETAIL 13 ON C6.02
15. CONSTRUCT CONC. 'U' CHANNEL PER DETAIL 2 ON C6.01
16. PROPOSED WALL BY OTHERS
17. PROPOSED GATE BY OTHERS
18. CONSTRUCT BUS STOP PASSENGER SHELTER PAD PER CCAUSD #234.2
19. RETAINING WALL BY OTHERS
20. CONSTRUCT 2' WIDE CURB OPENING
21. CONSTRUCT PARKING BUMPER PER DETAIL 14 ON C6.02
22. CONSTRUCT CONC. PAVEMENT PER DETAIL 7 ON C6.01
23. PROPOSED TRASH ENCLOSURE PER ARCH. PLANS
24. CONSTRUCT SIDEWALK RAMP PER DETAIL 15 ON C6.02
25. CONSTRUCT "A" TYPE ISLAND CURB PER CCAUSD #219
26. RETAINING WALL WITH HANDRAIL BY OTHERS.
27. CONSTRUCT MODIFIED CURB RAMP PER DETAIL 16 ON SHEET C6.02
28. INSTALL DETECTABLE WARNING (TRUNCATED DOMES) PER CCAUSD No. 235, SHEET 4.
29. INSTALL ENHANCED PAVEMENT PER ARCHITECTURAL DRAWINGS.
30. CONSTRUCT 1' WIDE CURB OPENING

GENERAL GRADING NOTES:

A. PRIOR TO INSTALLATION OF STORM OR SANITARY SEWER, WATER MAIN OR ANY OTHER UTILITIES, THE CONTRACTOR SHALL EXCAVATE, VERIFY, AND CALCULATE ALL POINTS OF CONNECTION AND ALL UTILITY CROSSINGS AND INFORM THE OWNER AND THE ENGINEER OF ANY CONFLICTS OR REQUIRED DEVIATIONS FROM THE PLAN PRIOR TO CONSTRUCTION. NOTIFICATION SHALL BE MADE A MINIMUM OF 72 HOURS PRIOR TO CONSTRUCTION, THE ENGINEER AND ITS CLIENTS SHALL BE HELD HARMLESS IN THE EVENT THAT THE CONTRACTOR FAILS TO MAKE SUCH NOTIFICATION.

B. ALL SLOPES AND AREAS DISTURBED BY CONSTRUCTION SHALL BE GRADED SMOOTH AND FOUR INCHES OF TOPSOIL APPLIED. IF ADEQUATE TOPSOIL IS NOT AVAILABLE ON SITE, THE CONTRACTOR SHALL PROVIDE TOPSOIL, APPROVED BY THE OWNER, AS NEEDED. THE AREA SHALL THEN BE SEEDED/SODDED, FERTILIZED, MULCHED, WATERED AND MAINTAINED UNTIL HARDY GRASS GROWTH IS ESTABLISHED IN ALL AREAS. ANY RELOCATED TREES SHALL BE MAINTAINED UNTIL SUCH POINT AS TREE IS RE–ESTABLISHED. ANY AREAS DISTURBED FOR ANY REASON PRIOR TO FINAL ACCEPTANCE OF THE PROJECT SHALL BE CORRECTED BY THE CONTRACTOR AT NO ADDITIONAL COST TO THE OWNER.

C. THE CONTRACTOR IS SPECIFICALLY CAUTIONED THAT THE LOCATION AND/OR ELEVATION OF EXISTING UTILITIES AS SHOWN ON THESE PLANS IS BASED ON RECORDS OF THE VARIOUS UTILITY COMPANIES, AND WHERE POSSIBLE, MEASUREMENTS TAKEN IN THE FIELD. THE INFORMATION IS NOT TO BE RELIED ON AS BEING EXACT OR COMPLETE. THE CONTRACTOR MUST CALL THE APPROPRIATE UTILITY COMPANY AT LEAST 72 HOURS BEFORE ANY EXCAVATION TO REQUEST EXACT FIELD LOCATION OF UTILITIES.

D. REFER TO GEOTECHNICAL REPORT FOR SPECIFIC SITE SOIL CONDITIONS AND CONSIDERATIONS.

E. CONTRACTOR SHALL COMPLY COMPLETELY WITH THE LATEST STANDARDS OF OSHA DIRECTIVES OR ANY OTHER AGENCY HAVING JURISDICTION FOR EXCAVATION AND TRENCHING PROCEDURES. THE CONTRACTOR SHALL USE SUPPORT SYSTEMS, SLOPING, BENCHING AND OTHER MEANS OF PROTECTION. THIS IS TO INCLUDE, BUT NOT LIMITED FOR ACCESS AND EGRESS FROM ALL EXCAVATION AND TRENCHING. CONTRACTOR IS RESPONSIBLE FOR COMPLYING WITH PERFORMANCE CRITERIA AS REQUIRED BY OSHA.

CITY OF LAS VEGAS JURISDICTION | CLARK COUNTY NEVADA JURISDICTION

GRADING PLAN CERTIFICATION

NAME: PE # DATE

CERTIFY THAT THIS GRADING PLAN IS IN CONFORMANCE WITH APPROVED DRAINAGE STUDY FOR THIS SITE ON FILE AT THE CITY OF LAS VEGAS AND CLARK COUNTY FOR THIS PROJECT. DS#4857/DS#17–10295

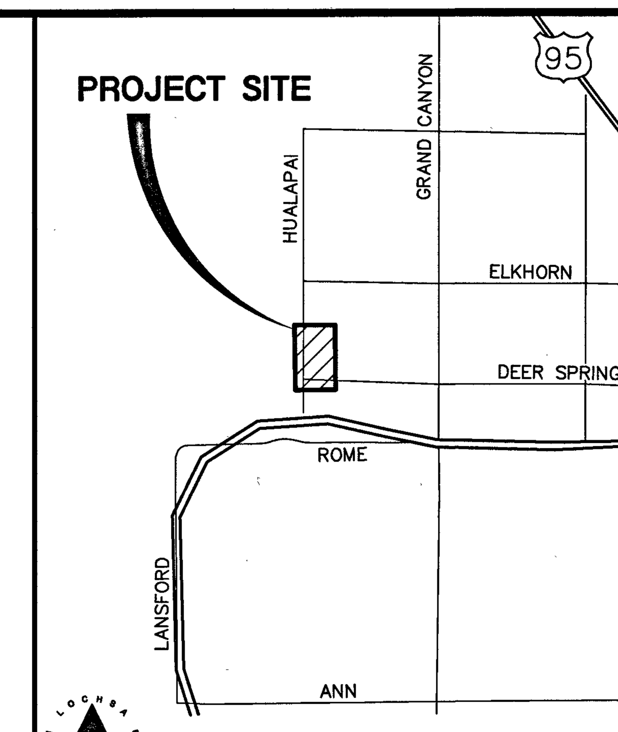

VICINITY MAP

NOT TO SCALE

GRADING NOTES:

1. SLOPES 4:1 OR STEEPER AND FINE–GRAINED MATERIALS THAT HAVE BEEN DISTURBED (SANDY AND SILTY MATERIALS) SHOULD BE PROTECTED WITH BURLAP OR OTHER EROSION CONTROL FABRIC/MATERIAL, UNLESS OTHERWISE SPECIFIED BY LANDSCAPE DRAWINGS AND SPECIFICATIONS OR THE SOILS REPORT.
2. CONTRACTOR SHALL DETERMINE HIS OWN FOOTING OR BASEMENT EXCAVATION QUANTITIES, EVEN THOUGH SHOWN ON ROUGH GRADING PLANS. ADDITIONALLY, STRUCTURE BACKFILL COSTS SHOULD BE INCLUDED IN THE COST OF THE STRUCTURE, UNLESS OTHERWISE SPECIFIED IN THE CONTRACT DOCUMENTS.
3. CONTRACTOR SHALL NOTIFY LOCHSA ENGINEERING WITHIN 24 HOURS OF OMISSIONS AND ERRORS DISCOVERED ON PLANS. LOCHSA ENGINEERING WILL NOT BE RESPONSIBLE FOR ANY "CORRECTIVE" WORK DONE BY OTHERS.
4. CONTRACTOR TO ENSURE POSITIVE DRAINAGE. NO PONDING ALLOWED. CONTRACTOR TO FOLLOW RECOMMENDATIONS AS OUTLINED IN THE PROJECT GEOTECHNICAL REPORT, INCLUDING BUT NOT LIMITED TO EXCAVATION, GRADING AND COMPACTION. REFER TO THE REPORT PREPARED BY: GEOTEK, INC., PROJECT No. 13092–LV, DATED: AUGUST 31, 2016.

LAS VEGAS VALLEY CONSTRUCTION SITE BEST MANAGEMENT PRACTICES GUIDANCE MANUAL SECTION 3.5.1 STANDARD NOTES 1–5

1. THE OWNER, SITE DEVELOPER, CONTRACTOR, AND/OR THEIR AUTHORIZED AGENTS SHALL EACH DAY REMOVE ALL SEDIMENT, MUD, CONSTRUCTION DEBRIS, OR OTHER POTENTIAL POLLUTANTS THAT MAY HAVE BEEN DISCHARGED TO, OR ACCUMULATED IN, THE PUBLIC RIGHT–OF–WAY OF THE _____(INSERT JURISDICTION)_____ AS A RESULT OF CONSTRUCTION ACTIVITIES ASSOCIATED WITH THIS SITE DEVELOPMENT OR CONSTRUCTION PROJECT. SUCH MATERIAL SHALL BE PREVENTED FROM ENTERING THE STORM SEWER SYSTEM.
2. ADDITIONAL CONSTRUCTION SITE DISCHARGE BEST MANAGEMENT PRACTICES MAY BE REQUIRED OF THE OWNER AND HIS OR HER AGENTS DUE TO UNFORESEEN EROSION PROBLEMS OR IF THE SUBMITTED PLAN DOES NOT MEET THE PERFORMANCE STANDARDS SPECIFIED IN THE _____(INSERT JURISDICTION)_____ AND THE LAS VEGAS VALLEY CONSTRUCTION SITE BMP GUIDANCE MANUAL.
3. TEMPORARY OR PERMANENT STABILIZATION PRACTICES WILL BE INSTALLED ON DISTURBED AREAS AS SOON AS PRACTICABLE AND NO LATER THAN 14 DAYS AFTER THE CONSTRUCTION ACTIVITY IN THAT PORTION OF THE SITE HAS TEMPORARILY OR PERMANENTLY CEASED. SOME EXCEPTIONS MAY APPLY; REFER TO THE NEVADA STORMWATER GENERAL PERMIT FOR CONSTRUCTION ACTIVITY NVR10000, SECTION III.A.5.
4. AT A MINIMUM, THE CONTRACTOR OR HIS AGENT SHALL INSPECT ALL DISTURBED AREAS, AREAS USED FOR STORAGE OF MATERIALS AND EQUIPMENT THAT ARE EXPOSED TO PRECIPITATION, VEHICLE ENTRANCE AND EXIT LOCATIONS, AND ALL BMPS WEEKLY, AND WITHIN 24 HOURS AFTER ANY RAIN EVENT OR 0.5 INCHES OR MORE. THE CONTRACTOR OR HIS AGENT SHALL UPDATE OR MODIFY THE STORMWATER POLLUTION PREVENTION PLAN AS NECESSARY. SOME EXCEPTIONS TO WEEKLY INSPECTIONS MAY APPLY, SUCH AS SUSPENSION OF LAND DISTURBANCE ACTIVITIES. REFER TO THE NEVADA STORMWATER GENERAL PERMIT FOR CONSTRUCTION ACTIVITY NVR100000, SECTION III.A.12.
5. ACCUMULATED SEDIMENT IN BMP'S SHALL BE REMOVED WITHIN SEVEN DAYS AFTER A STORMWATER RUNOFF EVENT OR PRIOR TO THE NEXT ANTICIPATED STORM EVENT, WHICHEVER IS EARLIER. SEDIMENT MUST BE REMOVED WHEN BMP DESIGN CAPACITY HAS BEEN REDUCED BY 50 PERCENT OR MORE.

EXISTING UTILITY NOTE:

CONTRACTOR TO ADJUST ALL EXISTING UTILITIES TO MATCH PROPOSED FINISH GRADE ELEVATIONS.

NOTE:

LOCHSA ENGINEERING ASSUMES NO RESPONSIBILITY FOR EXISTING UTILITY LOCATIONS AND ELEVATIONS. THE UTILITIES SHOWN ON THIS PLAN ARE FROM THE BEST AVAILABLE INFORMATION. IT IS THE CONTRACTOR'S RESPONSIBILITY TO FIELD VERIFY THE LOCATION AND ELEVATION OF ALL UTILITIES, INCLUDING BUT NOT LIMITED TO, THE WATER, FIRE, SANITARY SEWER, STORM SEWER, TELEPHONE, POWER, GAS, AND IRRIGATION LINES PRIOR TO THE COMMENCEMENT OF CONSTRUCTION. IF CONFLICT EXISTS IN THE FIELD, THE CONTRACTOR IS TO NOTIFY THE PROJECT ARCHITECT, OWNER'S REPRESENTATIVE AND THE PROJECT ENGINEER IMMEDIATELY.

Call before you Dig. Avoid cutting underground utility lines. It's costly. CALL 811 OR 1-800-227-2600
FAST Call before you Underground 1-702-432-5300 FREEWAY & ARTERIAL SYSTEM OF TRANSPORTATION
Avoid hitting overhead power lines. It's costly. CALL BEFORE YOU DO OVERHEAD 1-702-227-2929

REV.:	DATE:	BY:	DESCRIPTION:
2	3/14/18	JLI	ADDED BUILDING 2 AND REVISED GRADING CLV SB 5/16/18

Lochsa engineering
6345 South Jones Blvd. Suite 100 Las Vegas, NV 89118 Phone (702) 365-9312 Fax (702) 365-9317 www.lochsa.com

SHEET: GRADING PLANS SHEET 1 OF 2

TITLE: DEER SPRINGS AND HUALAPAI CITY OF LAS VEGAS, NEVADA

PROJECT No.: 161109

DATE: APRIL 3, 2018

SCALE: 1"=30'

DRAWN BY: MGZ

DESIGNED BY: MGZ

CHECKED BY: JLI

SEAL: PROFESSIONAL ENGINEER STATE OF NEVADA No. 11286 EXP. 12-31-18 CIVIL 04/03/2018

SHEET No. C3.01 SHEET 6 OF 15

CLV No. 69418 HTE No. 17-19756

LEGEND

CL OR SURVEY LINE	EASEMENT LINE
PROPERTY LINE	SAWCUT LINE
ROW LINE	SCARP LINE

DESCRIPTION:	CONTOUR LINES	EDGE OF PAVEMENT	"A" TYPE CURBS	"L" TYPE CURBS	WALLS	FENCES	AC PAVEMENT	CONCRETE	SPOT ELEVATIONS	SIGNS	MANHOLE W/ DESCRIPTION	FIRE HYDRANTS	GATE VALVES	REDUCERS	CLEAN OUTS	UTILITY BOX OR VAULT	BACKWATER VALVES	100w HPS STREETLIGHTS	150w HPS STREETLIGHTS	200w HPS STREETLIGHTS	250w HPS STREETLIGHTS
EXISTING:	(2210)								(12.34) BC		S						BWV				
PROPOSED:	2122								12.34 BC		S						BWV				

MANHOLE DESCRIPTIONS: S = SANITARY SEWER; D = STORM DRAIN; E = ELECTRICAL; T = TELEPHONE

4/3/2018 1:38 PM T:\CAD\161109\Drawings\Plot Drawings\c-161109-gp.dwg

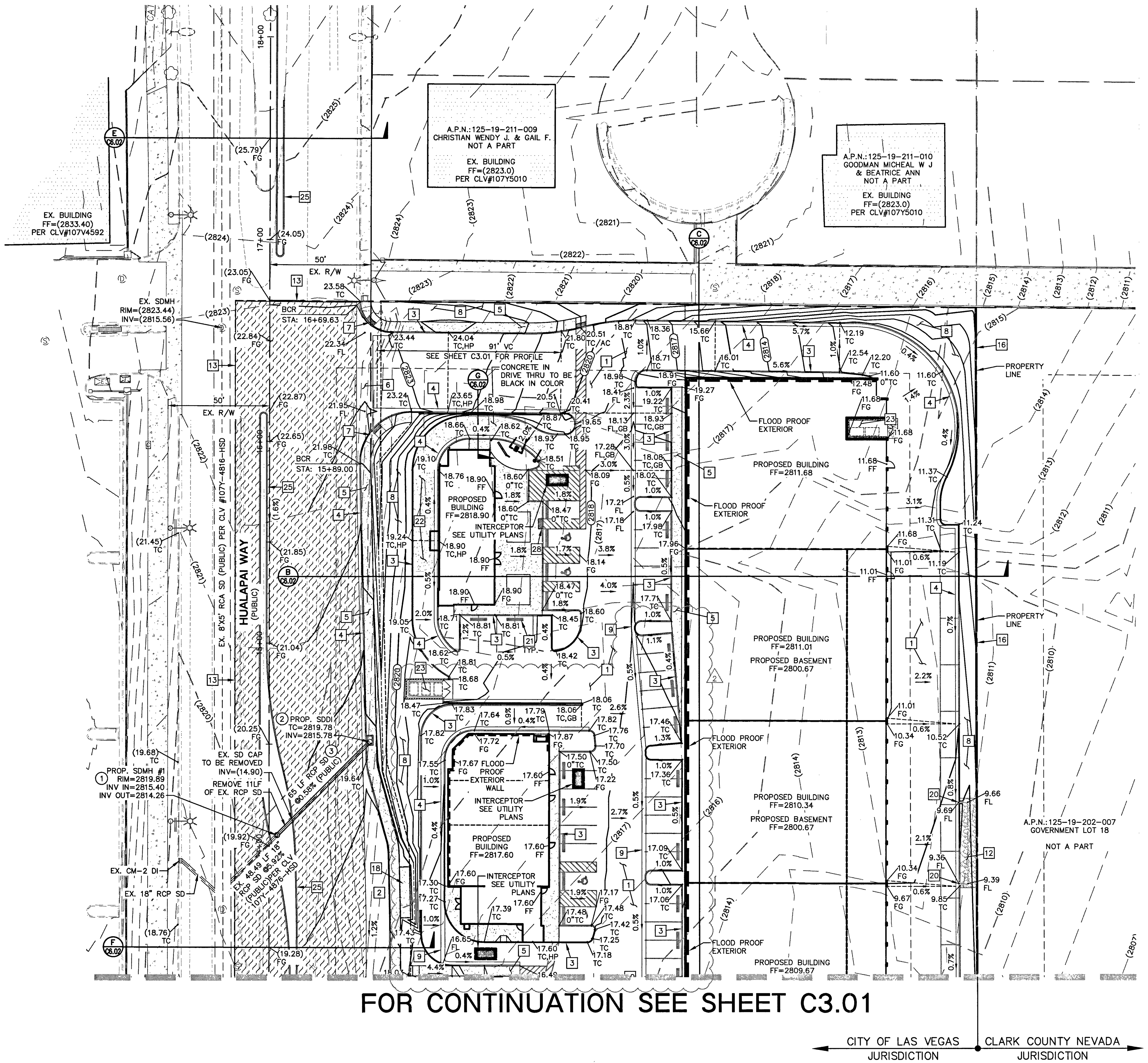

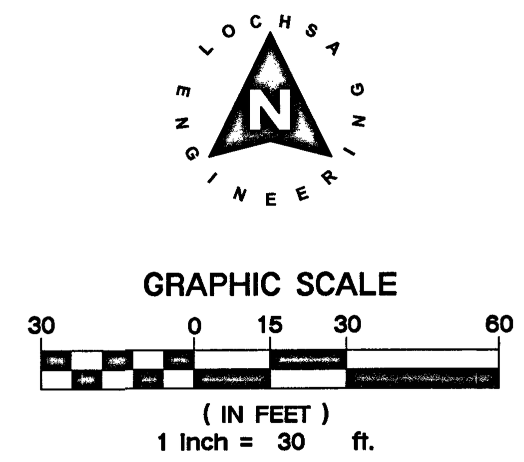

STORM DRAIN CONSTRUCTION NOTES:

– NOT ALL NOTES USED ON THIS SHEET –

1. INSTALL 48" TYPE I STORM DRAIN MANHOLE PER C.C.A.U.S.D. No. 403
2. CONSTRUCT 2.5' TYPE "CM2" DROP INLET PER C.C.A.U.S.D. Nos. 412.1 AND 421
3. RCP STORM DRAIN TO BE INSTALLED WITH JOINT GASKETS PER UDACS SECTION 2, PARAGRAPH 2.22.02–D

CONSTRUCTION NOTES:

– ALL CONSTRUCTION TO BE DONE IN ACCORDANCE WITH "CLARK COUNTY AREA UNIFORM STANDARD DRAWINGS (C.C.A.U.S.D.)" LATEST EDITION AND/OR REGULATING ENTITY HAVING JURISDICTION.
– NOT ALL NOTES USED ON THIS SHEET –

1. CONSTRUCT AC PAVEMENT PER DETAIL 3 ON C6.01.
2. CONSTRUCT TYPICAL BUS STOP PER CCAUSD #234.1
3. CONSTRUCT "A" TYPE CURB PER DETAIL 4 SHEET C6.01
4. CONSTRUCT "L" TYPE CURB PER CCAUSD No. 216.
5. CONSTRUCT CONC. SIDEWALK PER CCAUSD No. 234.
6. CONSTRUCT VALLEY GUTTER PER CCAUSD No. 228
7. CONSTRUCT SIDEWALK RAMP CCAUSD No. 235 CASE I.
8. LANDSCAPING – REFER TO LANDSCAPE PLANS FOR SPECIFICATIONS.
9. CONSTRUCT 2' VALLEY GUTTER PER DETAIL 8 ON C6.01
10. CONSTRUCT SIDEWALK DRAIN PER C.C.A.U.S.D. No. 236
11. CONSTRUCT MODIFIED CURB RAMP PER DETAIL 1 ON SHEET C6.01
12. INSTALL RIP RAP SWALES PER DETAIL 5 ON C6.01 WITH CURB CUTS PER DETAIL 6 ON C6.01
13. SAWCUT AND MATCH EXISTING PAVEMENT
14. CONSTRUCT SIDEWALK RAMP PER DETAIL 13 ON C6.02
15. CONSTRUCT CONC. 'U' CHANNEL PER DETAIL 2 ON C6.01
16. PROPOSED WALL BY OTHERS
17. PROPOSED GATE BY OTHERS
18. CONSTRUCT BUS STOP PASSENGER SHELTER PAD PER CCAUSD #234.2
19. RETAINING WALL BY OTHERS
20. CONSTRUCT 2' WIDE CURB OPENING
21. CONSTRUCT PARKING BUMPER PER DETAIL 14 ON C6.02
22. CONSTRUCT CONC. PAVEMENT PER DETAIL 7 ON C6.01
23. PROPOSED TRASH ENCLOSURE PER ARCH. PLANS
24. CONSTRUCT SIDEWALK RAMP PER DETAIL 15 ON C6.02
25. CONSTRUCT "A" TYPE ISLAND CURB PER CCAUSD #219
26. RETAINING WALL WITH HANDRAIL BY OTHERS.
27. CONSTRUCT MODIFIED CURB RAMP PER DETAIL 16 ON SHEET C6.02
28. INSTALL DETECTABLE WARNING (TRUNCATED DOMES) PER CCAUSD No. 235, SHEET 4.
29. INSTALL ENHANCED PAVEMENT PER ARCHITECTURAL DRAWINGS.
30. CONSTRUCT 1' WIDE CURB OPENING

GENERAL GRADING NOTES:

A. PRIOR TO INSTALLATION OF STORM OR SANITARY SEWER, WATER MAIN OR ANY OTHER UTILITIES, THE CONTRACTOR SHALL EXCAVATE, VERIFY, AND CALCULATE ALL POINTS OF CONNECTION AND ALL UTILITY CROSSINGS AND INFORM THE OWNER AND THE ENGINEER OF ANY CONFLICTS OR REQUIRED DEVIATIONS FROM THE PLAN PRIOR TO CONSTRUCTION. NOTIFICATION SHALL BE MADE A MINIMUM OF 72 HOURS PRIOR TO CONSTRUCTION, THE ENGINEER AND ITS CLIENTS SHALL BE HELD HARMLESS IN THE EVENT THAT THE CONTRACTOR FAILS TO MAKE SUCH NOTIFICATION.

B. ALL SLOPES AND AREAS DISTURBED BY CONSTRUCTION SHALL BE GRADED SMOOTH AND FOUR INCHES OF TOPSOIL APPLIED. IF ADEQUATE TOPSOIL IS NOT AVAILABLE ON SITE, THE CONTRACTOR SHALL PROVIDE TOPSOIL, APPROVED BY THE OWNER, AS NEEDED. THE AREA SHALL THEN BE SEEDED/SODDED, FERTILIZED, MULCHED, WATERED AND MAINTAINED UNTIL HARDY GRASS GROWTH IS ESTABLISHED IN ALL AREAS. ANY RELOCATED TREES SHALL BE MAINTAINED UNTIL SUCH POINT AS TREE IS RE–ESTABLISHED. ANY AREAS DISTURBED FOR ANY REASON PRIOR TO FINAL ACCEPTANCE OF THE PROJECT SHALL BE CORRECTED BY THE CONTRACTOR AT NO ADDITIONAL COST TO THE OWNER.

C. THE CONTRACTOR IS SPECIFICALLY CAUTIONED THAT THE LOCATION AND/OR ELEVATION OF EXISTING UTILITIES AS SHOWN ON THESE PLANS IS BASED ON RECORDS OF THE VARIOUS UTILITY COMPANIES, AND WHERE POSSIBLE, MEASUREMENTS TAKEN IN THE FIELD. THE INFORMATION IS NOT TO BE RELIED ON AS BEING EXACT OR COMPLETE. THE CONTRACTOR MUST CALL THE APPROPRIATE UTILITY COMPANY AT LEAST 72 HOURS BEFORE ANY EXCAVATION TO REQUEST EXACT FIELD LOCATION OF UTILITIES.

D. REFER TO GEOTECHNICAL REPORT FOR SPECIFIC SITE SOIL CONDITIONS AND CONSIDERATIONS.

E. CONTRACTOR SHALL COMPLY COMPLETELY WITH THE LATEST STANDARDS OF OSHA DIRECTIVES OR ANY OTHER AGENCY HAVING JURISDICTION FOR EXCAVATION AND TRENCHING PROCEDURES. THE CONTRACTOR SHALL USE SUPPORT SYSTEMS, SLOPING, BENCHING AND OTHER MEANS OF PROTECTION. THIS IS TO INCLUDE, BUT NOT LIMITED FOR ACCESS AND EGRESS FROM ALL EXCAVATION AND TRENCHING. CONTRACTOR IS RESPONSIBLE FOR COMPLYING WITH PERFORMANCE CRITERIA AS REQUIRED BY OSHA.

A.P.N.:

125–19–202–006

BASIS OF BEARINGS:

SOUTH 89°47'00" EAST, BEING THE BEARING OF THE SOUTH LINE OF THE SOUTHWEST QUARTER (SW 1/4) OF THE SOUTHWEST QUARTER (SW 1/4) OF SECTION 19, TOWNSHIP 19 SOUTH, RANGE 60 EAST, M.D.M., ALSO BEING THE CENTERLINE OF CENTENNIAL PARKWAY AS MEASURED BETWEEN HAULAPAI WAY AND CONQUISTADOR STREET AS SHOWN ON FILE 107, PAGE 31 OF SURVEYS IN THE RECORDER'S OFFICE, CLARK COUNTY, NEVADA.

BENCHMARK:

RIVET & PLATE IN TOP OF CURB AT THE SOUTHEAST CORNER OF THE BRIDGE OVER CLARK COUNTY HIGHWAY 215 ON HUALAPAI. ELEVATION – 853.317 (METERS) / 2799.59 (U.S. SURVEY FEET) NORTH AMERICAN VERTICAL DATUM OF 1988

FLOOD ZONE NOTE:

THE PROJECT SITE IS COVERED BY THE FLOOD INSURANCE RATE MAP (FIRM) FOR THE CLARK COUNTY, NEVADA, AND INCORPORATED AREAS, COMMUNITY PANEL NUMBER: 32003C1750E, EFFECTIVE DATE: SEPTEMBER 27, 2002. THE PROJECT SITE FALLS WITHIN ZONE "X"(UNSHADED), DESCRIBED BY FEMA AS: "AREAS DETERMINED TO BE OUTSIDE THE 0.2% ANNUAL CHANCE FLOODPLAIN.

CUT	FILL	NET
19,474.45 CY	3,290.52 CY	16,183.93 CY

NOTE: CUT/FILL QUANTITIES ARE TO FINISHED GRADE & DO NOT INCLUDE MATERIAL THICKNESS'S, FOOTINGS, ETC.

GRADING PLAN CERTIFICATION

NAME: PE # DATE
(signed) 11280 4/3/18

CERTIFY THAT THIS GRADING PLAN IS IN CONFORMANCE WITH APPROVED DRAINAGE STUDY FOR THIS SITE ON FILE AT THE CITY OF LAS VEGAS FOR THIS PROJECT.

DS#4857

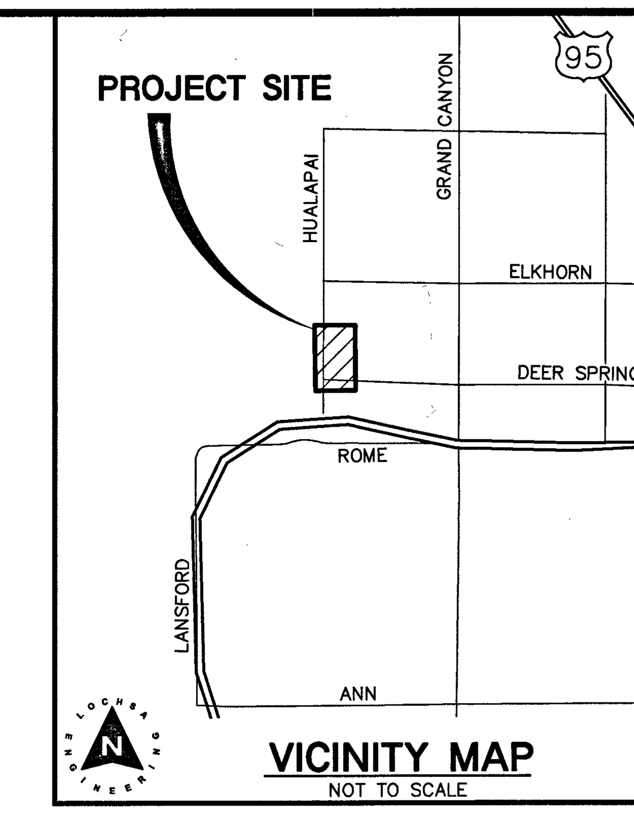

VICINITY MAP

NOT TO SCALE

GRADING NOTES:

1. SLOPES 4:1 OR STEEPER AND FINE–GRAINED MATERIALS THAT HAVE BEEN DISTURBED (SANDY AND SILTY MATERIALS) SHOULD BE PROTECTED WITH BURLAP OR OTHER EROSION CONTROL FABRIC/MATERIAL, UNLESS OTHERWISE SPECIFIED BY LANDSCAPE DRAWINGS AND SPECIFICATIONS OR THE SOILS REPORT.
2. CONTRACTOR SHALL DETERMINE HIS OWN FOOTING OR BASEMENT EXCAVATION QUANTITIES, EVEN THOUGH SHOWN ON ROUGH GRADING PLANS. ADDITIONALLY, STRUCTURE BACKFILL COSTS SHOULD BE INCLUDED IN THE COST OF THE STRUCTURE, UNLESS OTHERWISE SPECIFIED IN THE CONTRACT DOCUMENTS.
3. CONTRACTOR SHALL NOTIFY LOCHSA ENGINEERING WITHIN 24 HOURS OF OMISSIONS AND ERRORS DISCOVERED ON PLANS. LOCHSA ENGINEERING WILL NOT BE RESPONSIBLE FOR ANY "CORRECTIVE" WORK DONE BY OTHERS.
4. CONTRACTOR TO ENSURE POSITIVE DRAINAGE. NO PONDING ALLOWED. CONTRACTOR TO FOLLOW RECOMMENDATIONS AS OUTLINED IN THE PROJECT GEOTECHNICAL REPORT, INCLUDING BUT NOT LIMITED TO EXCAVATION, GRADING AND COMPACTION. REFER TO THE REPORT PREPARED BY: GEOTEK, INC., PROJECT No. 13092–LV, DATED: AUGUST 31, 2016.

LAS VEGAS VALLEY CONSTRUCTION SITE BEST MANAGEMENT PRACTICES GUIDANCE MANUAL SECTION 3.5.1 STANDARD NOTES 1–5

1. THE OWNER, SITE DEVELOPER, CONTRACTOR, AND/OR THEIR AUTHORIZED AGENTS SHALL EACH DAY REMOVE ALL SEDIMENT, MUD, CONSTRUCTION DEBRIS, OR OTHER POTENTIAL POLLUTANTS THAT MAY HAVE BEEN DISCHARGED TO, OR ACCUMULATED IN, THE PUBLIC RIGHT–OF–WAY OF THE _____(INSERT JURISDICTION)_____ AS A RESULT OF CONSTRUCTION ACTIVITIES ASSOCIATED WITH THIS SITE DEVELOPMENT OR CONSTRUCTION PROJECT. SUCH MATERIAL SHALL BE PREVENTED FROM ENTERING THE STORM SEWER SYSTEM.
2. ADDITIONAL CONSTRUCTION SITE DISCHARGE BEST MANAGEMENT PRACTICES MAY BE REQUIRED OF THE OWNER AND HIS OR HER AGENTS DUE TO UNFORESEEN EROSION PROBLEMS OR IF THE SUBMITTED PLAN DOES NOT MEET THE PERFORMANCE STANDARDS SPECIFIED IN THE _____(INSERT JURISDICTION)_____ AND THE LAS VEGAS VALLEY CONSTRUCTION SITE BMP GUIDANCE MANUAL.
3. TEMPORARY OR PERMANENT STABILIZATION PRACTICES WILL BE INSTALLED ON DISTURBED AREAS AS SOON AS PRACTICABLE AND NO LATER THAN 14 DAYS AFTER THE CONSTRUCTION ACTIVITY IN THAT PORTION OF THE SITE HAS TEMPORARILY OR PERMANENTLY CEASED. SOME EXCEPTIONS MAY APPLY; REFER TO THE NEVADA STORMWATER GENERAL PERMIT FOR CONSTRUCTION ACTIVITY NVR10000, SECTION III.A.5.
4. AT A MINIMUM, THE CONTRACTOR OR HIS AGENT SHALL INSPECT ALL DISTURBED AREAS, AREAS USED FOR STORAGE OF MATERIALS AND EQUIPMENT THAT ARE EXPOSED TO PRECIPITATION, VEHICLE ENTRANCE AND EXIT LOCATIONS, AND ALL BMPS WEEKLY, AND WITHIN 24 HOURS AFTER ANY RAIN EVENT OR 0.5 INCHES OR MORE. THE CONTRACTOR OR HIS AGENT SHALL UPDATE OR MODIFY THE STORMWATER POLLUTION PREVENTION PLAN AS NECESSARY. SOME EXCEPTIONS TO WEEKLY INSPECTIONS MAY APPLY, SUCH AS SUSPENSION OF LAND DISTURBANCE ACTIVITIES. REFER TO THE NEVADA STORMWATER GENERAL PERMIT FOR CONSTRUCTION ACTIVITY NVR100000, SECTION III.A.12.
5. ACCUMULATED SEDIMENT IN BMP'S SHALL BE REMOVED WITHIN SEVEN DAYS AFTER A STORMWATER RUNOFF EVENT OR PRIOR TO THE NEXT ANTICIPATED STORM EVENT, WHICHEVER IS EARLIER. SEDIMENT MUST BE REMOVED WHEN BMP DESIGN CAPACITY HAS BEEN REDUCED BY 50 PERCENT OR MORE.

EXISTING UTILITY NOTE:

CONTRACTOR TO ADJUST ALL EXISTING UTILITIES TO MATCH PROPOSED FINISH GRADE ELEVATIONS.

NOTE:

LOCHSA ENGINEERING ASSUMES NO RESPONSIBILITY FOR EXISTING UTILITY LOCATIONS AND ELEVATIONS. THE UTILITIES SHOWN ON THIS PLAN ARE FROM THE BEST AVAILABLE INFORMATION. IT IS THE CONTRACTOR'S RESPONSIBILITY TO FIELD VERIFY THE LOCATION AND ELEVATION OF ALL UTILITIES, INCLUDING BUT NOT LIMITED TO, THE WATER, FIRE, SANITARY SEWER, STORM SEWER, TELEPHONE, POWER, GAS, AND IRRIGATION LINES PRIOR TO THE COMMENCEMENT OF CONSTRUCTION. IF CONFLICT EXISTS IN THE FIELD, THE CONTRACTOR IS TO NOTIFY THE PROJECT ARCHITECT, OWNER'S REPRESENTATIVE AND THE PROJECT ENGINEER IMMEDIATELY.

Call before you Dig
Avoid cutting underground utility lines. It's costly.
CALL 811
OR
1-800-227-2600

FAST
Call before you Dig Underground
1-702-432-5300
FREEWAY & ARTERIAL SYSTEM OF TRANSPORTATION

Avoid hitting overhead power lines. It's costly.
CALL BEFORE YOU DO OVERHEAD
1-702-227-2929

REV.:	DATE:	BY:	DESCRIPTION:
2	3/14/18	JLI	ADDED BUILDING 2 AND REVISED GRADING CLV SB 5/16/18

Lochsa engineering
6345 South Jones Blvd. Suite 100
Las Vegas, NV 89118
Phone (702) 365-9312
Fax (702) 365-9317
www.lochsa.com

SHEET: GRADING PLANS SHEET 2 OF 2

TITLE: DEER SPRINGS AND HUALAPAI CITY OF LAS VEGAS, NEVADA

PROJECT No.: 161109
DATE: APRIL 3, 2018
SCALE: 1"=30'
DRAWN BY: MGZ
DESIGNED BY: MGZ
CHECKED BY: JLI

SEAL
PROFESSIONAL ENGINEER STATE OF NEVADA
No. 11286
CIVIL
EXP. 12-31-18
04/03/2018

107Y5060
L-69418
SHEET No. C3.02
SHEET 7 OF 15
CLV No. 69418
HTE No. 17-19756

4/3/2018 1:38 PM
T:\CAD\161109\Drawings\Plot Drawings\c-161109-gp.dwg

LEGEND

CL OR SURVEY LINE
PROPERTY LINE
ROW LINE
EASEMENT LINE
SAWCUT LINE
SCARP LINE

DESCRIPTION:	CONTOUR LINES	EDGE OF PAVEMENT	"A" TYPE CURBS	"L" TYPE CURBS	WALLS	FENCES	AC PAVEMENT	CONCRETE	SPOT ELEVATIONS	SIGNS	MANHOLE W/ DESCRIPTION	MANHOLE DESCRIPTIONS	FIRE HYDRANTS	GATE VALVES	REDUCERS	CLEAN OUTS	UTILITY BOX OR VAULT	BACKWATER VALVES	100w HPS STREETLIGHTS	150w HPS STREETLIGHTS	200w HPS STREETLIGHTS	250w HPS STREETLIGHTS
EXISTING:	(2210)								(12.34) BC		S	S = SANITARY SEWER; D = STORM DRAIN						BWV				
PROPOSED:	2122								12.34 BC		S	E = ELECTRICAL; T = TELEPHONE						BWV				

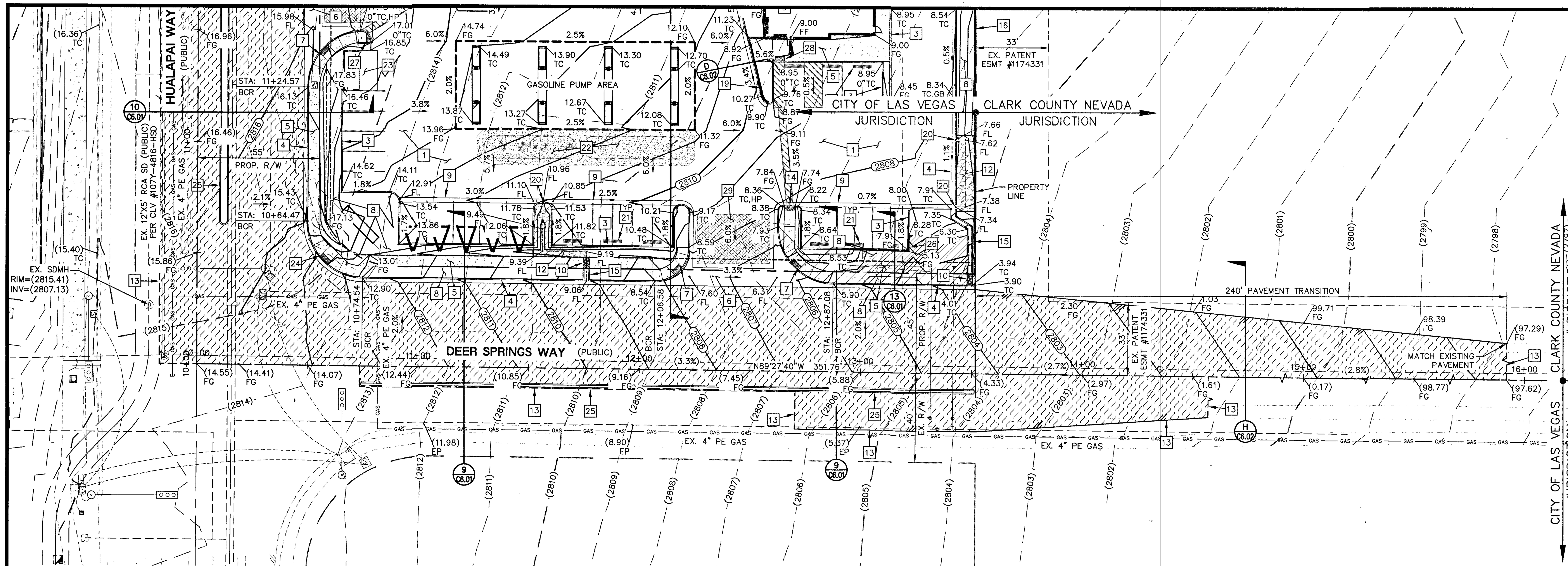

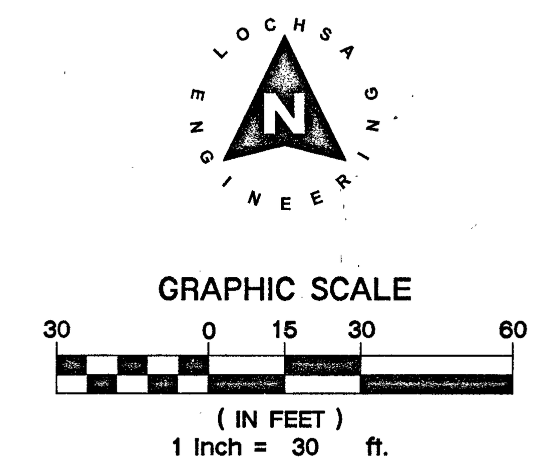

STORM DRAIN CONSTRUCTION NOTES:

– NOT ALL NOTES USED ON THIS SHEET –

1. INSTALL 48" TYPE I STORM DRAIN MANHOLE PER C.C.A.U.S.D. No. 403
2. CONSTRUCT 2.5' TYPE "CM2" DROP INLET PER C.C.A.U.S.D. Nos. 412.1 AND 421
3. RCP STORM DRAIN TO BE INSTALLED WITH JOINT GASKETS PER UDACS SECTION 2, PARAGRAPH 2.22.02–D

CONSTRUCTION NOTES:

– ALL CONSTRUCTION TO BE DONE IN ACCORDANCE WITH "CLARK COUNTY AREA UNIFORM STANDARD DRAWINGS (C.C.A.U.S.D.)" LATEST EDITION AND/OR REGULATING ENTITY HAVING JURISDICTION.
– NOT ALL NOTES USED ON THIS SHEET –

1. CONSTRUCT AC PAVEMENT PER DETAIL 3 ON C6.01.
2. CONSTRUCT TYPICAL BUS STOP PER CCAUSD #234.1
3. CONSTRUCT "A" TYPE CURB PER DETAIL 4 SHEET C6.01
4. CONSTRUCT "L" TYPE CURB PER CCAUSD No. 216.
5. CONSTRUCT CONC. SIDEWALK PER CCAUSD No. 234.
6. CONSTRUCT VALLEY GUTTER PER CCAUSD No. 228
7. CONSTRUCT SIDEWALK RAMP CCAUSD No. 235 CASE I.
8. LANDSCAPING – REFER TO LANDSCAPE PLANS FOR SPECIFICATIONS.
9. CONSTRUCT 2' VALLEY GUTTER PER DETAIL 8 ON C6.01
10. CONSTRUCT SIDEWALK DRAIN PER C.C.A.U.S.D. No. 236
11. CONSTRUCT MODIFIED CURB RAMP PER DETAIL 1 ON SHEET C6.01
12. INSTALL RIP RAP SWALES PER DETAIL 5 ON C6.01 WITH CURB CUTS PER DETAIL 6 ON C6.01
13. SAWCUT AND MATCH EXISTING PAVEMENT
14. CONSTRUCT SIDEWALK RAMP PER DETAIL 13 ON C6.02
15. CONSTRUCT CONC. 'U' CHANNEL PER DETAIL 2 ON C6.01
16. PROPOSED WALL BY OTHERS
17. PROPOSED GATE BY OTHERS
18. CONSTRUCT BUS STOP PASSENGER SHELTER PAD PER CCAUSD #234.2
19. RETAINING WALL BY OTHERS
20. CONSTRUCT 2' WIDE CURB OPENING
21. CONSTRUCT PARKING BUMPER PER DETAIL 14 ON C6.02
22. CONSTRUCT CONC. PAVEMENT PER DETAIL 7 ON C6.01
23. PROPOSED TRASH ENCLOSURE PER ARCH. PLANS
24. CONSTRUCT SIDEWALK RAMP PER DETAIL 15 ON C6.02
25. CONSTRUCT "A" TYPE ISLAND CURB PER CCAUSD #219
26. RETAINING WALL WITH HANDRAIL BY OTHERS.
27. CONSTRUCT MODIFIED CURB RAMP PER DETAIL 16 ON SHEET C6.02
28. INSTALL DETECTABLE WARNING (TRUNCATED DOMES) PER CCAUSD No. 235, SHEET 4.
29. INSTALL ENHANCED PAVEMENT PER ARCHITECTURAL DRAWINGS.

GENERAL GRADING NOTES:

A. PRIOR TO INSTALLATION OF STORM OR SANITARY SEWER, WATER MAIN OR ANY OTHER UTILITIES, THE CONTRACTOR SHALL EXCAVATE, VERIFY, AND CALCULATE ALL POINTS OF CONNECTION AND ALL UTILITY CROSSINGS AND INFORM THE OWNER AND THE ENGINEER OF ANY CONFLICTS OR REQUIRED DEVIATIONS FROM THE PLAN PRIOR TO CONSTRUCTION. NOTIFICATION SHALL BE MADE A MINIMUM OF 72 HOURS PRIOR TO CONSTRUCTION, THE ENGINEER AND ITS CLIENTS SHALL BE HELD HARMLESS IN THE EVENT THAT THE CONTRACTOR FAILS TO MAKE SUCH NOTIFICATION.

B. ALL SLOPES AND AREAS DISTURBED BY CONSTRUCTION SHALL BE GRADED SMOOTH AND FOUR INCHES OF TOPSOIL APPLIED. IF ADEQUATE TOPSOIL IS NOT AVAILABLE ON SITE, THE CONTRACTOR SHALL PROVIDE TOPSOIL, APPROVED BY THE OWNER, AS NEEDED. THE AREA SHALL THEN BE SEEDED/SODDED, FERTILIZED, MULCHED, WATERED AND MAINTAINED UNTIL HARDY GRASS GROWTH IS ESTABLISHED IN ALL AREAS. ANY RELOCATED TREES SHALL BE MAINTAINED UNTIL SUCH POINT AS TREE IS RE–ESTABLISHED. ANY AREAS DISTURBED FOR ANY REASON PRIOR TO FINAL ACCEPTANCE OF THE PROJECT SHALL BE CORRECTED BY THE CONTRACTOR AT NO ADDITIONAL COST TO THE OWNER.

C. THE CONTRACTOR IS SPECIFICALLY CAUTIONED THAT THE LOCATION AND/OR ELEVATION OF EXISTING UTILITIES AS SHOWN ON THESE PLANS IS BASED ON RECORDS OF THE VARIOUS UTILITY COMPANIES, AND WHERE POSSIBLE, MEASUREMENTS TAKEN IN THE FIELD. THE INFORMATION IS NOT TO BE RELIED ON AS BEING EXACT OR COMPLETE. THE CONTRACTOR MUST CALL THE APPROPRIATE UTILITY COMPANY AT LEAST 72 HOURS BEFORE ANY EXCAVATION TO REQUEST EXACT FIELD LOCATION OF UTILITIES.

D. REFER TO GEOTECHNICAL REPORT FOR SPECIFIC SITE SOIL CONDITIONS AND CONSIDERATIONS.

E. CONTRACTOR SHALL COMPLY COMPLETELY WITH THE LATEST STANDARDS OF OSHA DIRECTIVES OR ANY OTHER AGENCY HAVING JURISDICTION FOR EXCAVATION AND TRENCHING PROCEDURES. THE CONTRACTOR SHALL USE SUPPORT SYSTEMS, SLOPING, BENCHING AND OTHER MEANS OF PROTECTION. THIS IS TO INCLUDE, BUT NOT LIMITED FOR ACCESS AND EGRESS FROM ALL EXCAVATION AND TRENCHING. CONTRACTOR IS RESPONSIBLE FOR COMPLYING WITH PERFORMANCE CRITERIA AS REQUIRED BY OSHA.

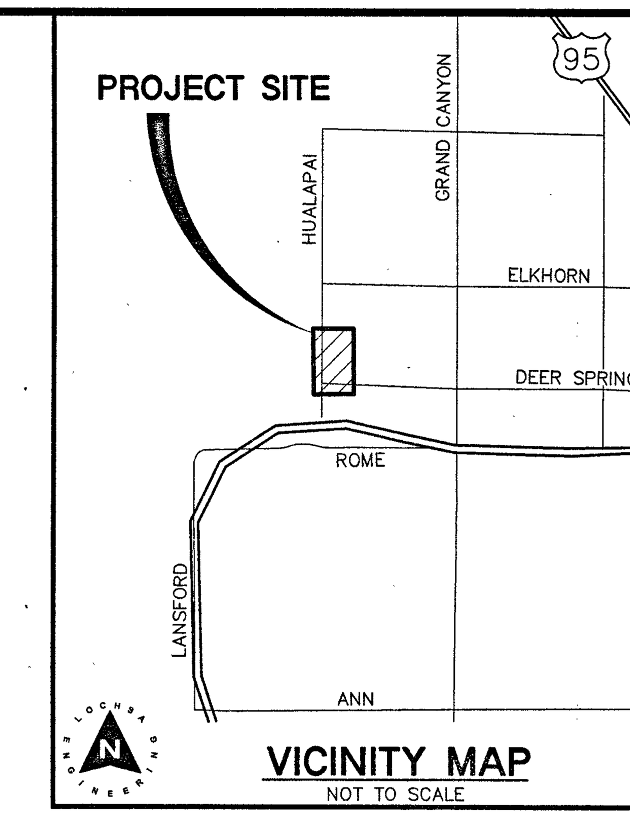

VICINITY MAP

NOT TO SCALE

GRADING NOTES:

1. SLOPES 4:1 OR STEEPER AND FINE–GRAINED MATERIALS THAT HAVE BEEN DISTURBED (SANDY AND SILTY MATERIALS) SHOULD BE PROTECTED WITH BURLAP OR OTHER EROSION CONTROL FABRIC/MATERIAL, UNLESS OTHERWISE SPECIFIED BY LANDSCAPE DRAWINGS AND SPECIFICATIONS OR THE SOILS REPORT.
2. CONTRACTOR SHALL DETERMINE HIS OWN FOOTING OR BASEMENT EXCAVATION QUANTITIES, EVEN THOUGH SHOWN ON ROUGH GRADING PLANS. ADDITIONALLY, STRUCTURE BACKFILL COSTS SHOULD BE INCLUDED IN THE COST OF THE STRUCTURE, UNLESS OTHERWISE SPECIFIED IN THE CONTRACT DOCUMENTS.
3. CONTRACTOR SHALL NOTIFY LOCHSA ENGINEERING WITHIN 24 HOURS OF OMISSIONS AND ERRORS DISCOVERED ON PLANS. LOCHSA ENGINEERING WILL NOT BE RESPONSIBLE FOR ANY "CORRECTIVE" WORK DONE BY OTHERS.
4. CONTRACTOR TO ENSURE POSITIVE DRAINAGE. NO PONDING ALLOWED. CONTRACTOR TO FOLLOW RECOMMENDATIONS AS OUTLINED IN THE PROJECT GEOTECHNICAL REPORT, INCLUDING BUT NOT LIMITED TO EXCAVATION, GRADING AND COMPACTION. REFER TO THE REPORT PREPARED BY: GEOTEK, INC., PROJECT No. 13092–LV, DATED: AUGUST 31, 2016.

LAS VEGAS VALLEY CONSTRUCTION SITE BEST MANAGEMENT PRACTICES GUIDANCE MANUAL SECTION 3.5.1 STANDARD NOTES 1–5

1. THE OWNER, SITE DEVELOPER, CONTRACTOR, AND/OR THEIR AUTHORIZED AGENTS SHALL EACH DAY REMOVE ALL SEDIMENT, MUD, CONSTRUCTION DEBRIS, OR OTHER POTENTIAL POLLUTANTS THAT MAY HAVE BEEN DISCHARGED TO, OR ACCUMULATED IN, THE PUBLIC RIGHT–OF–WAY OF THE _____(INSERT JURISDICTION)_____ AS A RESULT OF CONSTRUCTION ACTIVITIES ASSOCIATED WITH THIS SITE DEVELOPMENT OR CONSTRUCTION PROJECT. SUCH MATERIAL SHALL BE PREVENTED FROM ENTERING THE STORM SEWER SYSTEM.
2. ADDITIONAL CONSTRUCTION SITE DISCHARGE BEST MANAGEMENT PRACTICES MAY BE REQUIRED OF THE OWNER AND HIS OR HER AGENTS DUE TO UNFORESEEN EROSION PROBLEMS OR IF THE SUBMITTED PLAN DOES NOT MEET THE PERFORMANCE STANDARDS SPECIFIED IN THE _____(INSERT JURISDICTION)_____ AND THE LAS VEGAS VALLEY CONSTRUCTION SITE BMP GUIDANCE MANUAL.
3. TEMPORARY OR PERMANENT STABILIZATION PRACTICES WILL BE INSTALLED ON DISTURBED AREAS AS SOON AS PRACTICABLE AND NO LATER THAN 14 DAYS AFTER THE CONSTRUCTION ACTIVITY IN THAT PORTION OF THE SITE HAS TEMPORARILY OR PERMANENTLY CEASED. SOME EXCEPTIONS MAY APPLY; REFER TO THE NEVADA STORMWATER GENERAL PERMIT FOR CONSTRUCTION ACTIVITY NVR10000, SECTION III.A.5.
4. AT A MINIMUM, THE CONTRACTOR OR HIS AGENT SHALL INSPECT ALL DISTURBED AREAS, AREAS USED FOR STORAGE OF MATERIALS AND EQUIPMENT THAT ARE EXPOSED TO PRECIPITATION, VEHICLE ENTRANCE AND EXIT LOCATIONS, AND ALL BMPS WEEKLY, AND WITHIN 24 HOURS AFTER ANY RAIN EVENT OR 0.5 INCHES OR MORE. THE CONTRACTOR OR HIS AGENT SHALL UPDATE OR MODIFY THE STORMWATER POLLUTION PREVENTION PLAN AS NECESSARY. SOME EXCEPTIONS TO WEEKLY INSPECTIONS MAY APPLY, SUCH AS SUSPENSION OF LAND DISTURBANCE ACTIVITIES. REFER TO THE NEVADA STORMWATER GENERAL PERMIT FOR CONSTRUCTION ACTIVITY NVR100000, SECTION III.A.12.
5. ACCUMULATED SEDIMENT IN BMP'S SHALL BE REMOVED WITHIN SEVEN DAYS AFTER A STORMWATER RUNOFF EVENT OR PRIOR TO THE NEXT ANTICIPATED STORM EVENT, WHICHEVER IS EARLIER. SEDIMENT MUST BE REMOVED WHEN BMP DESIGN CAPACITY HAS BEEN REDUCED BY 50 PERCENT OR MORE.

EXISTING UTILITY NOTE:

CONTRACTOR TO ADJUST ALL EXISTING UTILITIES TO MATCH PROPOSED FINISH GRADE ELEVATIONS.

NOTE:

LOCHSA ENGINEERING ASSUMES NO RESPONSIBILITY FOR EXISTING UTILITY LOCATIONS AND ELEVATIONS. THE UTILITIES SHOWN ON THIS PLAN ARE FROM THE BEST AVAILABLE INFORMATION. IT IS THE CONTRACTOR'S RESPONSIBILITY TO FIELD VERIFY THE LOCATION AND ELEVATION OF ALL UTILITIES, INCLUDING BUT NOT LIMITED TO, THE WATER, FIRE, SANITARY SEWER, STORM SEWER, TELEPHONE, POWER, GAS, AND IRRIGATION LINES PRIOR TO THE COMMENCEMENT OF CONSTRUCTION. IF CONFLICT EXISTS IN THE FIELD, THE CONTRACTOR IS TO NOTIFY THE PROJECT ARCHITECT, OWNER'S REPRESENTATIVE AND THE PROJECT ENGINEER IMMEDIATELY.

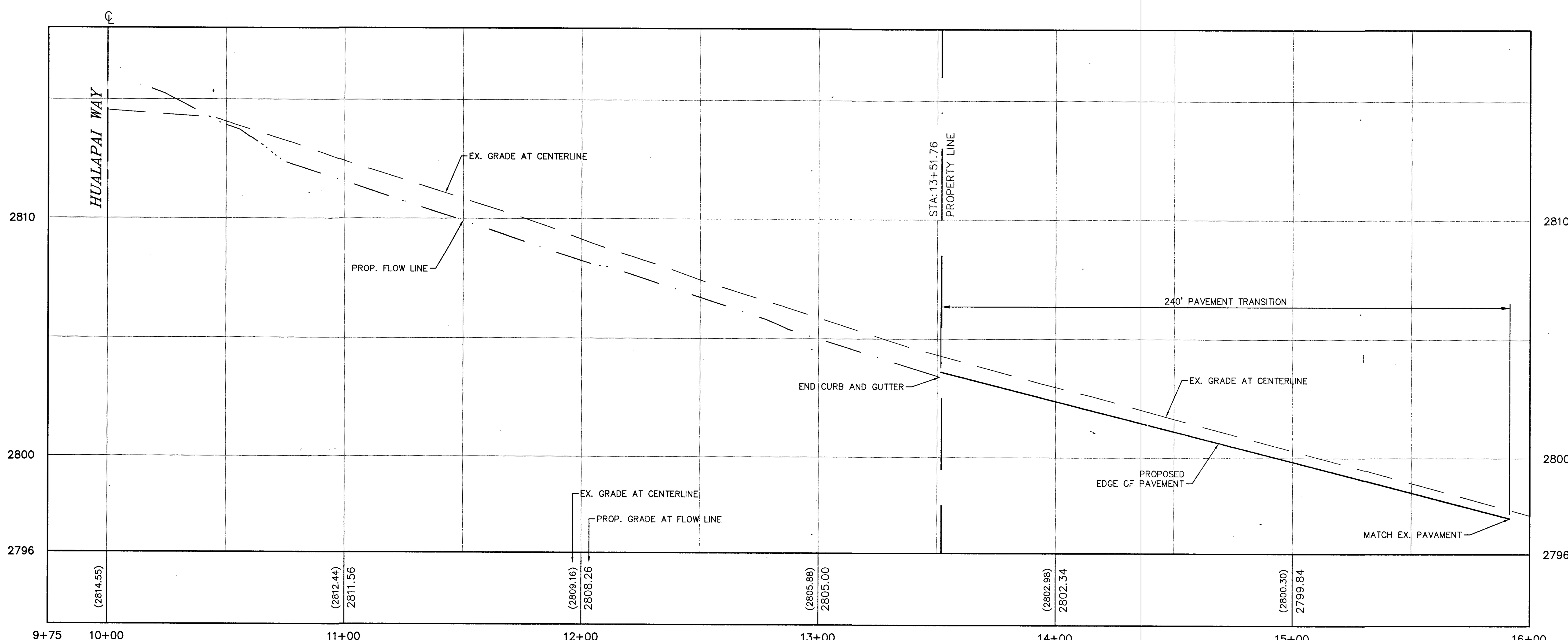

DEER SPRINGS PROFILE VIEW
HORIZONTAL SCALE: 1"=30'
VERTICAL SCALE: 1"=3'

CLARK COUNTY DEPARTMENT OF PUBLIC WORKS DEVELOPMENT REVIEW

ACCEPTANCE OF PLANS FOR FILING:

BY: [signature] DATE: 6·26·17

ACCEPTANCE OF THESE PLANS FOR FILING SHALL NOT BE CONSTRUED TO BE A PERMIT FOR, OR AN APPROVAL OF, ANY VIOLATION OF ANY OF THE PROVISIONS OF THE STATE OR COUNTY LAWS AND/OR SPECIFICATIONS. CLARK COUNTY SHALL BE HELD FREE FROM DAMAGES WHICH MAY RESULT FROM THE CONSTRUCTION OF THE IMPROVEMENTS FROM THE ENGINEERING DESIGN DEPICTED HEREIN. NOTE: POWER POLES AND/OR OTHER EXISTING FACILITIES NOT IN PROPER LOCATION, BASED ON PROPOSED IMPROVEMENTS SHOWN HEREON WILL BE RELOCATED AT NO EXPENSE TO CLARK COUNTY.

A.P.N.:

125–19–202–006

BASIS OF BEARINGS:

SOUTH 89°47'00" EAST, BEING THE BEARING OF THE SOUTH LINE OF THE SOUTHWEST QUARTER (SW 1/4) OF THE SOUTHWEST QUARTER (SW 1/4) OF SECTION 19, TOWNSHIP 19 SOUTH, RANGE 60 EAST, M.D.M., ALSO BEING THE CENTERLINE OF CENTENNIAL PARKWAY AS MEASURED BETWEEN HAULAPAI WAY AND CONQUISTADOR STREET AS SHOWN ON FILE 107, PAGE 31 OF SURVEYS IN THE RECORDER'S OFFICE, CLARK COUNTY, NEVADA.

BENCHMARK:

RIVET & PLATE IN TOP OF CURB AT THE SOUTHEAST CORNER OF THE BRIDGE OVER CLARK COUNTY HIGHWAY 215 ON HUALAPAI. ELEVATION – 853.317 (METERS) / 2799.59 (U.S. SURVEY FEET) NORTH AMERICAN VERTICAL DATUM OF 1988

FLOOD ZONE NOTE:

THE PROJECT SITE IS COVERED BY THE FLOOD INSURANCE RATE MAP (FIRM) FOR THE CLARK COUNTY, NEVADA, AND INCORPORATED AREAS, COMMUNITY PANEL NUMBER: 32003C1750E, EFFECTIVE DATE: SEPTEMBER 27, 2002. THE PROJECT SITE FALLS WITHIN ZONE "X"(UNSHADED), DESCRIBED BY FEMA AS: "AREAS DETERMINED TO BE OUTSIDE THE 0.2% ANNUAL CHANCE FLOODPLAIN.

CUT	FILL	NET
19,474.45 CY	3,290.52 CY	16,183.93 CY

NOTE: CUT/FILL QUANTITIES ARE TO FINISHED GRADE & DO NOT INCLUDE MATERIAL THICKNESS'S, FOOTINGS, ETC.

GRADING PLAN CERTIFICATION

NAME: [signature] PE # 11286 DATE 6/16/17

CERTIFY THAT THIS GRADING PLAN IS IN CONFORMANCE WITH APPROVED DRAINAGE STUDY FOR THIS SITE ON FILE AT THE CITY OF LAS VEGAS FOR THIS PROJECT.

DS#4857

Call before you Dig
Avoid cutting underground utility lines. It's costly.
CALL 811 OR 1-800-227-2600

FAST
Call before you Underground
1-702-432-5300
FREEWAY & ARTERIAL SYSTEM OF TRANSPORTATION

Avoid hitting overhead power lines. It's costly.
CALL BEFORE YOU DO OVERHEAD
1-702-227-2929

LEGEND

CL OR SURVEY LINE
PROPERTY LINE
ROW LINE
EASEMENT LINE
SAWCUT LINE
SCARP LINE

DESCRIPTION:	CONTOUR LINES	EDGE OF PAVEMENT	"A" TYPE CURBS	"L" TYPE CURBS	WALLS	FENCES	AC PAVEMENT	CONCRETE	SPOT ELEVATIONS	SIGNS	MANHOLE W/ DESCRIPTION	MANHOLE DESCRIPTIONS	FIRE HYDRANTS	GATE VALVES	REDUCERS	CLEAN OUTS	UTILITY BOX OR VAULT	BACKWATER VALVES	100w HPS STREETLIGHTS	150w HPS STREETLIGHTS	200w HPS STREETLIGHTS	250w HPS STREETLIGHTS
EXISTING:	(2210)								(12.34) BC		Ⓢ	Ⓢ = SANITARY SEWER Ⓓ = STORM DRAIN						BWV				
PROPOSED:	2122								12.34 BC		Ⓢ	Ⓔ = ELECTRICAL Ⓣ = TELEPHONE						BWV				

Lochsa engineering
6345 South Jones Blvd.
Suite 100
Las Vegas, NV 89118
Phone (702) 365-9312
Fax (702) 365-9317
www.lochsa.com.

REV.:	DATE:	BY:	DESCRIPTION:

SHEET: PLAN AND PROFILES DEER SPRINGS WAY

TITLE: DEER SPRINGS AND HUALAPAI CITY OF LAS VEGAS, NEVADA

PROJECT No.: 161109
DATE: 4/25/2017
SCALE: 1"=30'
DRAWN BY: MGZ
DESIGNED BY: MGZ
CHECKED BY: JLI

SEAL: PROFESSIONAL ENGINEER – STATE OF NEVADA – ED T. EGERTON – CIVIL – No. 11286 – 5/24/2017

SHEET No. C4.01 (10TY506D)
SHEET 8 OF 15
CLV No. 69418
HTE No. 17-19756

6/14/2017 2:08 PM
T:\CAD\161109\Drawings\Plot Drawings\c-161109-PP.dwg

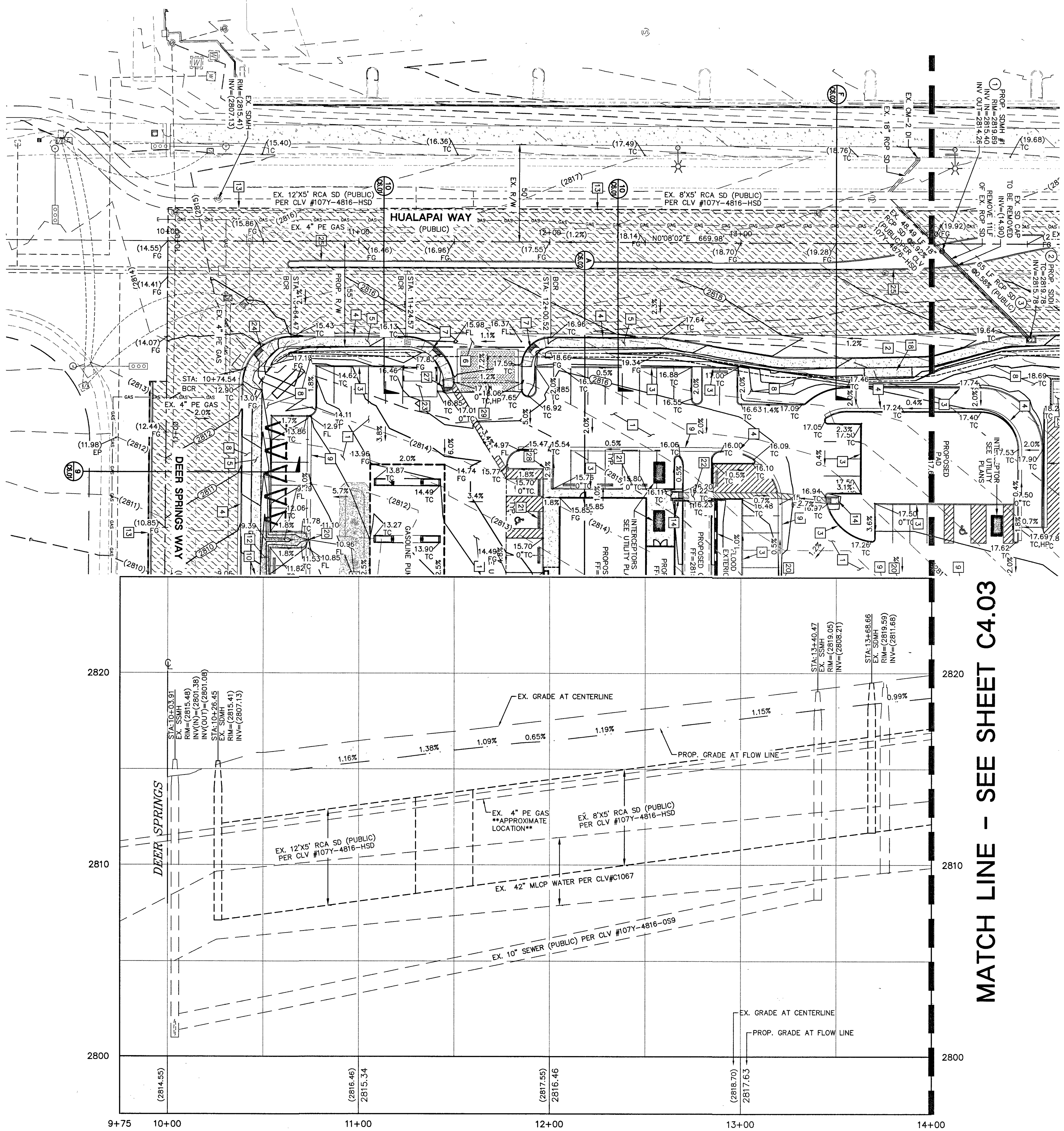

HUALAPAI PROFILE VIEW
HORIZONTAL SCALE: 1"=30'
VERTICAL SCALE: 1"=3'

GRAPHIC SCALE
30 0 15 30 60
(IN FEET)
1 inch = 30 ft.

STORM DRAIN CONSTRUCTION NOTES:

– NOT ALL NOTES USED ON THIS SHEET –

1. INSTALL 48" TYPE I STORM DRAIN MANHOLE PER C.C.A.U.S.D. No. 403
2. CONSTRUCT 2.5' TYPE "CM2" DROP INLET PER C.C.A.U.S.D. Nos. 412.1 AND 421
3. RCP STORM DRAIN TO BE INSTALLED WITH JOINT GASKETS PER UDACS SECTION 2, PARAGRAPH 2.22.02–D

CONSTRUCTION NOTES:

– ALL CONSTRUCTION TO BE DONE IN ACCORDANCE WITH "CLARK COUNTY AREA UNIFORM STANDARD DRAWINGS (C.C.A.U.S.D.)" LATEST EDITION AND/OR REGULATING ENTITY HAVING JURISDICTION.
– NOT ALL NOTES USED ON THIS SHEET –

[1] CONSTRUCT AC PAVEMENT PER DETAIL 3 ON C6.01.
[2] CONSTRUCT TYPICAL BUS STOP PER CCAUSD #234.1
[3] CONSTRUCT "A" TYPE CURB PER DETAIL 4 SHEET C6.01
[4] CONSTRUCT "L" TYPE CURB PER CCAUSD No. 216.
[5] CONSTRUCT CONC. SIDEWALK PER CCAUSD No. 234.
[6] CONSTRUCT VALLEY GUTTER PER CCAUSD No. 228
[7] CONSTRUCT SIDEWALK RAMP CCAUSD No. 235 CASE I.
[8] LANDSCAPING – REFER TO LANDSCAPE PLANS FOR SPECIFICATIONS.
[9] CONSTRUCT 2' VALLEY GUTTER PER DETAIL 8 ON C6.01
[10] CONSTRUCT SIDEWALK DRAIN PER C.C.A.U.S.D. No. 236
[11] CONSTRUCT MODIFIED CURB RAMP PER DETAIL 1 ON SHEET C6.01
[12] INSTALL RIP RAP SWALES PER DETAIL 5 ON C6.01 WITH CURB CUTS PER DETAIL 6 ON C6.01
[13] SAWCUT AND MATCH EXISTING PAVEMENT
[14] CONSTRUCT SIDEWALK RAMP PER DETAIL 13 ON C6.02
[15] CONSTRUCT CONC. 'U' CHANNEL PER DETAIL 2 ON C6.01
[16] PROPOSED WALL BY OTHERS
[17] PROPOSED GATE BY OTHERS
[18] CONSTRUCT BUS STOP PASSENGER SHELTER PAD PER CCAUSD #234.2
[19] RETAINING WALL BY OTHERS
[20] CONSTRUCT 2' WIDE CURB OPENING
[21] CONSTRUCT PARKING BUMPER PER DETAIL 14 ON C6.02
[22] CONSTRUCT CONC. PAVEMENT PER DETAIL 7 ON C6.01
[23] PROPOSED TRASH ENCLOSURE PER ARCH. PLANS
[24] CONSTRUCT SIDEWALK RAMP PER DETAIL 15 ON C6.02
[25] CONSTRUCT "A" TYPE ISLAND CURB PER CCAUSD #219
[26] RETAINING WALL WITH HANDRAIL BY OTHERS.
[27] CONSTRUCT MODIFIED CURB RAMP PER DETAIL 16 ON SHEET C6.02
[28] INSTALL DETECTABLE WARNING (TRUNCATED DOMES) PER CCAUSD No. 235, SHEET 4.
[29] INSTALL ENHANCED PAVEMENT PER ARCHITECTURAL DRAWINGS.

GENERAL GRADING NOTES:

A. PRIOR TO INSTALLATION OF STORM OR SANITARY SEWER, WATER MAIN OR ANY OTHER UTILITIES, THE CONTRACTOR SHALL EXCAVATE, VERIFY, AND CALCULATE ALL POINTS OF CONNECTION AND ALL UTILITY CROSSINGS AND INFORM THE OWNER AND THE ENGINEER OF ANY CONFLICTS OR REQUIRED DEVIATIONS FROM THE PLAN PRIOR TO CONSTRUCTION. NOTIFICATION SHALL BE MADE A MINIMUM OF 72 HOURS PRIOR TO CONSTRUCTION, THE ENGINEER AND ITS CLIENTS SHALL BE HELD HARMLESS IN THE EVENT THAT THE CONTRACTOR FAILS TO MAKE SUCH NOTIFICATION.

B. ALL SLOPES AND AREAS DISTURBED BY CONSTRUCTION SHALL BE GRADED SMOOTH AND FOUR INCHES OF TOPSOIL APPLIED. IF ADEQUATE TOPSOIL IS NOT AVAILABLE ON SITE, THE CONTRACTOR SHALL PROVIDE TOPSOIL, APPROVED BY THE OWNER, AS NEEDED. THE AREA SHALL THEN BE SEEDED/SODDED, FERTILIZED, MULCHED, WATERED AND MAINTAINED UNTIL HARDY GRASS GROWTH IS ESTABLISHED IN ALL AREAS. ANY RELOCATED TREES SHALL BE MAINTAINED UNTIL SUCH POINT AS TREE IS RE-ESTABLISHED. ANY AREAS DISTURBED FOR ANY REASON PRIOR TO FINAL ACCEPTANCE OF THE PROJECT SHALL BE CORRECTED BY THE CONTRACTOR AT NO ADDITIONAL COST TO THE OWNER.

C. THE CONTRACTOR IS SPECIFICALLY CAUTIONED THAT THE LOCATION AND/OR ELEVATION OF EXISTING UTILITIES AS SHOWN ON THESE PLANS IS BASED ON RECORDS OF THE VARIOUS UTILITY COMPANIES, AND WHERE POSSIBLE, MEASUREMENTS TAKEN IN THE FIELD. THE INFORMATION IS NOT TO BE RELIED ON AS BEING EXACT OR COMPLETE. THE CONTRACTOR MUST CALL THE APPROPRIATE UTILITY COMPANY AT LEAST 72 HOURS BEFORE ANY EXCAVATION TO REQUEST EXACT FIELD LOCATION OF UTILITIES.

D. REFER TO GEOTECHNICAL REPORT FOR SPECIFIC SITE SOIL CONDITIONS AND CONSIDERATIONS.

E. CONTRACTOR SHALL COMPLY COMPLETELY WITH THE LATEST STANDARDS OF OSHA DIRECTIVES OR ANY OTHER AGENCY HAVING JURISDICTION FOR EXCAVATION AND TRENCHING PROCEDURES. THE CONTRACTOR SHALL USE SUPPORT SYSTEMS, SLOPING, BENCHING AND OTHER MEANS OF PROTECTION. THIS IS TO INCLUDE, BUT NOT LIMITED FOR ACCESS AND EGRESS FROM ALL EXCAVATION AND TRENCHING. CONTRACTOR IS RESPONSIBLE FOR COMPLYING WITH PERFORMANCE CRITERIA AS REQUIRED BY OSHA.

A.P.N.:
125–19–202–006

BASIS OF BEARINGS:
SOUTH 89°47'00" EAST, BEING THE BEARING OF THE SOUTH LINE OF THE SOUTHWEST QUARTER (SW 1/4) OF THE SOUTHWEST QUARTER (SW 1/4) OF SECTION 19, TOWNSHIP 19 SOUTH, RANGE 60 EAST, M.D.M., ALSO BEING THE CENTERLINE OF CENTENNIAL PARKWAY AS MEASURED BETWEEN HAULAPAI WAY AND CONQUISTADOR STREET AS SHOWN ON FILE 107, PAGE 31 OF SURVEYS IN THE RECORDER'S OFFICE, CLARK COUNTY, NEVADA.

BENCHMARK:
RIVET & PLATE IN TOP OF CURB AT THE SOUTHEAST CORNER OF THE BRIDGE OVER CLARK COUNTY HIGHWAY 215 ON HUALAPAI. ELEVATION – 853.317 (METERS) / 2799.59 (U.S. SURVEY FEET) NORTH AMERICAN VERTICAL DATUM OF 1988

FLOOD ZONE NOTE:
THE PROJECT SITE IS COVERED BY THE FLOOD INSURANCE RATE MAP (FIRM) FOR THE CLARK COUNTY, NEVADA, AND INCORPORATED AREAS, COMMUNITY PANEL NUMBER: 32003C1750E, EFFECTIVE DATE: SEPTEMBER 27, 2002. THE PROJECT SITE FALLS WITHIN ZONE "X"(UNSHADED), DESCRIBED BY FEMA AS: "AREAS DETERMINED TO BE OUTSIDE THE 0.2% ANNUAL CHANCE FLOODPLAIN.

CUT	FILL	NET
19,474.45 CY	3,290.52 CY	16,183.93 CY

NOTE: CUT/FILL QUANTITIES ARE TO FINISHED GRADE & DO NOT INCLUDE MATERIAL THICKNESS'S, FOOTINGS, ETC.

GRADING PLAN CERTIFICATION
NAME: Ted (signature) PE # 11286 DATE 5/24/17
CERTIFY THAT THIS GRADING PLAN IS IN CONFORMANCE WITH APPROVED DRAINAGE STUDY FOR THIS SITE ON FILE AT THE CITY OF LAS VEGAS FOR THIS PROJECT.
DS#4857

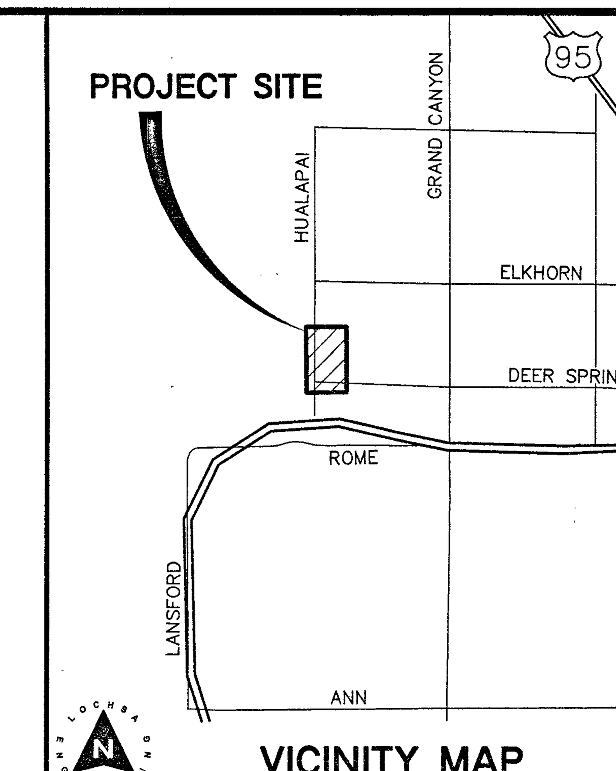

VICINITY MAP
NOT TO SCALE

GRADING NOTES:

1. SLOPES 4:1 OR STEEPER AND FINE-GRAINED MATERIALS THAT HAVE BEEN DISTURBED (SANDY AND SILTY MATERIALS) SHOULD BE PROTECTED WITH BURLAP OR OTHER EROSION CONTROL FABRIC/MATERIAL, UNLESS OTHERWISE SPECIFIED BY LANDSCAPE DRAWINGS AND SPECIFICATIONS OR THE SOILS REPORT.
2. CONTRACTOR SHALL DETERMINE HIS OWN FOOTING OR BASEMENT EXCAVATION QUANTITIES, EVEN THOUGH SHOWN ON ROUGH GRADING PLANS. ADDITIONALLY, STRUCTURE BACKFILL COSTS SHOULD BE INCLUDED IN THE COST OF THE STRUCTURE, UNLESS OTHERWISE SPECIFIED IN THE CONTRACT DOCUMENTS.
3. CONTRACTOR SHALL NOTIFY LOCHSA ENGINEERING WITHIN 24 HOURS OF OMISSIONS AND ERRORS DISCOVERED ON PLANS. LOCHSA ENGINEERING WILL NOT BE RESPONSIBLE FOR ANY "CORRECTIVE" WORK DONE BY OTHERS.
4. CONTRACTOR TO ENSURE POSITIVE DRAINAGE. NO PONDING ALLOWED. CONTRACTOR TO FOLLOW RECOMMENDATIONS AS OUTLINED IN THE PROJECT GEOTECHNICAL REPORT, INCLUDING BUT NOT LIMITED TO EXCAVATION, GRADING AND COMPACTION. REFER TO THE REPORT PREPARED BY: GEOTEK, INC., PROJECT No. 13092–LV, DATED: AUGUST 31, 2016.

LAS VEGAS VALLEY CONSTRUCTION SITE BEST MANAGEMENT PRACTICES GUIDANCE MANUAL SECTION 3.5.1 STANDARD NOTES 1–5

1. THE OWNER, SITE DEVELOPER, CONTRACTOR, AND/OR THEIR AUTHORIZED AGENTS SHALL EACH DAY REMOVE ALL SEDIMENT, MUD, CONSTRUCTION DEBRIS, OR OTHER POTENTIAL POLLUTANTS THAT MAY HAVE BEEN DISCHARGED TO, OR ACCUMULATED IN, THE PUBLIC RIGHT-OF-WAY OF THE _____(INSERT JURISDICTION)_____ AS A RESULT OF CONSTRUCTION ACTIVITIES ASSOCIATED WITH THIS SITE DEVELOPMENT OR CONSTRUCTION PROJECT. SUCH MATERIAL SHALL BE PREVENTED FROM ENTERING THE STORM SEWER SYSTEM.
2. ADDITIONAL CONSTRUCTION SITE DISCHARGE BEST MANAGEMENT PRACTICES MAY BE REQUIRED OF THE OWNER AND HIS OR HER AGENTS DUE TO UNFORESEEN EROSION PROBLEMS OR IF THE SUBMITTED PLAN DOES NOT MEET THE PERFORMANCE STANDARDS SPECIFIED IN THE _____(INSERT JURISDICTION)_____ AND THE LAS VEGAS VALLEY CONSTRUCTION SITE BMP GUIDANCE MANUAL.
3. TEMPORARY OR PERMANENT STABILIZATION PRACTICES WILL BE INSTALLED ON DISTURBED AREAS AS SOON AS PRACTICABLE AND NO LATER THAN 14 DAYS AFTER THE CONSTRUCTION ACTIVITY IN THAT PORTION OF THE SITE HAS TEMPORARILY OR PERMANENTLY CEASED. SOME EXCEPTIONS MAY APPLY; REFER TO THE NEVADA STORMWATER GENERAL PERMIT FOR CONSTRUCTION ACTIVITY NVR10000, SECTION III.A.5.
4. AT A MINIMUM, THE CONTRACTOR OR HIS AGENT SHALL INSPECT ALL DISTURBED AREAS, AREAS USED FOR STORAGE OF MATERIALS AND EQUIPMENT THAT ARE EXPOSED TO PRECIPITATION, VEHICLE ENTRANCE AND EXIT LOCATIONS, AND ALL BMPS WEEKLY, AND WITHIN 24 HOURS AFTER ANY RAIN EVENT OR 0.5 INCHES OR MORE. THE CONTRACTOR OR HIS AGENT SHALL UPDATE OR MODIFY THE STORMWATER POLLUTION PREVENTION PLAN AS NECESSARY. SOME EXCEPTIONS TO WEEKLY INSPECTIONS MAY APPLY, SUCH AS SUSPENSION OF LAND DISTURBANCE ACTIVITIES. REFER TO THE NEVADA STORMWATER GENERAL PERMIT FOR CONSTRUCTION ACTIVITY NVR100000, SECTION III.A.12.
5. ACCUMULATED SEDIMENT IN BMP'S SHALL BE REMOVED WITHIN SEVEN DAYS AFTER A STORMWATER RUNOFF EVENT OR PRIOR TO THE NEXT ANTICIPATED STORM EVENT, WHICHEVER IS EARLIER. SEDIMENT MUST BE REMOVED WHEN BMP DESIGN CAPACITY HAS BEEN REDUCED BY 50 PERCENT OR MORE.

EXISTING UTILITY NOTE:
CONTRACTOR TO ADJUST ALL EXISTING UTILITIES TO MATCH PROPOSED FINISH GRADE ELEVATIONS.

NOTE:
LOCHSA ENGINEERING ASSUMES NO RESPONSIBILITY FOR EXISTING UTILITY LOCATIONS AND ELEVATIONS. THE UTILITIES SHOWN ON THIS PLAN ARE FROM THE BEST AVAILABLE INFORMATION. IT IS THE CONTRACTOR'S RESPONSIBILITY TO FIELD VERIFY THE LOCATION AND ELEVATION OF ALL UTILITIES, INCLUDING BUT NOT LIMITED TO, THE WATER, FIRE, SANITARY SEWER, STORM SEWER, TELEPHONE, POWER, GAS, AND IRRIGATION LINES PRIOR TO THE COMMENCEMENT OF CONSTRUCTION. IF CONFLICT EXISTS IN THE FIELD, THE CONTRACTOR IS TO NOTIFY THE PROJECT ARCHITECT, OWNER'S REPRESENTATIVE AND THE PROJECT ENGINEER IMMEDIATELY.

Call before you Dig Avoid cutting underground utility lines. It's costly. CALL 811 OR 1-800-227-2600

FAST Call before you Underground 1-702-432-5300 FREEWAY & ARTERIAL SYSTEM OF TRANSPORTATION

Avoid hitting overhead power lines. It's costly. CALL BEFORE YOU DO OVERHEAD 1-702-227-2929

REV.:	DATE:	BY:	DESCRIPTION:

Lochsa engineering
6345 South Jones Blvd.
Suite 100
Las Vegas, NV 89118
Phone (702) 365-9312
Fax (702) 365-9317
www.lochsa.com

SHEET: PLAN AND PROFILES HUALAPAI WAY (SHEET 1 OF 2)
TITLE: DEER SPRINGS AND HUALAPAI CITY OF LAS VEGAS, NEVADA

PROJECT No.: 161109
DATE: 4/25/2017
SCALE: 1"=30'
DRAWN BY: MGZ
DESIGNED BY: MGZ
CHECKED BY: JLI

SEAL: PROFESSIONAL ENGINEER – STATE OF NEVADA, TED ... CIVIL No. 11286, 5/24/2017

SHEET No. C4.02 (10745060)
SHEET 9 OF 15
CLV No. 69418

LEGEND																						
CL OR SURVEY LINE / PROPERTY LINE / ROW LINE	EASEMENT LINE / SAWCUT LINE / SCARP LINE	DESCRIPTION:	CONTOUR LINES	EDGE OF PAVEMENT	"A" TYPE CURBS	"L" TYPE CURBS	WALLS	FENCES	AC PAVEMENT	CONCRETE	SPOT ELEVATIONS	SIGNS	MANHOLE W/ DESCRIPTION	MANHOLE DESCRIPTIONS: Ⓢ = SANITARY SEWER, Ⓓ = STORM DRAIN, Ⓔ = ELECTRICAL, Ⓣ = TELEPHONE	FIRE HYDRANTS	GATE VALVES	REDUCERS	CLEAN OUTS	UTILITY BOX OR VAULT	BACKWATER VALVES	100w HPS STREETLIGHTS	150w HPS STREETLIGHTS / 200w HPS STREETLIGHTS / 250w HPS STREETLIGHTS
		EXISTING:	(2210)								(12.34) BC		Ⓢ							BWV		
		PROPOSED:	2122								12.34 BC		Ⓢ							BWV		

5/28/2017 8:31 AM
T:\CAD\161109\Drawings\Plot Drawings\c-161109-PP.dwg

HTE No. 17-19756

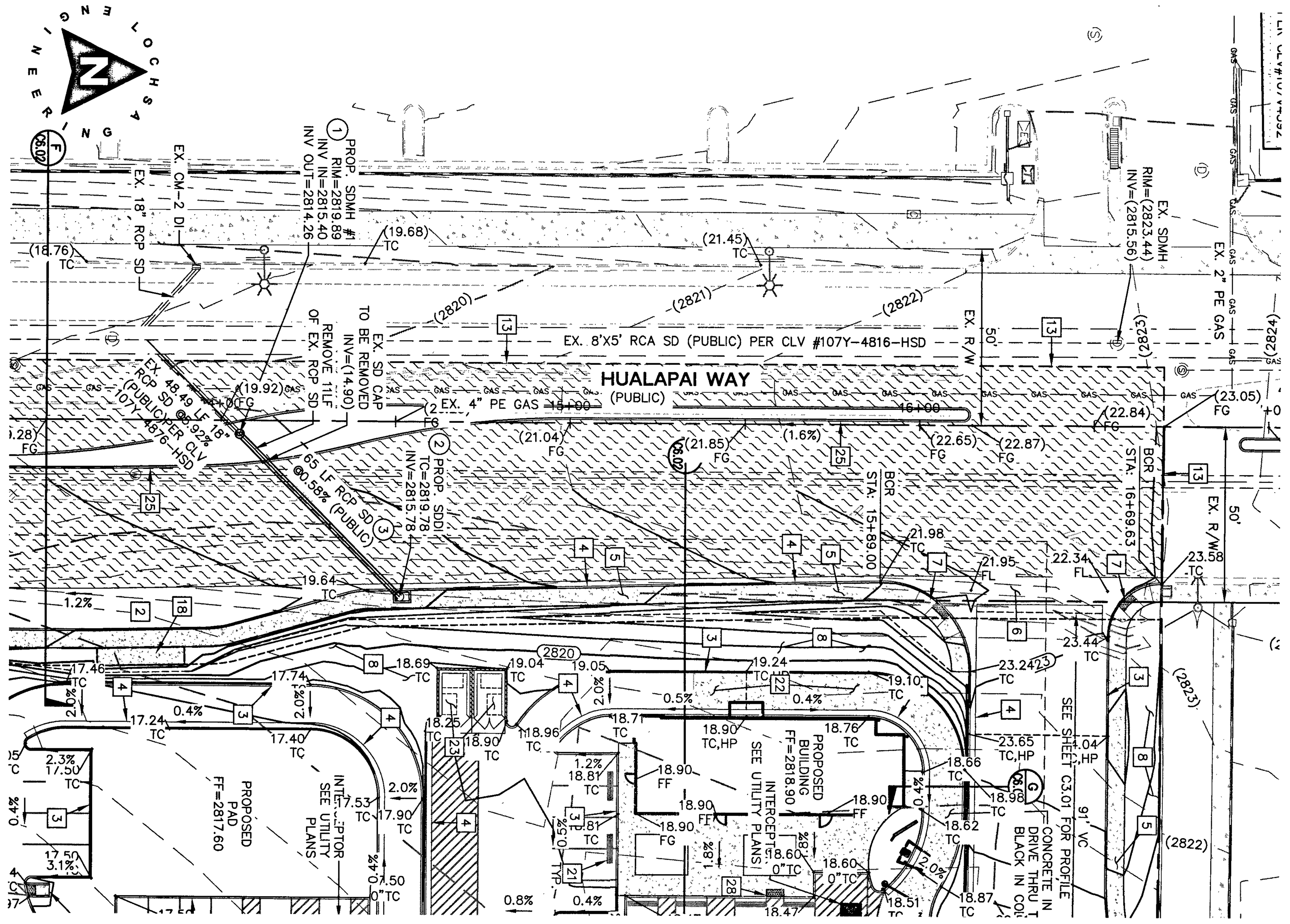

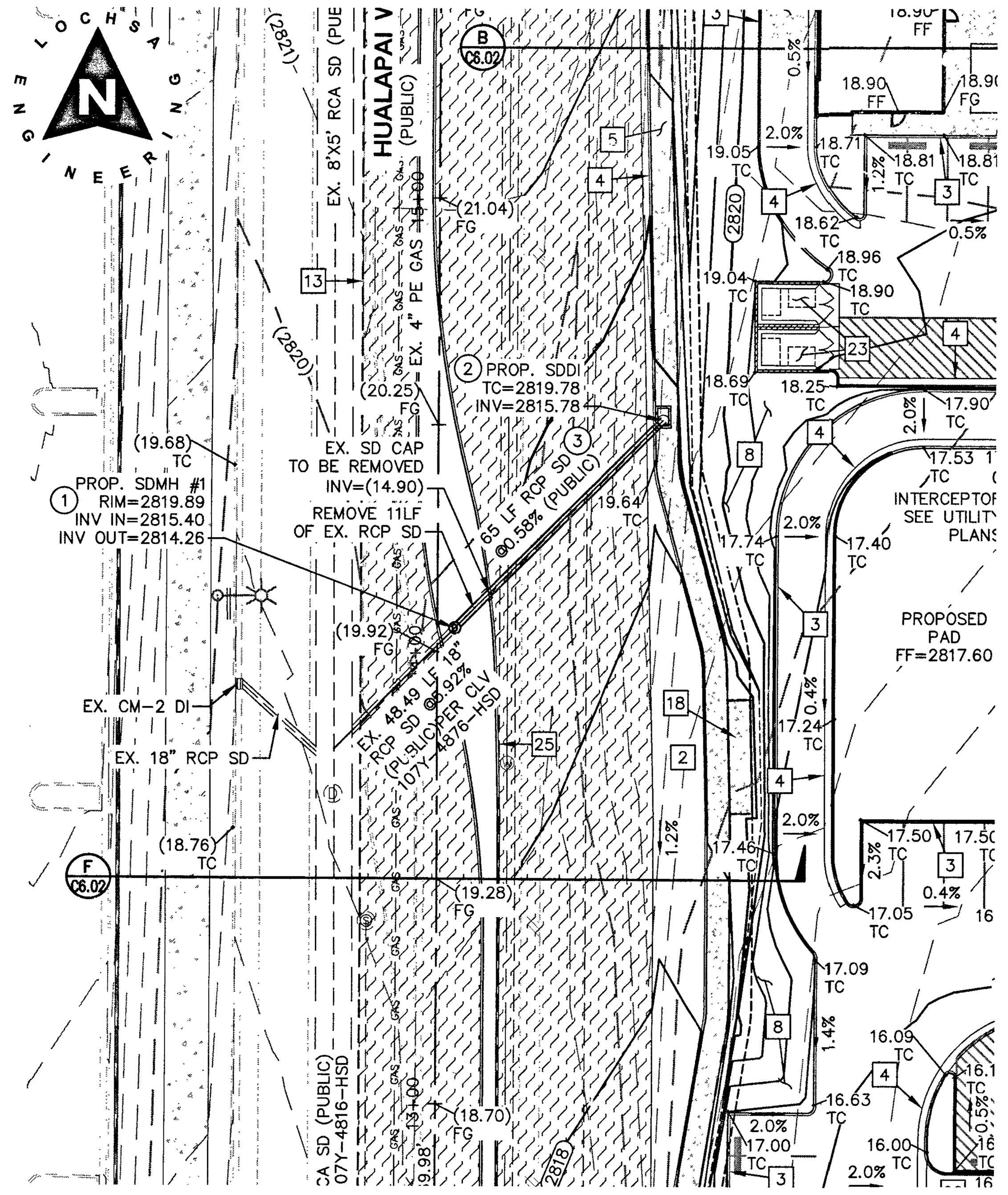

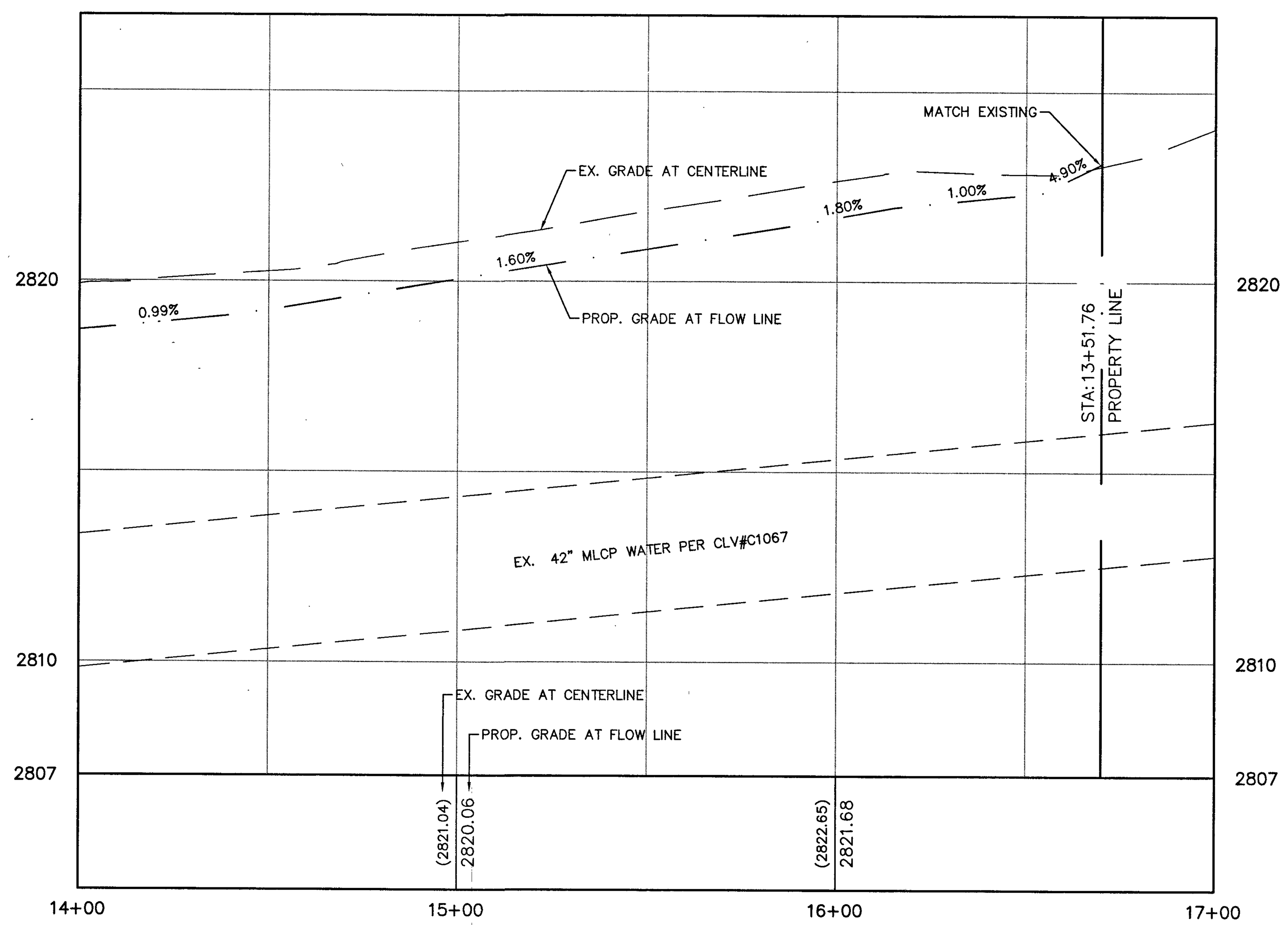

HUALAPAI PROFILE VIEW
HORIZONTAL SCALE: 1"=30'
VERTICAL SCALE: 1"=3'

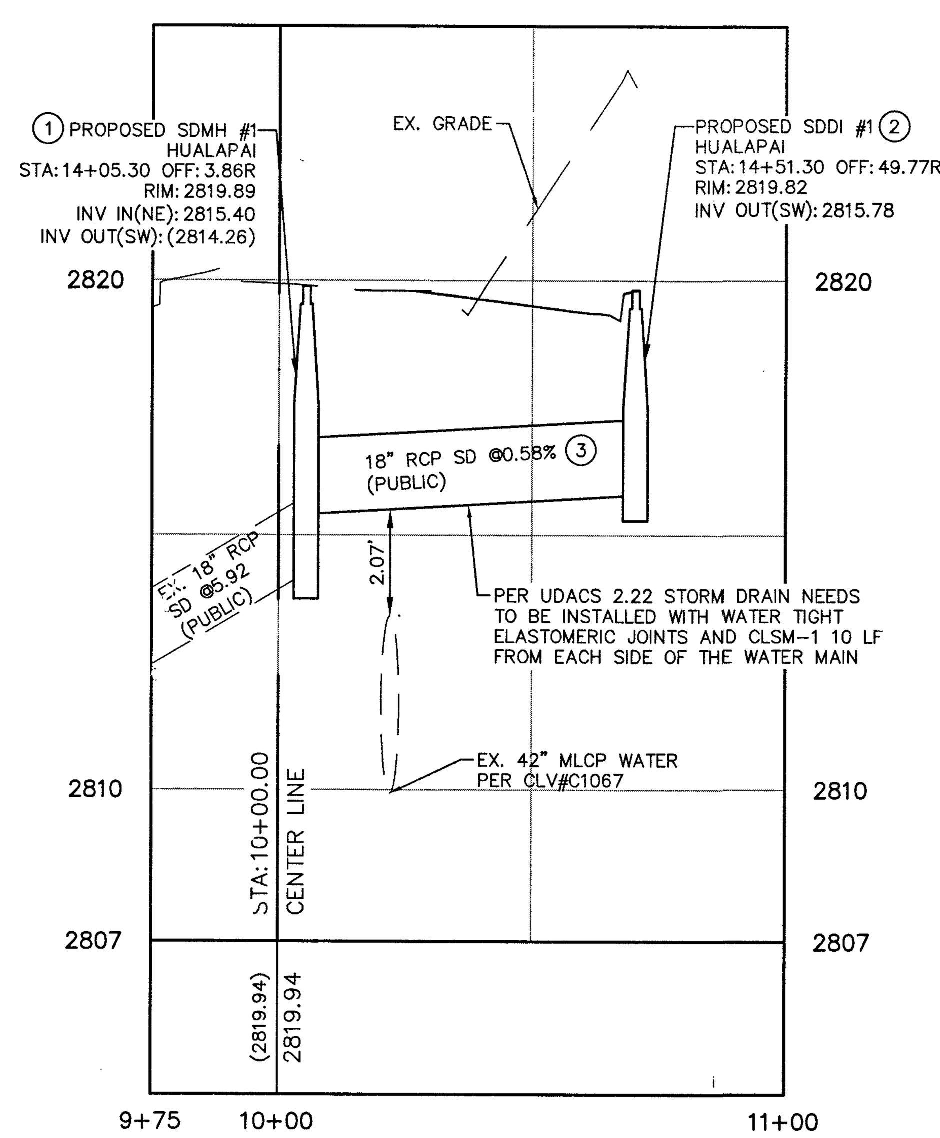

SD LATERAL PROFILE VIEW
HORIZONTAL SCALE: 1"=30'
VERTICAL SCALE: 1"=3'

APPROVED FOR CONSTRUCTION

LAS VEGAS VALLEY WATER DISTRICT ENGINEERING SERVICES MANAGER
PROJECT No. 125376 DATE: 6/14/17

NOTE: ALL LOCATIONS OF UTILITIES SHOWN ARE APPROXIMATE

GRAPHIC SCALE

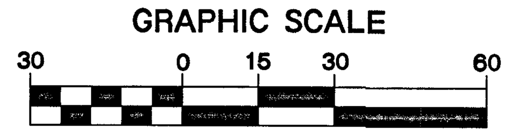

(IN FEET)
1 inch = 30 ft.

A.P.N.:
125-19-202-006

BASIS OF BEARINGS:
SOUTH 89°47'00" EAST, BEING THE BEARING OF THE SOUTH LINE OF THE SOUTHWEST QUARTER (SW 1/4) OF THE SOUTHWEST QUARTER (SW 1/4) OF SECTION 19, TOWNSHIP 19 SOUTH, RANGE 60 EAST, M.D.M., ALSO BEING THE CENTERLINE OF CENTENNIAL PARKWAY AS MEASURED BETWEEN HAULAPAI WAY AND CONQUISTADOR STREET AS SHOWN ON FILE 107, PAGE 31 OF SURVEYS IN THE RECORDER'S OFFICE, CLARK COUNTY, NEVADA.

BENCHMARK:
RIVET & PLATE IN TOP OF CURB AT THE SOUTHEAST CORNER OF THE BRIDGE OVER CLARK COUNTY HIGHWAY 215 ON HUALAPAI. ELEVATION – 853.317 (METERS) / 2799.59 (U.S. SURVEY FEET) NORTH AMERICAN VERTICAL DATUM OF 1988

FLOOD ZONE NOTE:
THE PROJECT SITE IS COVERED BY THE FLOOD INSURANCE RATE MAP (FIRM) FOR THE CLARK COUNTY, NEVADA, AND INCORPORATED AREAS, COMMUNITY PANEL NUMBER: 32003C1750E, EFFECTIVE DATE: SEPTEMBER 27, 2002. THE PROJECT SITE FALLS WITHIN ZONE "X"(UNSHADED), DESCRIBED BY FEMA AS: "AREAS DETERMINED TO BE OUTSIDE THE 0.2% ANNUAL CHANCE FLOODPLAIN.

CUT	FILL	NET
19,474.45 CY	3,290.52 CY	16,183.93 CY

NOTE: CUT/FILL QUANTITIES ARE TO FINISHED GRADE & DO NOT INCLUDE MATERIAL THICKNESS'S, FOOTINGS, ETC.

STORM DRAIN CONSTRUCTION NOTES:
– NOT ALL NOTES USED ON THIS SHEET –

(1) INSTALL 48" TYPE I STORM DRAIN MANHOLE PER C.C.A.U.S.D. No. 403

(2) CONSTRUCT 2.5' TYPE "CM2" DROP INLET PER C.C.A.U.S.D. Nos. 412.1 AND 421

(3) RCP STORM DRAIN TO BE INSTALLED WITH JOINT GASKETS PER UDACS SECTION 2, PARAGRAPH 2.22.02–D

CONSTRUCTION NOTES:
– ALL CONSTRUCTION TO BE DONE IN ACCORDANCE WITH "CLARK COUNTY AREA UNIFORM STANDARD DRAWINGS (C.C.A.U.S.D.)" LATEST EDITION AND/OR REGULATING ENTITY HAVING JURISDICTION.
– NOT ALL NOTES USED ON THIS SHEET –

1. CONSTRUCT AC PAVEMENT PER DETAIL 3 ON C6.01.
2. CONSTRUCT TYPICAL BUS STOP PER CCAUSD #234.1
3. CONSTRUCT "A" TYPE CURB PER DETAIL 4 SHEET C6.01
4. CONSTRUCT "L" TYPE CURB PER CCAUSD No. 216.
5. CONSTRUCT CONC. SIDEWALK PER CCAUSD No. 234.
6. CONSTRUCT VALLEY GUTTER PER CCAUSD No. 228
7. CONSTRUCT SIDEWALK RAMP CCAUSD No. 235 CASE I.
8. LANDSCAPING – REFER TO LANDSCAPE PLANS FOR SPECIFICATIONS.
9. CONSTRUCT 2' VALLEY GUTTER PER DETAIL 8 ON C6.01
10. CONSTRUCT SIDEWALK DRAIN PER C.C.A.U.S.D. No. 236
11. CONSTRUCT MODIFIED CURB RAMP PER DETAIL 1 ON SHEET C6.01
12. INSTALL RIP RAP SWALES PER DETAIL 5 ON C6.01 WITH CURB CUTS PER DETAIL 6 ON C6.01
13. SAWCUT AND MATCH EXISTING PAVEMENT
14. CONSTRUCT SIDEWALK RAMP PER DETAIL 13 ON C6.02
15. CONSTRUCT CONC. 'U' CHANNEL PER DETAIL 2 ON C6.01
16. PROPOSED WALL BY OTHERS
17. PROPOSED GATE BY OTHERS
18. CONSTRUCT BUS STOP PASSENGER SHELTER PAD PER CCAUSD #234.2
19. RETAINING WALL BY OTHERS
20. CONSTRUCT 2' WIDE CURB OPENING
21. CONSTRUCT PARKING BUMPER PER DETAIL 14 ON C6.02
22. CONSTRUCT CONC. PAVEMENT PER DETAIL 7 ON C6.01
23. PROPOSED TRASH ENCLOSURE PER ARCH. PLANS
24. CONSTRUCT SIDEWALK RAMP PER DETAIL 15 ON C6.02
25. CONSTRUCT "A" TYPE ISLAND CURB PER CCAUSD #219
26. RETAINING WALL WITH HANDRAIL BY OTHERS.
27. CONSTRUCT MODIFIED CURB RAMP PER DETAIL 16 ON SHEET C6.02
28. INSTALL DETECTABLE WARNING (TRUNCATED DOMES) PER CCAUSD No. 235, SHEET 4.
29. INSTALL ENHANCED PAVEMENT PER ARCHITECTURAL DRAWINGS.

GENERAL GRADING NOTES:
A. PRIOR TO INSTALLATION OF STORM OR SANITARY SEWER, WATER MAIN OR ANY OTHER UTILITIES, THE CONTRACTOR SHALL EXCAVATE, VERIFY, AND CALCULATE ALL POINTS OF CONNECTION AND ALL UTILITY CROSSINGS AND INFORM THE OWNER AND THE ENGINEER OF ANY CONFLICTS OR REQUIRED DEVIATIONS FROM THE PLAN PRIOR TO CONSTRUCTION. NOTIFICATION SHALL BE MADE A MINIMUM OF 72 HOURS PRIOR TO CONSTRUCTION, THE ENGINEER AND ITS CLIENTS SHALL BE HELD HARMLESS IN THE EVENT THAT THE CONTRACTOR FAILS TO MAKE SUCH NOTIFICATION.

B. ALL SLOPES AND AREAS DISTURBED BY CONSTRUCTION SHALL BE GRADED SMOOTH AND FOUR INCHES OF TOPSOIL APPLIED. IF ADEQUATE TOPSOIL IS NOT AVAILABLE ON SITE, THE CONTRACTOR SHALL PROVIDE TOPSOIL, APPROVED BY THE OWNER, AS NEEDED. THE AREA SHALL THEN BE SEEDED/SODDED, FERTILIZED, MULCHED, WATERED AND MAINTAINED UNTIL HARDY GRASS GROWTH IS ESTABLISHED IN ALL AREAS. ANY RELOCATED TREES SHALL BE MAINTAINED UNTIL SUCH POINT AS TREE IS RE-ESTABLISHED. ANY AREAS DISTURBED FOR ANY REASON PRIOR TO FINAL ACCEPTANCE OF THE PROJECT SHALL BE CORRECTED BY THE CONTRACTOR AT NO ADDITIONAL COST TO THE OWNER.

C. THE CONTRACTOR IS SPECIFICALLY CAUTIONED THAT THE LOCATION AND/OR ELEVATION OF EXISTING UTILITIES AS SHOWN ON THESE PLANS IS BASED ON RECORDS OF THE VARIOUS UTILITY COMPANIES, AND WHERE POSSIBLE, MEASUREMENTS TAKEN IN THE FIELD. THE INFORMATION IS NOT TO BE RELIED ON AS BEING EXACT OR COMPLETE. THE CONTRACTOR MUST CALL THE APPROPRIATE UTILITY COMPANY AT LEAST 72 HOURS BEFORE ANY EXCAVATION TO REQUEST EXACT FIELD LOCATION OF UTILITIES.

D. REFER TO GEOTECHNICAL REPORT FOR SPECIFIC SITE SOIL CONDITIONS AND CONSIDERATIONS.

E. CONTRACTOR SHALL COMPLY COMPLETELY WITH THE LATEST STANDARDS OF OSHA DIRECTIVES OR ANY OTHER AGENCY HAVING JURISDICTION FOR EXCAVATION AND TRENCHING PROCEDURES. THE CONTRACTOR SHALL USE SUPPORT SYSTEMS, SLOPING, BENCHING AND OTHER MEANS OF PROTECTION. THIS IS TO INCLUDE, BUT NOT LIMITED FOR ACCESS AND EGRESS FROM ALL EXCAVATION AND TRENCHING. CONTRACTOR IS RESPONSIBLE FOR COMPLYING WITH PERFORMANCE CRITERIA AS REQUIRED BY OSHA.

GRADING PLAN CERTIFICATION

NAME: [signature] PE # 11286 DATE 5/24/17

CERTIFY THAT THIS GRADING PLAN IS IN CONFORMANCE WITH APPROVED DRAINAGE STUDY FOR THIS SITE ON FILE AT THE CITY OF LAS VEGAS FOR THIS PROJECT.

DS#4857

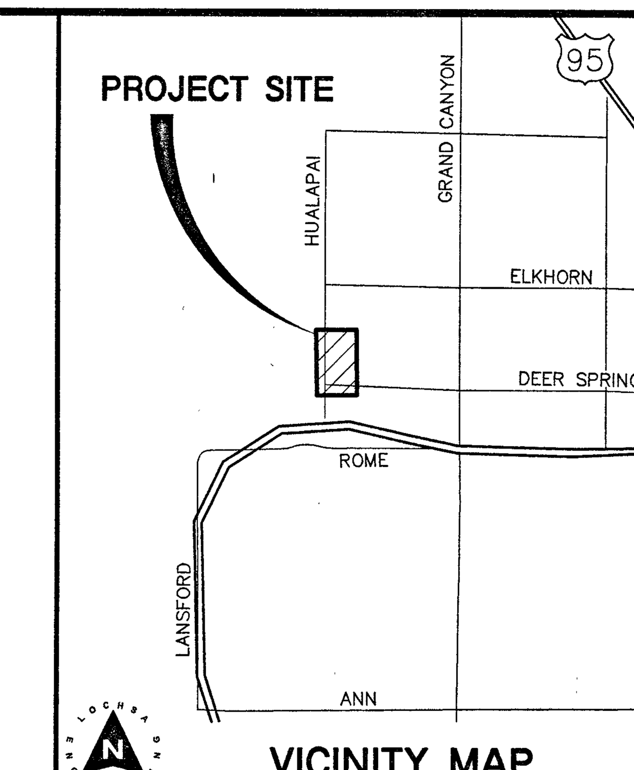

VICINITY MAP
NOT TO SCALE

GRADING NOTES:
1. SLOPES 4:1 OR STEEPER AND FINE-GRAINED MATERIALS THAT HAVE BEEN DISTURBED (SANDY AND SILTY MATERIALS) SHOULD BE PROTECTED WITH BURLAP OR OTHER EROSION CONTROL FABRIC/MATERIAL, UNLESS OTHERWISE SPECIFIED BY LANDSCAPE DRAWINGS AND SPECIFICATIONS OR THE SOILS REPORT.
2. CONTRACTOR SHALL DETERMINE HIS OWN FOOTING OR BASEMENT EXCAVATION QUANTITIES, EVEN THOUGH SHOWN ON ROUGH GRADING PLANS. ADDITIONALLY, STRUCTURE BACKFILL COSTS SHOULD BE INCLUDED IN THE COST OF THE STRUCTURE, UNLESS OTHERWISE SPECIFIED IN THE CONTRACT DOCUMENTS.
3. CONTRACTOR SHALL NOTIFY LOCHSA ENGINEERING WITHIN 24 HOURS OF OMISSIONS AND ERRORS DISCOVERED ON PLANS. LOCHSA ENGINEERING WILL NOT BE RESPONSIBLE FOR ANY "CORRECTIVE" WORK DONE BY OTHERS.
4. CONTRACTOR TO ENSURE POSITIVE DRAINAGE. NO PONDING ALLOWED. CONTRACTOR TO FOLLOW RECOMMENDATIONS AS OUTLINED IN THE PROJECT GEOTECHNICAL REPORT, INCLUDING BUT NOT LIMITED TO EXCAVATION, GRADING AND COMPACTION. REFER TO THE REPORT PREPARED BY: GEOTEK, INC., PROJECT No. 13092-LV, DATED: AUGUST 31, 2016.

LAS VEGAS VALLEY CONSTRUCTION SITE BEST MANAGEMENT PRACTICES GUIDANCE MANUAL SECTION 3.5.1 STANDARD NOTES 1–5
1. THE OWNER, SITE DEVELOPER, CONTRACTOR, AND/OR THEIR AUTHORIZED AGENTS SHALL EACH DAY REMOVE ALL SEDIMENT, MUD, CONSTRUCTION DEBRIS, OR OTHER POTENTIAL POLLUTANTS THAT MAY HAVE BEEN DISCHARGED TO, OR ACCUMULATED IN, THE PUBLIC RIGHT-OF-WAY OF THE _____(INSERT JURISDICTION)_____ AS A RESULT OF CONSTRUCTION ACTIVITIES ASSOCIATED WITH THIS SITE DEVELOPMENT OR CONSTRUCTION PROJECT. SUCH MATERIAL SHALL BE PREVENTED FROM ENTERING THE STORM SEWER SYSTEM.
2. ADDITIONAL CONSTRUCTION SITE DISCHARGE BEST MANAGEMENT PRACTICES MAY BE REQUIRED OF THE OWNER AND HIS OR HER AGENTS DUE TO UNFORESEEN EROSION PROBLEMS OR IF THE SUBMITTED PLAN DOES NOT MEET THE PERFORMANCE STANDARDS SPECIFIED IN THE _____(INSERT JURISDICTION)_____ AND THE LAS VEGAS VALLEY CONSTRUCTION SITE BMP GUIDANCE MANUAL.
3. TEMPORARY OR PERMANENT STABILIZATION PRACTICES WILL BE INSTALLED ON DISTURBED AREAS AS SOON AS PRACTICABLE AND NO LATER THAN 14 DAYS AFTER THE CONSTRUCTION ACTIVITY IN THAT PORTION OF THE SITE HAS TEMPORARILY OR PERMANENTLY CEASED. SOME EXCEPTIONS MAY APPLY; REFER TO THE NEVADA STORMWATER GENERAL PERMIT FOR CONSTRUCTION ACTIVITY NVR10000, SECTION III.A.5.
4. AT A MINIMUM, THE CONTRACTOR OR HIS AGENT SHALL INSPECT ALL DISTURBED AREAS, AREAS USED FOR STORAGE OF MATERIALS AND EQUIPMENT THAT ARE EXPOSED TO PRECIPITATION, VEHICLE ENTRANCE AND EXIT LOCATIONS, AND ALL BMPS WEEKLY, AND WITHIN 24 HOURS AFTER ANY RAIN EVENT OR 0.5 INCHES OR MORE. THE CONTRACTOR OR HIS AGENT SHALL UPDATE OR MODIFY THE STORMWATER POLLUTION PREVENTION PLAN AS NECESSARY. SOME EXCEPTIONS TO WEEKLY INSPECTIONS MAY APPLY, SUCH AS SUSPENSION OF LAND DISTURBANCE ACTIVITIES. REFER TO THE NEVADA STORMWATER GENERAL PERMIT FOR CONSTRUCTION ACTIVITY NVR100000, SECTION III.A.12.
5. ACCUMULATED SEDIMENT IN BMP'S SHALL BE REMOVED WITHIN SEVEN DAYS AFTER A STORMWATER RUNOFF EVENT OR PRIOR TO THE NEXT ANTICIPATED STORM EVENT, WHICHEVER IS EARLIER. SEDIMENT MUST BE REMOVED WHEN BMP DESIGN CAPACITY HAS BEEN REDUCED BY 50 PERCENT OR MORE.

EXISTING UTILITY NOTE:
CONTRACTOR TO ADJUST ALL EXISTING UTILITIES TO MATCH PROPOSED FINISH GRADE ELEVATIONS.

NOTE:
LOCHSA ENGINEERING ASSUMES NO RESPONSIBILITY FOR EXISTING UTILITY LOCATIONS AND ELEVATIONS. THE UTILITIES SHOWN ON THIS PLAN ARE FROM THE BEST AVAILABLE INFORMATION. IT IS THE CONTRACTOR'S RESPONSIBILITY TO FIELD VERIFY THE LOCATION AND ELEVATION OF ALL UTILITIES, INCLUDING BUT NOT LIMITED TO, THE WATER, FIRE, SANITARY SEWER, STORM SEWER, TELEPHONE, POWER, GAS, AND IRRIGATION LINES PRIOR TO THE COMMENCEMENT OF CONSTRUCTION. IF CONFLICT EXISTS IN THE FIELD, THE CONTRACTOR IS TO NOTIFY THE PROJECT ARCHITECT, OWNER'S REPRESENTATIVE AND THE PROJECT ENGINEER IMMEDIATELY.

Call before you Dig
Avoid cutting underground utility lines. It's costly.
CALL 811
OR
1-800-227-2600

FAST
Call before you Underground
1-702-432-5300
FREEWAY & ARTERIAL SYSTEM OF TRANSPORTATION

Avoid hitting overhead power lines. It's costly.
CALL BEFORE YOU DO OVERHEAD
1-702-227-2929

REV.:	DATE:	BY:	DESCRIPTION:

Lochsa engineering
6345 South Jones Blvd.
Suite 100
Las Vegas, NV 89118
Phone (702) 365-9312
Fax (702) 365-9317
www.lochsa.com

SHEET: PLAN AND PROFILES HUALAPAI WAY (SHEET 2 OF 2)

TITLE: DEER SPRINGS AND HUALAPAI CITY OF LAS VEGAS, NEVADA

PROJECT No.:	161109
DATE:	4/25/2017
SCALE:	1"=30'
DRAWN BY:	MGZ
DESIGNED BY:	MGZ
CHECKED BY:	JLI

SEAL

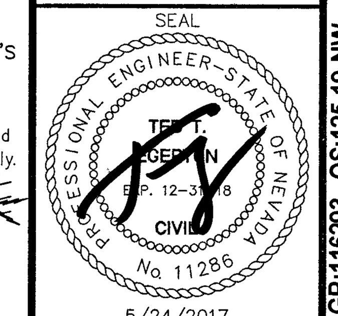

5/24/2017

SHEET No. C4.03
SHEET 10 OF 15
1074506B

CLV No. 69418

HTE No. 17-19756

PROJ#:125376 AGR:116293 QS:125-19-NW

LEGEND		
CL OR SURVEY LINE	EASEMENT LINE	
PROPERTY LINE	SAWCUT LINE	
ROW LINE	SCARP LINE	

DESCRIPTION:	CONTOUR LINES	EDGE OF PAVEMENT	"A" TYPE CURBS	"L" TYPE CURBS	WALLS	FENCES	AC PAVEMENT	CONCRETE	SPOT ELEVATIONS	SIGNS	MANHOLE W/ DESCRIPTION	MANHOLE DESCRIPTIONS	FIRE HYDRANTS	GATE VALVES	REDUCERS	CLEAN OUTS	UTILITY BOX OR VAULT	BACKWATER VALVES	100w HPS STREETLIGHTS	150w HPS STREETLIGHTS	200w HPS STREETLIGHTS	250w HPS STREETLIGHTS
EXISTING:	(2210)								(12.34) BC		Ⓢ	Ⓢ = SANITARY SEWER; Ⓓ = STORM DRAIN						BWV				
PROPOSED:	2122								12.34 BC		Ⓢ	Ⓔ = ELECTRICAL; Ⓣ = TELEPHONE						BWV				

5/28/2017 8:31 AM
T:\CAD\161109\Drawings\Plot Drawings\c-161109-PP.dwg

FOR CONTINUATION SEE SHEET C5.02

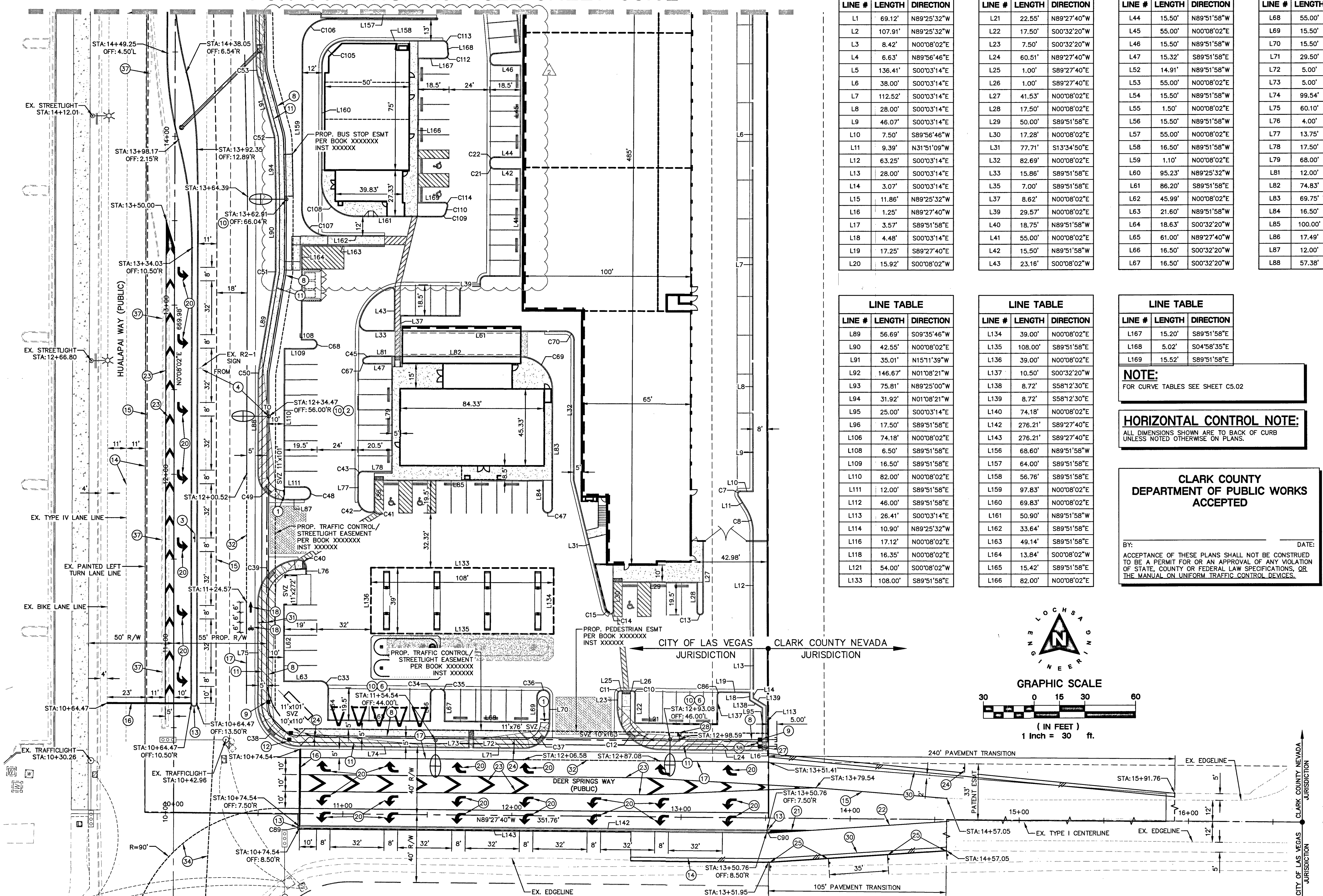

FOR CONTINUATION SEE SHEET C5.02

LINE #	LENGTH	DIRECTION
L1	69.12'	N89°25'32"W
L2	107.91'	N89°25'32"W
L3	8.42'	N00°08'02"E
L4	6.63'	N89°56'46"E
L5	136.41'	S00°03'14"E
L6	38.00'	S00°03'14"E
L7	112.52'	S00°03'14"E
L8	28.00'	S00°03'14"E
L9	46.07'	S00°03'14"E
L10	7.50'	S89°56'46"W
L11	9.39'	N31°51'09"W
L12	63.25'	S00°03'14"E
L13	28.00'	S00°03'14"E
L14	3.07'	S00°03'14"E
L15	11.86'	N89°25'32"W
L16	1.25'	N89°27'40"W
L17	3.57'	S89°51'58"E
L18	4.48'	S00°03'14"E
L19	17.25'	S89°27'40"E
L20	15.92'	S00°08'02"W

LINE #	LENGTH	DIRECTION
L21	22.55'	N89°27'40"W
L22	17.50'	S00°32'20"W
L23	7.50'	S00°32'20"W
L24	60.51'	N89°27'40"W
L25	1.00'	S89°27'40"E
L26	1.00'	S89°27'40"E
L27	41.53'	N00°08'02"E
L28	17.50'	N00°08'02"E
L29	50.00'	S89°51'58"E
L30	17.28'	N00°08'02"E
L31	77.71'	S13°34'50"E
L32	82.69'	N00°08'02"E
L33	15.86'	S89°51'58"E
L35	7.00'	S89°51'58"E
L37	8.62'	N00°08'02"E
L39	29.57'	N00°08'02"E
L40	18.75'	N89°51'58"W
L41	55.00'	N00°08'02"E
L42	15.50'	N89°51'58"W
L43	23.16'	S00°08'02"W

LINE #	LENGTH	DIRECTION
L44	15.50'	N89°51'58"W
L45	55.00'	N00°08'02"E
L46	15.50'	N89°51'58"W
L47	15.32'	S89°51'58"E
L52	14.91'	N89°51'58"W
L53	55.00'	N00°08'02"E
L54	15.50'	N89°51'58"W
L55	1.50'	N00°08'02"E
L56	15.50'	N89°51'58"W
L57	55.00'	N00°08'02"E
L58	16.50'	N89°51'58"W
L59	1.10'	N00°08'02"E
L60	95.23'	N89°25'32"W
L61	86.20'	S89°51'58"E
L62	45.99'	N00°08'02"E
L63	21.60'	N89°51'58"W
L64	18.63'	S00°32'20"W
L65	61.00'	N89°27'40"W
L66	16.50'	S00°32'20"W
L67	16.50'	S00°32'20"W

LINE #	LENGTH	DIRECTION
L68	55.00'	N89°27'40"W
L69	15.50'	S00°32'20"W
L70	15.50'	S00°32'20"W
L71	29.50'	N89°27'40"W
L72	5.00'	S00°32'20"W
L73	5.00'	S00°32'20"W
L74	99.54'	N89°27'40"W
L75	60.10'	N00°08'02"E
L76	4.00'	S00°08'02"W
L77	13.75'	N00°08'02"E
L78	17.50'	S89°51'58"E
L79	68.00'	N00°08'02"E
L81	12.00'	S89°51'58"E
L82	74.83'	S89°51'58"E
L83	69.75'	N00°08'02"E
L84	16.50'	N00°08'02"E
L85	100.00'	S89°51'58"E
L86	17.49'	N00°08'02"E
L87	12.00'	S89°51'58"E
L88	57.38'	N00°08'02"E

LINE #	LENGTH	DIRECTION
L89	56.69'	S09°35'46"W
L90	42.55'	N00°08'02"E
L91	35.01'	N15°11'39"W
L92	146.67'	N01°08'21"W
L93	75.81'	N89°25'00"W
L94	31.92'	N01°08'21"W
L95	25.00'	S00°03'14"E
L96	17.50'	S89°51'58"E
L106	74.18'	N00°08'02"E
L108	6.50'	S89°51'58"E
L109	16.50'	S89°51'58"E
L110	82.00'	N00°08'02"E
L111	12.00'	S89°51'58"E
L112	46.00'	S89°51'58"E
L113	26.41'	S00°03'14"E
L114	10.90'	N89°25'32"W
L116	17.12'	N00°08'02"E
L118	16.35'	N00°08'02"E
L121	54.00'	S00°08'02"W
L133	108.00'	S89°51'58"E

LINE #	LENGTH	DIRECTION
L134	39.00'	N00°08'02"E
L135	108.00'	S89°51'58"E
L136	39.00'	N00°08'02"E
L137	10.50'	S00°32'20"W
L138	8.72'	S58°12'30"E
L139	8.72'	S58°12'30"E
L140	74.18'	N00°08'02"E
L142	276.21'	S89°27'40"E
L143	276.21'	S89°27'40"E
L156	68.60'	N89°51'58"W
L157	64.00'	S89°51'58"E
L158	56.76'	S89°51'58"E
L159	97.83'	N00°08'02"E
L160	69.83'	N00°08'02"E
L161	50.90'	N89°51'58"W
L162	33.64'	S89°51'58"E
L163	49.14'	S89°51'58"E
L164	13.84'	S00°08'02"W
L165	15.42'	S89°51'58"E
L166	82.00'	N00°08'02"E

LINE #	LENGTH	DIRECTION
L167	15.20'	S89°51'58"E
L168	5.02'	S04°58'35"E
L169	15.52'	S89°51'58"E

NOTE:

FOR CURVE TABLES SEE SHEET C5.02

HORIZONTAL CONTROL NOTE:

ALL DIMENSIONS SHOWN ARE TO BACK OF CURB UNLESS NOTED OTHERWISE ON PLANS.

CLARK COUNTY DEPARTMENT OF PUBLIC WORKS ACCEPTED

BY: ______ DATE: ______

ACCEPTANCE OF THESE PLANS SHALL NOT BE CONSTRUED TO BE A PERMIT FOR OR AN APPROVAL OF ANY VIOLATION OF STATE, COUNTY OR FEDERAL LAW SPECIFICATIONS, OR THE MANUAL ON UNIFORM TRAFFIC CONTROL DEVICES.

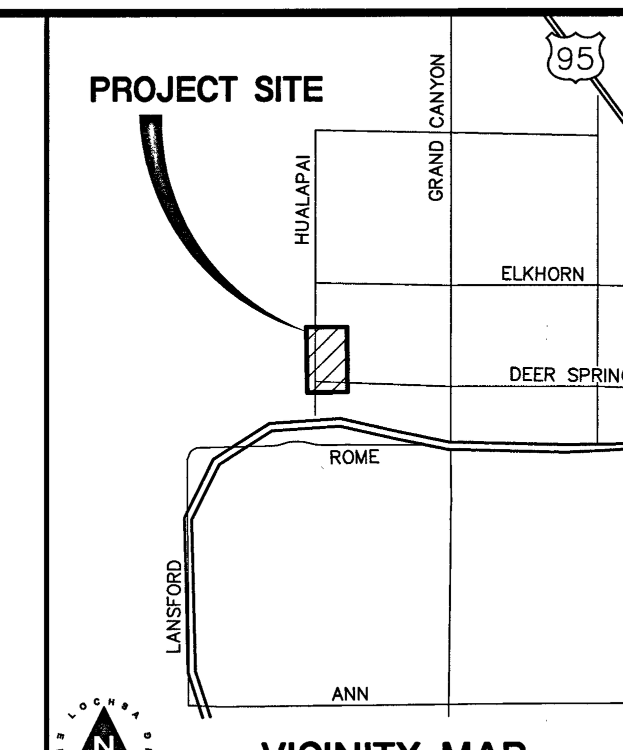

VICINITY MAP
NOT TO SCALE

TRAFFIC CONSTRUCTION NOTES:

– ALL CONSTRUCTION TO BE DONE IN ACCORDANCE WITH "CLARK COUNTY AREA UNIFORM STANDARD DRAWINGS (CCAUSD)" LATEST EDITION.

1. INSTALL 36" R1-1 SIGN
2. INSTALL R7-1A SIGN (18"X24")
3. INSTALL R6-1R SIGN (36"X12")
4. RELOCATE EX. R2-1 SIGN
5. REMOVE EXISTING SIGNS
6. INSTALL R3-17 SIGN (24"X18") W/ R3-17B SIGN (24"X18")
7. INTERCEPT EX. CONDUIT AND REPULL CONDUCTORS
8. INSTALL 1¼" PVC CONDUIT W/ (2)#4 CONDUCTORS AND (1)#8 CONDUCTORS
9. INSTALL No 3½ PULLBOX PER CCAUSD 326
10. INSTALL LED FIXTURE CA22-LE-160 LA-AW-UMIV-BLP PER TOWN CENTER STANDARDS
11. INSTALL 4" FAST INTERCONNECT CONDUIT W/ (1)#8 BARE WIRE
12. P30 PULLBOX (REFER TO TRAFFIC SIGNAL PLAN)
13. INSTALL YELLOW PAINTED MEDIAN NOSE MARKINGS PER CCAUSD 248
14. OBLITERATE EX. STRIPING
15. INSTALL TYPE IV LANE LINE (RPM) PER CCAUSD 244.1
16. INSTALL TYPE II FILM WHITE 24" WIDE STOP BAR
17. INSTALL WHITE TYPE II FILM 6" WIDE BIKE LANE LINE
18. INSTALL WHITE TYPE I FILM BIKE PAVEMENT MARKINGS
19. INSTALL LEFT TURN LANE LINE PER CCAUSD 246
20. INSTALL WHITE TYPE II FILM PAVEMENT MARKING
21. INSTALL YELLOW PAINTED GORE AREA PER CCAUSD 245
22. INSTALL TYPE I CENTERLINE (RPM) PER CCAUSD 244
23. INSTALL WHITE PAINTED GORE AREA PER CCAUSD 245
24. INSTALL R3-7R SIGN (36"X36")
25. INSTALL OM-3R SIGN (12"X48")
26. INSTALL R3-4 SIGN (24"X24")
27. INSTALL P30 PULLBOX PER CCAUSD 761
28. INSTALL 200 AMP SERVICE PEDESTAL PER CCAUSD 330,331 & 332
29. INSTALL 4" WHITE PAINTED EDGELINE
30. INSTALL 8" WHITE PAINTED EDGELINE
31. INSTALL R3-17 SIGN (24"X18")
32. INSTALL TYPE II FILM SINGLE SKIP LANE LINE PER DETAIL
33. INSTALL 6" WIDE PAINTED GORE LINE
34. INSTALL WHITE CAT TRACKS (RPM)
35. INSTALL YELLOW TYPE II FILM AREA
36. INSTALL WHITE TYPE II FILM AREA
37. EXISTING ISLAND MEDIAN TO BE REMOVED
38. INSTALL NDOT SIGN RNV3-18

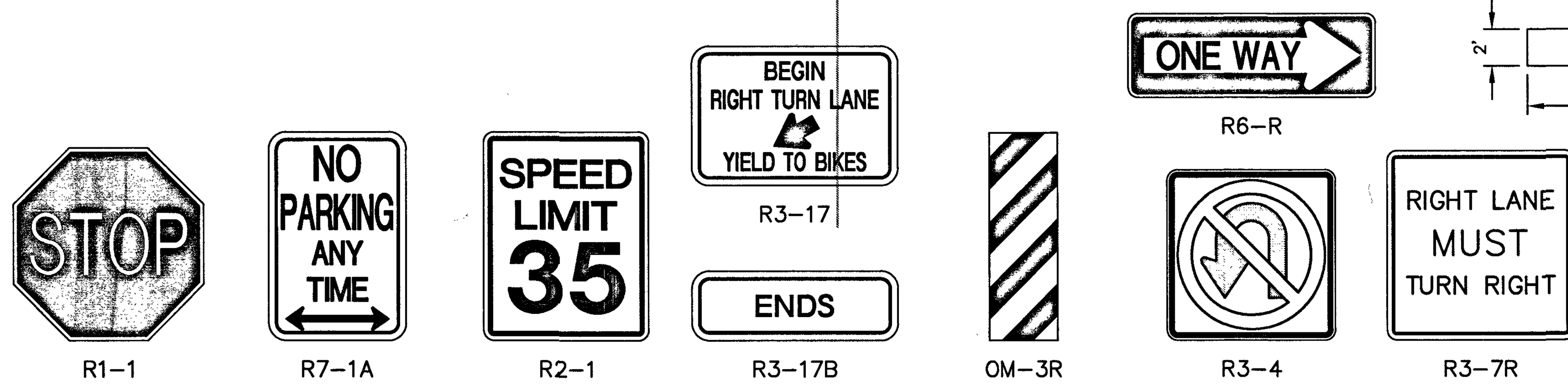

SKIP LANE DETAIL

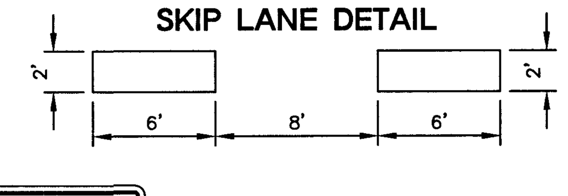

A.P.N.:
125-19-202-006

BASIS OF BEARINGS:
SOUTH 89°47'00" EAST, BEING THE BEARING OF THE SOUTH LINE OF THE SOUTHWEST QUARTER (SW 1/4) OF THE SOUTHWEST QUARTER (SW 1/4) OF SECTION 19, TOWNSHIP 19 SOUTH, RANGE 60 EAST, M.D.M., ALSO BEING THE CENTERLINE OF CENTENNIAL PARKWAY AS MEASURED BETWEEN HAULAPAI WAY AND CONQUISTADOR STREET AS SHOWN ON FILE 107, PAGE 31 OF SURVEYS IN THE RECORDER'S OFFICE, CLARK COUNTY, NEVADA.

BENCHMARK:
RIVET & PLATE IN TOP OF CURB AT THE SOUTHEAST CORNER OF THE BRIDGE OVER CLARK COUNTY HIGHWAY 215 ON HUALAPAI. ELEVATION – 853.317 (METERS) / 2799.59 (U.S. SURVEY FEET) NORTH AMERICAN VERTICAL DATUM OF 1988

NOTE:
LOCHSA ENGINEERING ASSUMES NO RESPONSIBILITY FOR EXISTING UTILITY LOCATIONS AND ELEVATIONS. THE UTILITIES SHOWN ON THIS PLAN ARE FROM THE BEST AVAILABLE INFORMATION. IT IS THE CONTRACTOR'S RESPONSIBILITY TO FIELD VERIFY THE LOCATION AND ELEVATION OF ALL UTILITIES, INCLUDING BUT NOT LIMITED TO, THE WATER, FIRE, SANITARY SEWER, STORM SEWER, TELEPHONE, POWER, GAS, AND IRRIGATION LINES PRIOR TO THE COMMENCEMENT OF CONSTRUCTION. IF CONFLICT EXISTS IN THE FIELD, THE CONTRACTOR IS TO NOTIFY THE PROJECT ARCHITECT, OWNER'S REPRESENTATIVE AND THE PROJECT ENGINEER IMMEDIATELY.

Call before you Dig
Avoid cutting underground utility lines. It's costly.
CALL 811
OR
1-800-227-2600

FAST
Call before you Underground
1-702-432-5300
FREEWAY & ARTERIAL SYSTEM OF TRANSPORTATION

Avoid hitting overhead power lines. It's costly.
CALL BEFORE YOU DO OVERHEAD
1-702-227-2929

REV.:	DATE:	BY:	DESCRIPTION:
2	3/14/18	JLI	ADDED BUILDING

CLV 58 5/16/18

Lochsa engineering
6345 South Jones Blvd.
Suite 100
Las Vegas, NV 89118
Phone (702) 365-9312
Fax (702) 365-9317
www.lochsa.com

SHEET: **TRAFFIC AND HORIZONTAL CONTROL PLANS SHEET 1 OF 2**

TITLE: **DEER SPRINGS AND HUALAPAI CITY OF LAS VEGAS, NEVADA**

PROJECT No.: 161109
DATE: APRIL 3, 2018
SCALE: ----
DRAWN BY: MGZ
DESIGNED BY: MGZ
CHECKED BY: JLI

SEAL: PROFESSIONAL ENGINEER – STATE OF NEVADA – TED T. EGERTON – EXP. 12-31-18 – CIVIL – No 11286 – 04/03/2018

10785060 L-69418
SHEET No. C5.01
SHEET 11 OF 15
CLV No. 69418 HTE No. 17-19756

LEGEND

CL OR SURVEY LINE
PROPERTY LINE
ROW LINE
EASEMENT LINE
SAWCUT LINE
SCARP LINE

DESCRIPTION:	CONTOUR LINES	EDGE OF PAVEMENT	"A" TYPE CURBS	"L" TYPE CURBS	WALLS	FENCES	AC PAVEMENT	CONCRETE	SPOT ELEVATIONS	SIGNS	MANHOLE W/ DESCRIPTION	FIRE HYDRANTS	GATE VALVES	REDUCERS	CLEAN OUTS	UTILITY BOX OR VAULT	BACKWATER VALVES	100w HPS STREETLIGHTS	150w HPS STREETLIGHTS	200w HPS STREETLIGHTS	250w HPS STREETLIGHTS
EXISTING:	(2210)								(12.34) BC		Ⓢ						BWV				
PROPOSED:	2122								12.34 BC		Ⓢ						BWV				

MANHOLE DESCRIPTIONS
Ⓢ = SANITARY SEWER
Ⓓ = STORM DRAIN
Ⓔ = ELECTRICAL
Ⓣ = TELEPHONE

4/3/2018 1:36 PM
T:\CAD\161109\Drawings\Plot Drawings\c-161109-hc.dwg

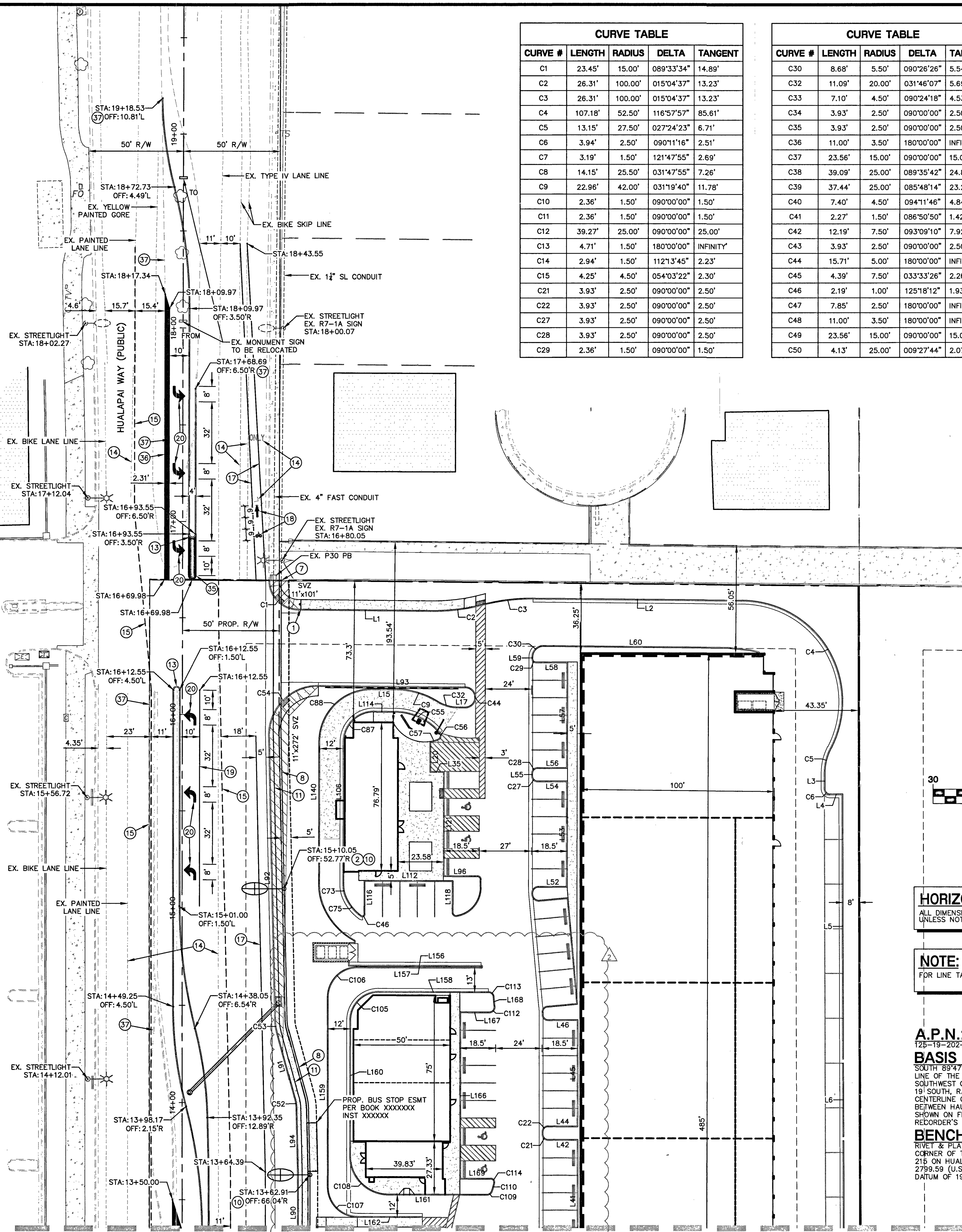

CURVE TABLE				
CURVE #	LENGTH	RADIUS	DELTA	TANGENT
C1	23.45'	15.00'	089°33'34"	14.89'
C2	26.31'	100.00'	015°04'37"	13.23'
C3	26.31'	100.00'	015°04'37"	13.23'
C4	107.18'	52.50'	116°57'57"	85.61'
C5	13.15'	27.50'	027°24'23"	6.71'
C6	3.94'	2.50'	090°11'16"	2.51'
C7	3.19'	1.50'	121°47'55"	2.69'
C8	14.15'	25.50'	031°47'55"	7.26'
C9	22.96'	42.00'	031°19'40"	11.78'
C10	2.36'	1.50'	090°00'00"	1.50'
C11	2.36'	1.50'	090°00'00"	1.50'
C12	39.27'	25.00'	090°00'00"	25.00'
C13	4.71'	1.50'	180°00'00"	INFINITY'
C14	2.94'	1.50'	112°13'45"	2.23'
C15	4.25'	4.50'	054°03'22"	2.30'
C21	3.93'	2.50'	090°00'00"	2.50'
C22	3.93'	2.50'	090°00'00"	2.50'
C27	3.93'	2.50'	090°00'00"	2.50'
C28	3.93'	2.50'	090°00'00"	2.50'
C29	2.36'	1.50'	090°00'00"	1.50'

CURVE TABLE				
CURVE #	LENGTH	RADIUS	DELTA	TANGENT
C30	8.68'	5.50'	090°26'26"	5.54'
C32	11.09'	20.00'	031°46'07"	5.69'
C33	7.10'	4.50'	090°24'18"	4.53'
C34	3.93'	2.50'	090°00'00"	2.50'
C35	3.93'	2.50'	090°00'00"	2.50'
C36	11.00'	3.50'	180°00'00"	INFINITY'
C37	23.56'	15.00'	090°00'00"	15.00'
C38	39.09'	25.00'	089°35'42"	24.82'
C39	37.44'	25.00'	085°48'14"	23.23'
C40	7.40'	4.50'	094°11'46"	4.84'
C41	2.27'	1.50'	086°50'50"	1.42'
C42	12.19'	7.50'	093°09'10"	7.92'
C43	3.93'	2.50'	090°00'00"	2.50'
C44	15.71'	5.00'	180°00'00"	INFINITY'
C45	4.39'	7.50'	033°33'26"	2.26'
C46	2.19'	1.00'	125°18'12"	1.93'
C47	7.85'	2.50'	180°00'00"	INFINITY'
C48	11.00'	3.50'	180°00'00"	INFINITY'
C49	23.56'	15.00'	090°00'00"	15.00'
C50	4.13'	25.00'	009°27'44"	2.07'

CURVE TABLE				
CURVE #	LENGTH	RADIUS	DELTA	TANGENT
C51	4.13'	25.00'	009°27'44"	2.07'
C52	6.13'	25.00'	014°03'18"	3.08'
C53	6.13'	25.00'	014°03'18"	3.08'
C54	40.02'	25.00'	091°42'49"	25.76'
C55	25.97'	30.00'	049°36'20"	13.86'
C56	3.75'	2.00'	107°23'08"	2.72'
C57	4.19'	18.00'	013°19'57"	2.10'
C67	3.83'	1.50'	146°26'34"	4.97'
C68	7.85'	2.50'	180°00'00"	INFINITY'
C69	30.63'	19.50'	090°00'00"	19.50'
C70	8.64'	5.50'	090°00'00"	5.50'
C73	5.53'	14.50'	021°51'25"	2.80'
C75	12.90'	22.50'	032°50'23"	6.63'
C86	2.36'	1.50'	090°00'00"	1.50'
C87	24.47'	15.50'	090°26'26"	15.62'
C88	43.45'	27.50'	090°31'29"	27.75'
C89	1.57'	0.50'	180°00'00"	INFINITY'
C90	1.57'	0.50'	180°00'00"	INFINITY'
C105	22.78'	14.50'	090°00'00"	14.50'
C106	24.35'	15.50'	090°00'01"	15.50'

CURVE TABLE				
CURVE #	LENGTH	RADIUS	DELTA	TANGENT
C107	24.35'	15.50'	090°00'00"	15.50'
C108	30.63'	19.50'	090°00'00"	19.50'
C109	3.03'	2.50'	069°24'47"	1.73'
C110	4.60'	27.50'	009°35'16"	2.31'
C112	4.15'	2.50'	095°06'38"	2.73'
C113	3.70'	2.50'	084°53'22"	2.29'
C114	3.53'	2.00'	100°59'57"	2.43'

FOR CONTINUATION SEE SHEET C5.01

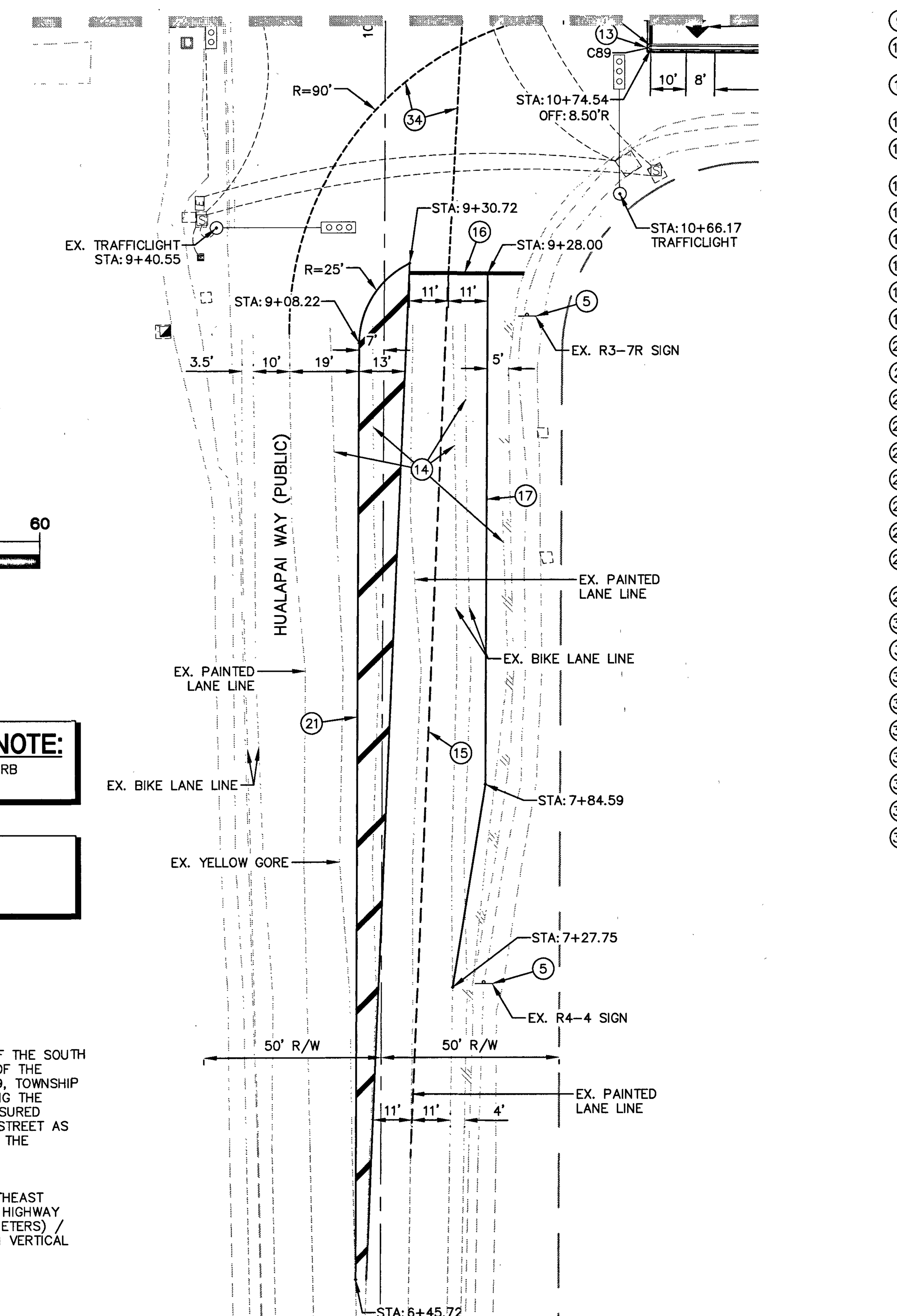

GRAPHIC SCALE

30 0 15 30 60

(IN FEET)
1 Inch = 30 ft.

HORIZONTAL CONTROL NOTE:

ALL DIMENSIONS SHOWN ARE TO BACK OF CURB UNLESS NOTED OTHERWISE ON PLANS.

NOTE:

FOR LINE TABLES SEE SHEET C5.01

A.P.N.:

125-19-202-006

BASIS OF BEARINGS:

SOUTH 89°47'00" EAST, BEING THE BEARING OF THE SOUTH LINE OF THE SOUTHWEST QUARTER (SW 1/4) OF THE SOUTHWEST QUARTER (SW 1/4) OF SECTION 19, TOWNSHIP 19 SOUTH, RANGE 60 EAST, M.D.M., ALSO BEING THE CENTERLINE OF CENTENNIAL PARKWAY AS MEASURED BETWEEN HAULAPAI WAY AND CONQUISTADOR STREET AS SHOWN ON FILE 107, PAGE 31 OF SURVEYS IN THE RECORDER'S OFFICE, CLARK COUNTY, NEVADA.

BENCHMARK:

RIVET & PLATE IN TOP OF CURB AT THE SOUTHEAST CORNER OF THE BRIDGE OVER CLARK COUNTY HIGHWAY 215 ON HUALAPAI. ELEVATION – 853.317 (METERS) / 2799.59 (U.S. SURVEY FEET) NORTH AMERICAN VERTICAL DATUM OF 1988

FOR CONTINUATION SEE SHEET C5.01

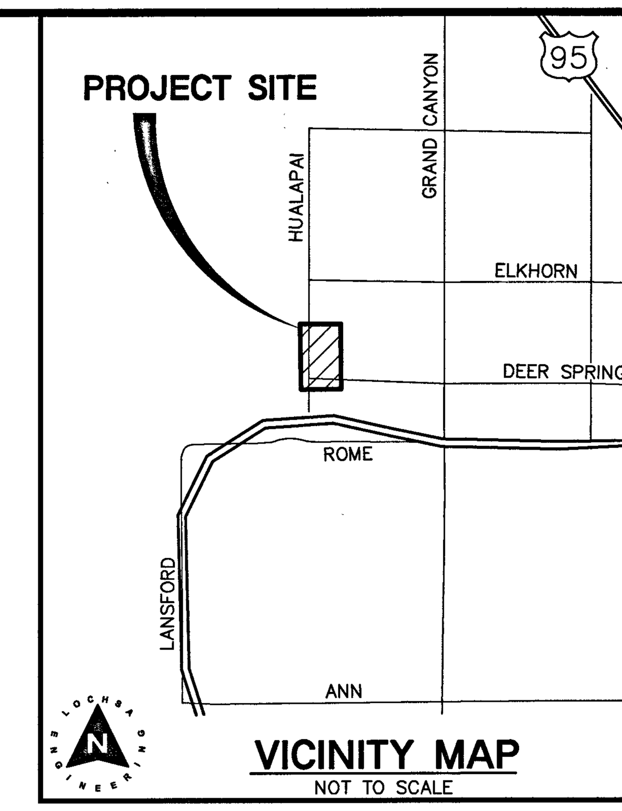

TRAFFIC CONSTRUCTION NOTES:

– ALL CONSTRUCTION TO BE DONE IN ACCORDANCE WITH "CLARK COUNTY AREA UNIFORM STANDARD DRAWINGS (CCAUSD)" LATEST EDITION.

1. INSTALL 36" R1–1 SIGN
2. INSTALL R7–1A SIGN (18"X24")
3. INSTALL R6–1R SIGN (36"X12")
4. RELOCATE EX. R2–1 SIGN
5. REMOVE EXISTING SIGNS
6. INSTALL R3–17 SIGN (24"X18") W/ R3–17B SIGN (24"X18")
7. INTERCEPT EX. CONDUIT AND REPULL CONDUCTORS
8. INSTALL 1¼" PVC CONDUIT W/ (2)#4 CONDUCTORS AND (1)#8 CONDUCTORS
9. INSTALL No 3½ PULLBOX PER CCAUSD 326
10. INSTALL LED FIXTURE CA22–LE–160 LA–AW–UMIV–BLP PER TOWN CENTER STANDARDS
11. INSTALL 4" FAST INTERCONNECT CONDUIT W/ (1)#8 BARE WIRE
12. P30 PULLBOX (REFER TO TRAFFIC SIGNAL PLAN)
13. INSTALL YELLOW PAINTED MEDIAN NOSE MARKINGS PER CCAUSD 248
14. OBLITERATE EX. STRIPING
15. INSTALL TYPE IV LANE LINE (RPM) PER CCAUSD 244.1
16. INSTALL TYPE II FILM WHITE 24" WIDE STOP BAR
17. INSTALL WHITE TYPE II FILM 6" WIDE BIKE LANE LINE
18. INSTALL WHITE TYPE I FILM BIKE PAVEMENT MARKINGS
19. INSTALL LEFT TURN LANE LINE PER CCAUSD 246
20. INSTALL WHITE TYPE II FILM PAVEMENT MARKING
21. INSTALL YELLOW PAINTED GORE AREA PER CCAUSD 245
22. INSTALL TYPE I CENTERLINE (RPM) PER CCAUSD 244
23. INSTALL WHITE PAINTED GORE AREA PER CCAUSD 245
24. INSTALL R3–7R SIGN (36"X36")
25. INSTALL OM–3R SIGN (12"X48")
26. INSTALL R3–4 SIGN (24"X24")
27. INSTALL P30 PULLBOX PER CCAUSD 761
28. INSTALL 200 AMP SERVICE PEDESTAL PER CCAUSD 330,331 & 332
29. INSTALL 4" WHITE PAINTED EDGELINE
30. INSTALL 8" WHITE PAINTED EDGELINE
31. INSTALL R3–17 SIGN (24"X18")
32. INSTALL TYPE II FILM SINGLE SKIP LANE LINE PER DETAIL
33. INSTALL 6" WIDE PAINTED GORE LINE
34. INSTALL WHITE CAT TRACKS (RPM)
35. INSTALL YELLOW TYPE II FILM AREA
36. INSTALL WHITE TYPE II FILM AREA
37. EXISTING ISLAND MEDIAN TO BE REMOVED
38. INSTALL NDOT SIGN RNV3–18

NOTE:

LOCHSA ENGINEERING ASSUMES NO RESPONSIBILITY FOR EXISTING UTILITY LOCATIONS AND ELEVATIONS. THE UTILITIES SHOWN ON THIS PLAN ARE FROM THE BEST AVAILABLE INFORMATION. IT IS THE CONTRACTOR'S RESPONSIBILITY TO FIELD VERIFY THE LOCATION AND ELEVATION OF ALL UTILITIES, INCLUDING BUT NOT LIMITED TO, THE WATER, FIRE, SANITARY SEWER, STORM SEWER, TELEPHONE, POWER, GAS, AND IRRIGATION LINES PRIOR TO THE COMMENCEMENT OF CONSTRUCTION. IF CONFLICT EXISTS IN THE FIELD, THE CONTRACTOR IS TO NOTIFY THE PROJECT ARCHITECT, OWNER'S REPRESENTATIVE AND THE PROJECT ENGINEER IMMEDIATELY.

Call before you Dig
Avoid cutting underground utility lines. It's costly.
CALL 811
OR 1-800-227-2600

FAST Call before you Underground
1-702-432-5300
FREEWAY & ARTERIAL SYSTEM OF TRANSPORTATION

Avoid hitting overhead power lines. It's costly.
CALL BEFORE YOU DO OVERHEAD
1-702-227-2929

REV.:	DATE:	BY:	DESCRIPTION:
2	3/14/18	JLI	ADDED BUILDING CLV SB 5/16/18

Lochsa engineering
6345 South Jones Blvd.
Suite 100
Las Vegas, NV 89118
Phone (702) 365-9312
Fax (702) 365-9317
www.lochsa.com

SHEET: TRAFFIC AND HORIZONTAL CONTROL PLANS SHEET 2 OF 2

TITLE: DEER SPRINGS AND HUALAPAI CITY OF LAS VEGAS, NEVADA

PROJECT No.: 161109

DATE: APRIL 3, 2018

SCALE: ----

DRAWN BY: MGZ

DESIGNED BY: MGZ

CHECKED BY: JLI

SEAL: PROFESSIONAL ENGINEER – STATE OF NEVADA, T. ...RTON, EXP 12-31-18, CIVIL, No. 11286, 04/03/2018

10 TY 6060
L-69418
SHEET No. C5.02
SHEET 12 OF 15

CLV No. 69418 HTE No. 17-19756

LEGEND		
CL OR SURVEY LINE	EASEMENT LINE	
PROPERTY LINE	SAWCUT LINE	
ROW LINE	SCARP LINE	

DESCRIPTION:	CONTOUR LINES	EDGE OF PAVEMENT	"A" TYPE CURBS	"L" TYPE CURBS	WALLS	FENCES	AC PAVEMENT	CONCRETE	SPOT ELEVATIONS	SIGNS	MANHOLE W/ DESCRIPTION	MANHOLE DESCRIPTIONS	FIRE HYDRANTS	GATE VALVES	REDUCERS	CLEAN OUTS	UTILITY BOX OR VAULT	BACKWATER VALVES	100w HPS STREETLIGHTS	150w HPS STREETLIGHTS	200w HPS STREETLIGHTS	250w HPS STREETLIGHTS
EXISTING:	(2210)								(12.34) BC		S	S = SANITARY SEWER; D = STORM DRAIN; E = ELECTRICAL; T = TELEPHONE						BWV				
PROPOSED:	2122								12.34 BC		S							BWV				

4/3/2018 1:36 PM
T:\CAD\161109\Drawings\Plot Drawings\c-161109-hc.dwg

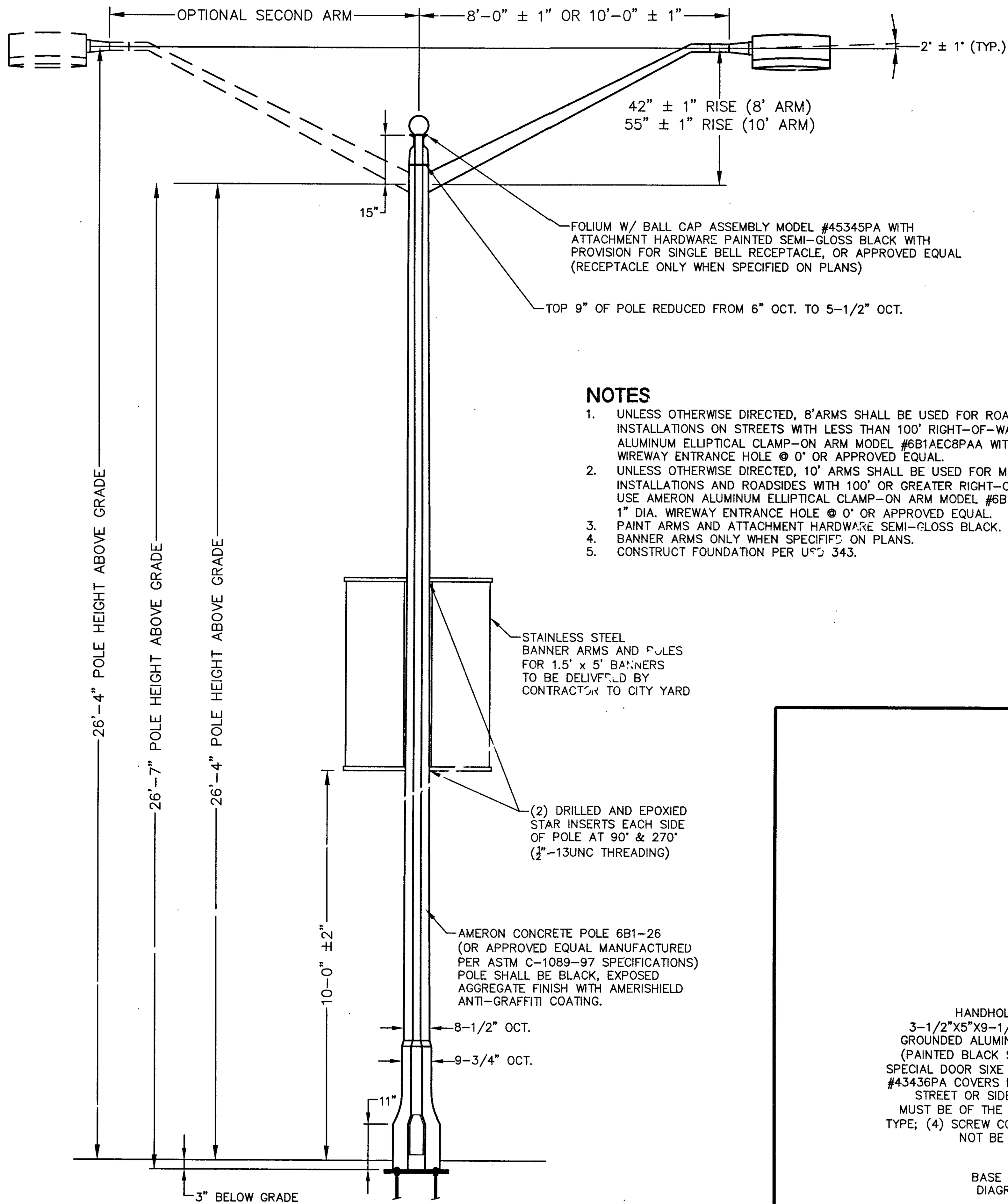

NOTES

1. UNLESS OTHERWISE DIRECTED, 8'ARMS SHALL BE USED FOR ROADSIDE INSTALLATIONS ON STREETS WITH LESS THAN 100' RIGHT-OF-WAY. USE AMERON ALUMINUM ELLIPTICAL CLAMP-ON ARM MODEL #6B1AEC8PAA WITH 1" DIA. WIREWAY ENTRANCE HOLE @ 0° OR APPROVED EQUAL.
2. UNLESS OTHERWISE DIRECTED, 10' ARMS SHALL BE USED FOR MEDIAN INSTALLATIONS AND ROADSIDES WITH 100' OR GREATER RIGHT-OF-WAY. USE AMERON ALUMINUM ELLIPTICAL CLAMP-ON ARM MODEL #6B1AEC10PAA WITH 1" DIA. WIREWAY ENTRANCE HOLE @ 0° OR APPROVED EQUAL.
3. PAINT ARMS AND ATTACHMENT HARDWARE SEMI-GLOSS BLACK.
4. BANNER ARMS ONLY WHEN SPECIFIED ON PLANS.
5. CONSTRUCT FOUNDATION PER USD 343.

LED FIXTURE SPECIFICATIONS

1. WITHIN 80' RIGHT-OF-WAY, USE PHILLIPS GARDCO CA22L-3-160LA-NW.
2. WITHIN 100' RIGHT-OF-WAY, USE PHILLIPS GARDCO CA22L-3-160LA-CW.
3. CITY ENGINEER MAY APPROVE EQUAL FIXTURES THAT MEET AESTHETIC AND LIGHT LEVEL REQUIREMENT PER USD 300.S3. LIGHTING STUDY REQUIRED.
4. CONTRACTOR SHALL VERIFY CITY'S LATEST LED FIXTURE SPECIFICATIONS PRIOR TO ORDERING MATERIALS.

12 26' STREET LIGHT POLE

NOT TO SCALE

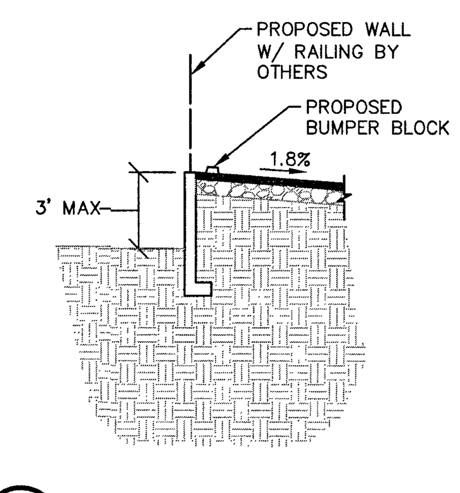

13 CROSS SECTION

N.T.S.

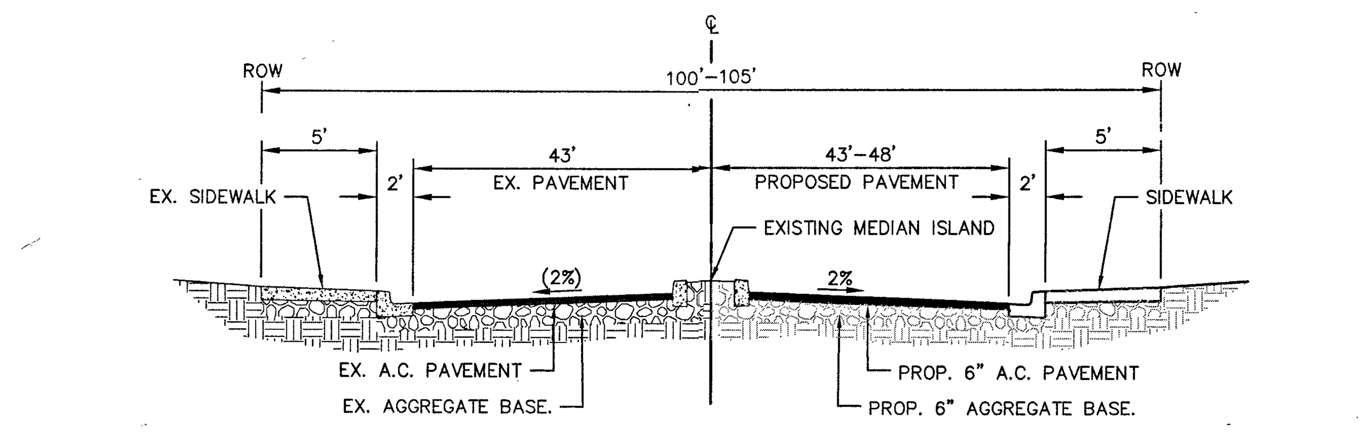

NOTE: SEE HORIZONTAL CONTROL PLANS FOR NEW MEDIAN LOCATIONS.

10 EXISTING HUALAPAI WAY ROAD SECTION

NOT TO SCALE

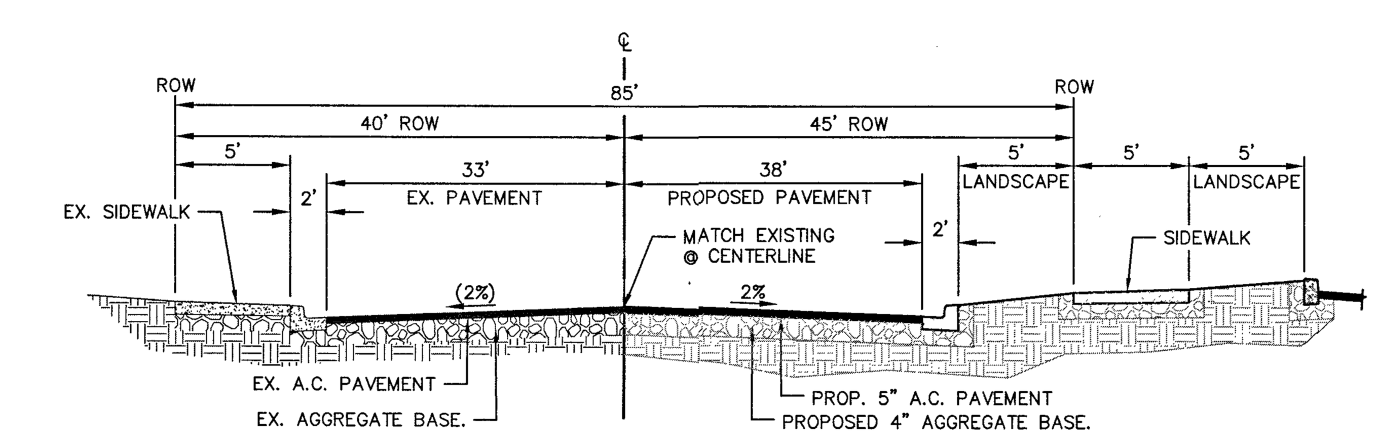

NOTE: SEE HORIZONTAL CONTROL PLANS FOR NEW MEDIAN LOCATIONS.

9 EXISTING DEER SPRINGS WAY ROAD SECTION

NOT TO SCALE

APPROVED FOR CONSTRUCTION

LAS VEGAS VALLEY WATER DISTRICT ENGINEERING SERVICES MANAGER

PROJECT No. 125376 DATE: 6/14/17

NOTE: ALL LOCATIONS OF UTILITIES SHOWN ARE APPROXIMATE

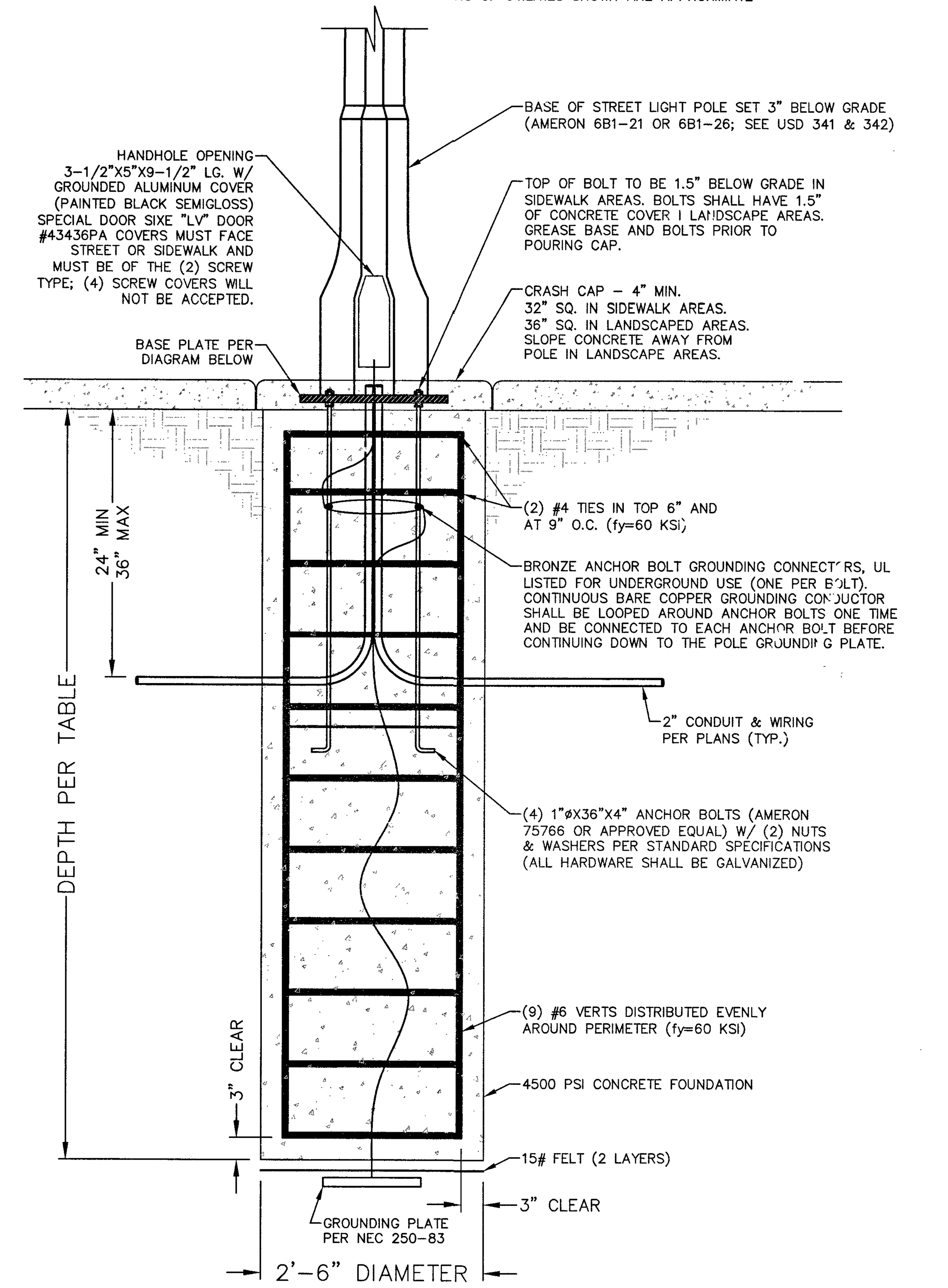

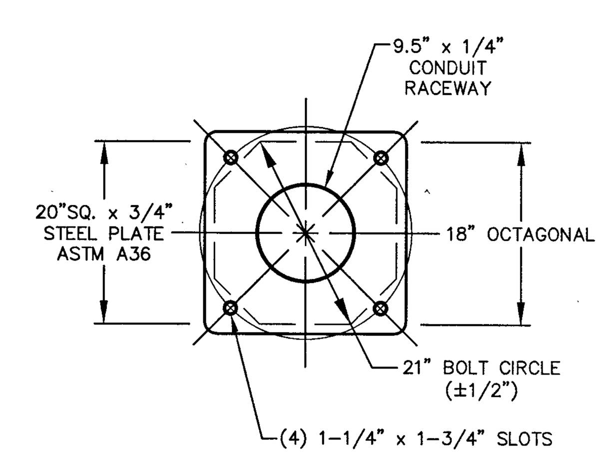

BASE DIAGRAM

FOUNDATION DEPTH				
POLE & ARM CONFIGURATION	SOIL TYPE			
	SAND/GRAVEL (ø=30°, Y=110pcf)	STIFF CLAY (C=1.0)	MEDIUM CLAY (C=0.60)	SOFT CLAY (C=0.25)
21' TALL (6B1-21) WITH 1 OR 2 ARMS UP TO 10' EACH	5'-3"	6'-6"	7'-4"	9'-6"
26' TALL (6B1-26) WITH 1 ARM UP TO 12'	5'-9"	6'-9"	7'-8"	8'-6"
26' TALL (6B1-26) WITH 2 ARMS UP TO 12' EACH	6'-3"	7'-3"	8'-4"	10'-0"

NOTES:
1. C = COHESION MEASURED IN KIPS PER SQUARE FOOT.
2. CONTRACTOR SHALL DETERMINE SOIL TYPE BY TAKING UNDISTURBED SAMPLES AS REQUIRED BY THE CITY ENGINEER.
3. ANALYSIS BY PROFESSIONAL STRUCTURAL ENGINEER ON FILE WITH THE CITY ENGINEER.

5/28/2017 8:31 AM
T:\CAD\161109\Drawings\Plot Drawings\c-161109-dt.dwg

11 STREET LIGHT POLE FOUNDATION

NOT TO SCALE

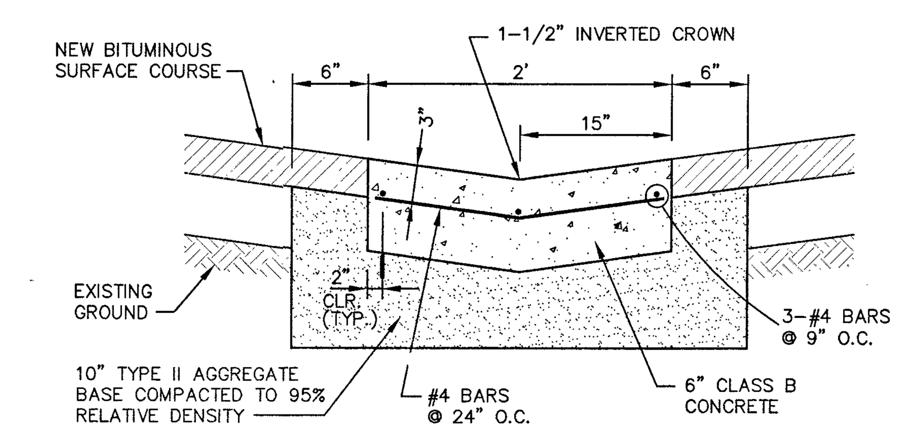

8 2' VALLEY GUTTER

NOT TO SCALE

PAVEMENT SECTION AS PROPOSED IN GEOTECHNICAL REPORT PREPARED BY:
GEOTEK, INC.
PROJ. NO.: 13092-LV
DATED: AUGUST 31, 2016

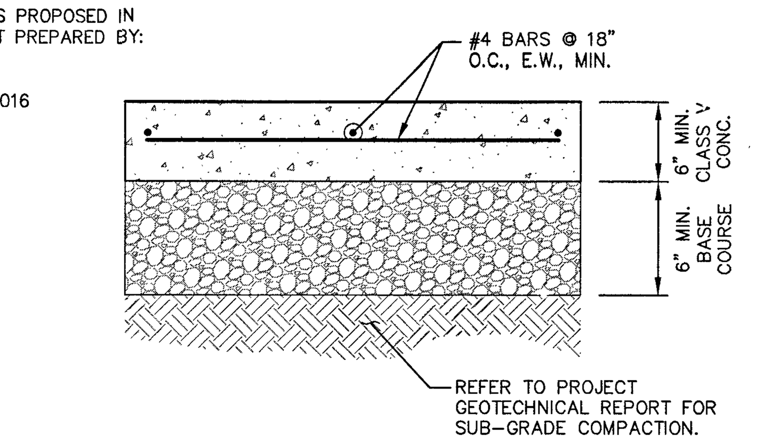

7 CONC. PAVEMENT SECTION

NOT TO SCALE

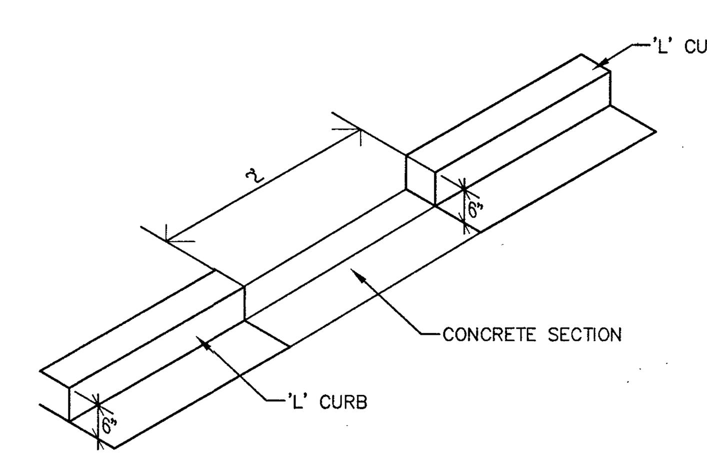

6 CURB CUT

NOT TO SCALE

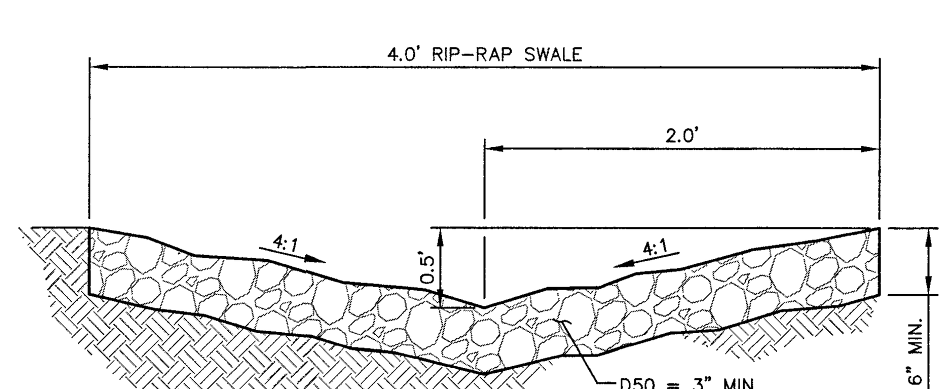

5 RIPRAP SWALE

NOT TO SCALE

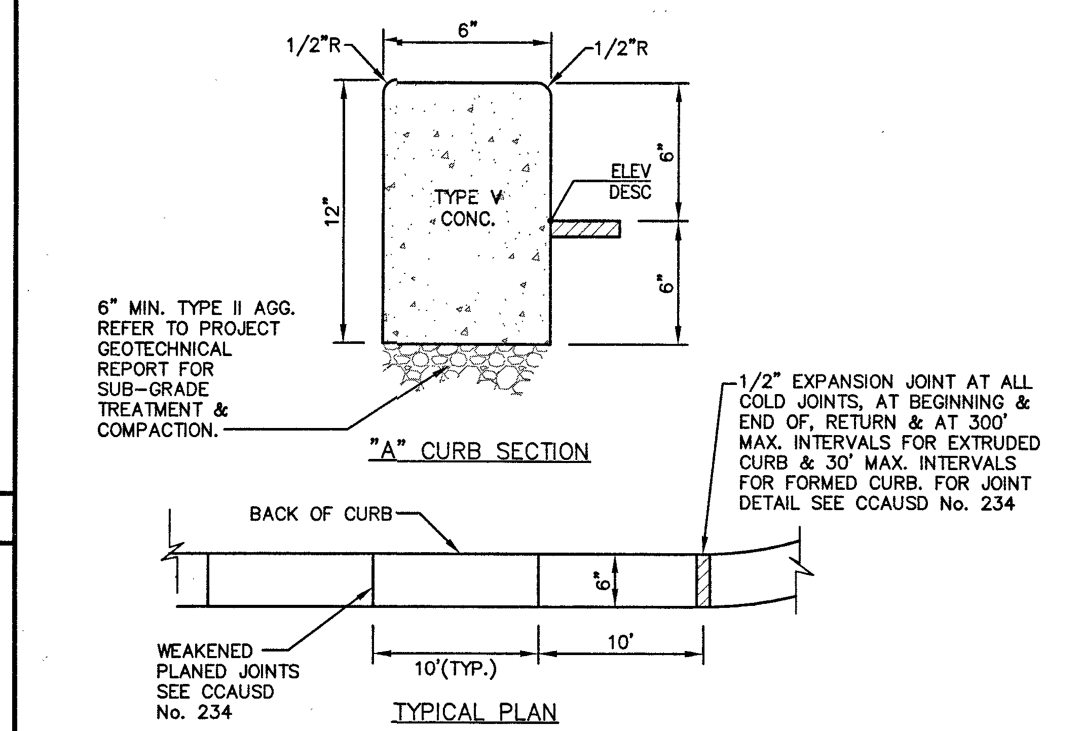

4 ON-SITE 'A' CURB

NOT TO SCALE

PAVEMENT SECTION AS PROPOSED IN GEOTECHNICAL REPORT PREPARED BY:
GEOTEK, INC.
PROJ. NO.: 13092-LV
DATED: AUGUST 31, 2016

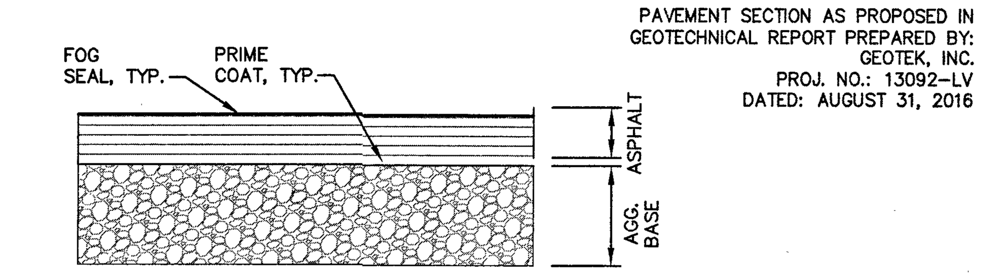

TYPE OF TRAFFIC	ASPHALT (inches)	TYPE II BASE COURSE (inches)
STANDARD DUTY	2	4
HEAVY DUTY	3	4

REFER TO PROJECT GEOTECHNICAL REPORT FOR ALL SUB-GRADE PREPARATION & COMPACTION.

NOTE: ALL AGGREGATE BASES SHALL BE COMPACTED PER GEOTECHNICAL REPORT PRELIMINARY PAVEMENT SECTIONS SHALL BE VERIFIED WITH THE FINAL PAVEMENT SECTION RECOMMENDATION REPORT (MPSR) PRIOR TO CONSTRUCTION. IF FINAL PAVEMENT SECTIONS ARE DIFFERENT. A REVISION TO THE IMPROVEMENT PLANS WILL BE REQUIRED.

3 AC PAVEMENT SECTION

NOT TO SCALE

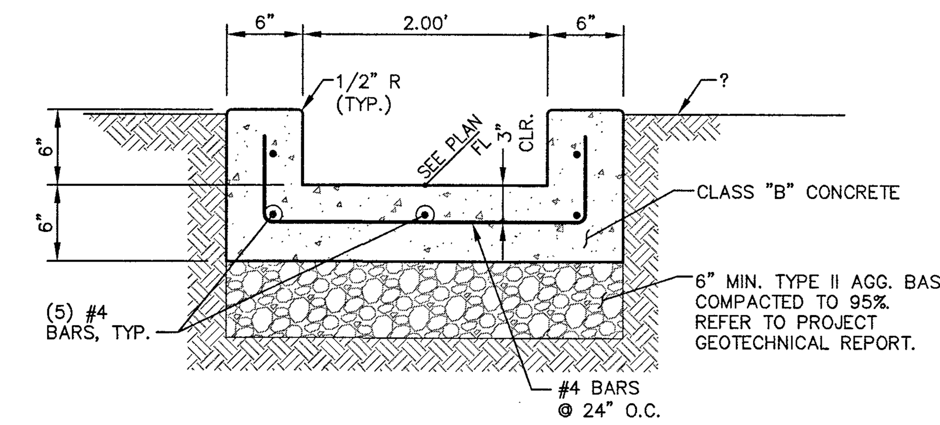

NOTES:
1. EXPANSION JOINTS REQUIRED AT ALL LOCATIONS WHERE CHANNEL MEETS CURB.
2. WEAKENED PLANE JOINTS REQUIRED AT 10' MAX. SPACING.
3. REFER TO PROJECT GEOTECHNICAL REPORT FOR TYPE II AGGREGATE OR SELECTED MATERIAL DEPTH AND COMPACTION, SUB-GRADE PREPARATION, MEMBRANES AND OTHER PLACEMENT RECOMMENDATIONS.

2 CONC. 'U' CHANNEL

NOT TO SCALE

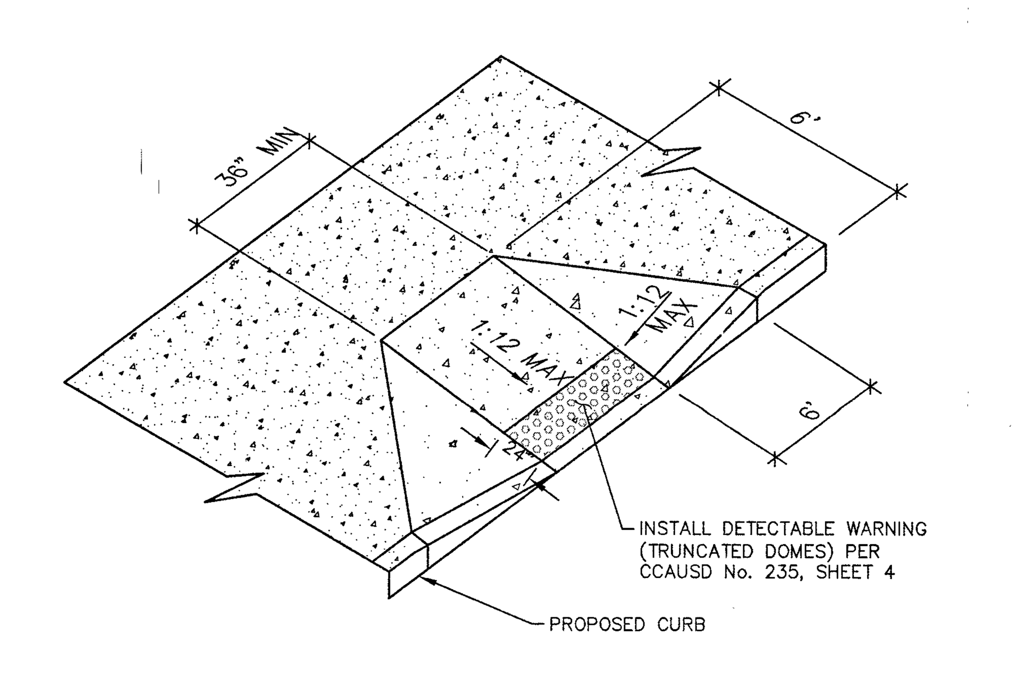

1 MODIFIED CURB RAMP

NOT TO SCALE

REV.:	DATE:	BY:	DESCRIPTION:

Lochsa engineering
6345 South Jones Blvd.
Suite 100
Las Vegas, NV 89118
Phone (702) 365-9312
Fax (702) 365-9317
www.lochsa.com

SHEET: DETAIL SHEETS SHEET 1 OF 2

TITLE: DEER SPRINGS AND HUALAPAI CITY OF LAS VEGAS, NEVADA

PROJECT No.: 161109

DATE: 4/25/2017

SCALE: ----

DRAWN BY: MGZ

DESIGNED BY: MGZ

CHECKED BY: JLI

SEAL

PROFESSIONAL ENGINEER - STATE OF NEVADA - CIVIL - No. 11286 - EX. 12-31-18

5/24/2017

10745000

SHEET No. C6.01

SHEET 13 OF 15

CLV No. 69418

HTE No. 17-19756

PROJ#:125376 AGR:116293 QS:125-19-NW

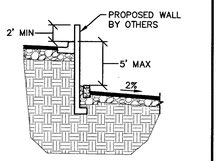

G CROSS SECTION N.T.S.

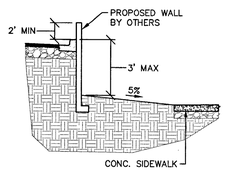

D CROSS SECTION N.T.S.

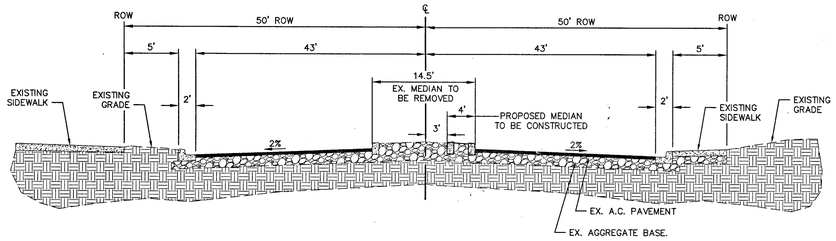

E CROSS SECTION - 17+50 NOT TO SCALE

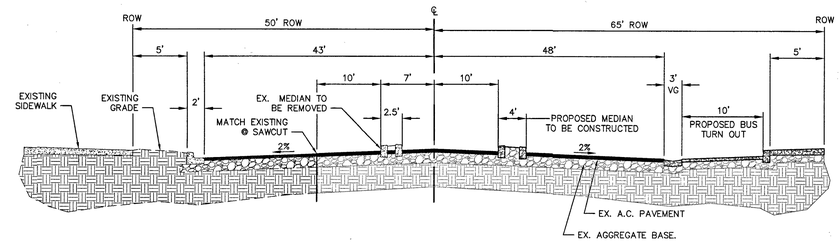

F CROSS SECTION - STATION: 13+50 NOT TO SCALE

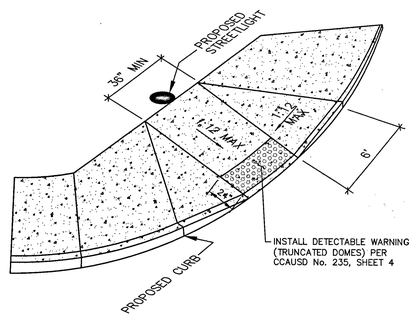

15 MODIFIED CURB RAMP NOT TO SCALE

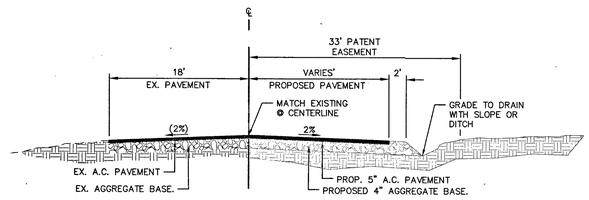

H DEER SPRINGS SECTION

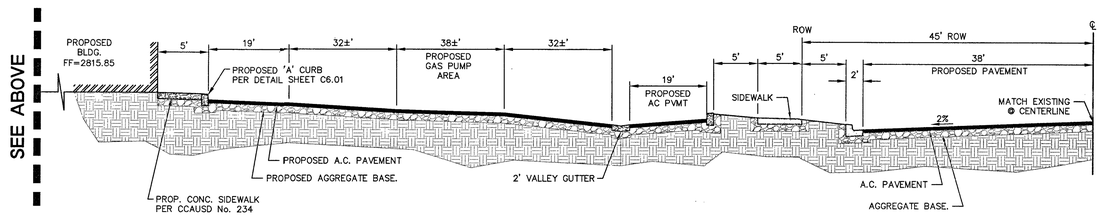

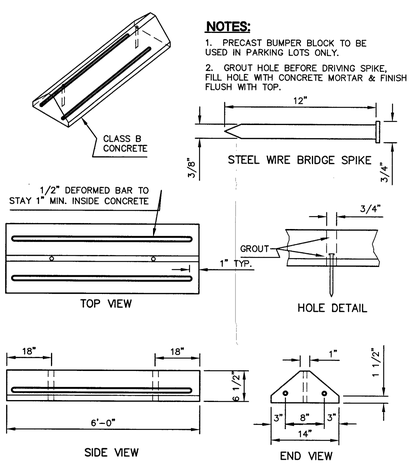

14 PARKING BUMPER NOT TO SCALE

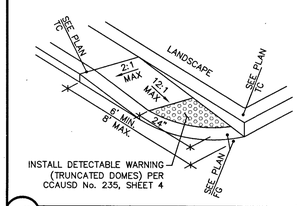

16 CURB RAMP NOT TO SCALE

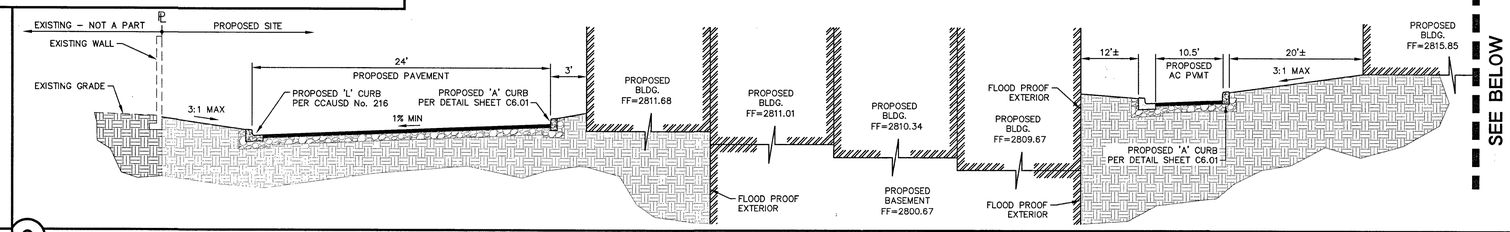

C NORTH TO SOUTH PROPERTY SECTION NOT TO SCALE

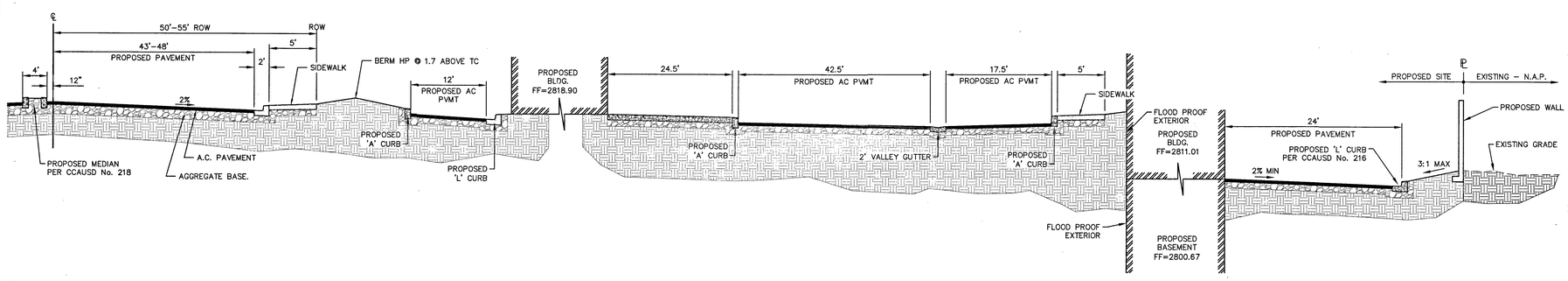

B WEST TO EAST PROPERTY SECTION NOT TO SCALE

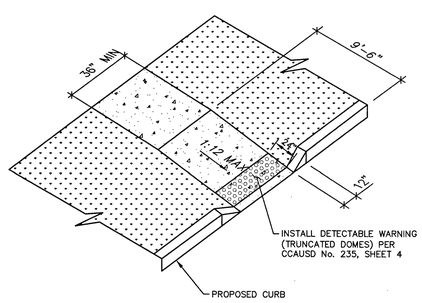

13 MODIFIED CURB RAMP NOT TO SCALE

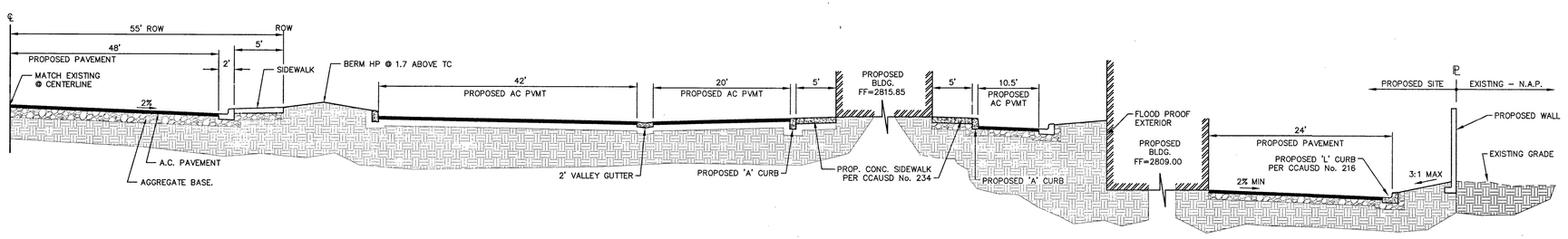

A WEST TO EAST PROPERTY SECTION NOT TO SCALE

REV.:	DATE:	BY:	DESCRIPTION:

Lochsa engineering
6345 South Jones Blvd.
Suite 100
Las Vegas, NV 89118
Phone (702) 363-8672
Fax (702) 363-9317
www.lochsa.com

DETAIL SHEETS
SHEET 2 OF 2

DEER SPRINGS AND HUALAPAI
CITY OF LAS VEGAS,
NEVADA

SHEET

TITLE

PROJECT No.: 161109

DATE: 4/25/2017

SCALE: ----

DRAWN BY: MGZ

DESIGNED BY: MGZ

CHECKED BY: JLI

SEAL
PROFESSIONAL ENGINEER - STATE OF NEVADA
TED EGERTON
Exp. 12-31-18
CIVIL
No. 11286
5/24/2017

SHEET No.
C6.02
SHEET 14 OF 15

CLV No. 69418
HTE No. 17-19756

10745000

6/12/2017 1:25:09 PM
J:\2016\161109\Drawings\Plot_Drawings\c-161109-dt.dwg

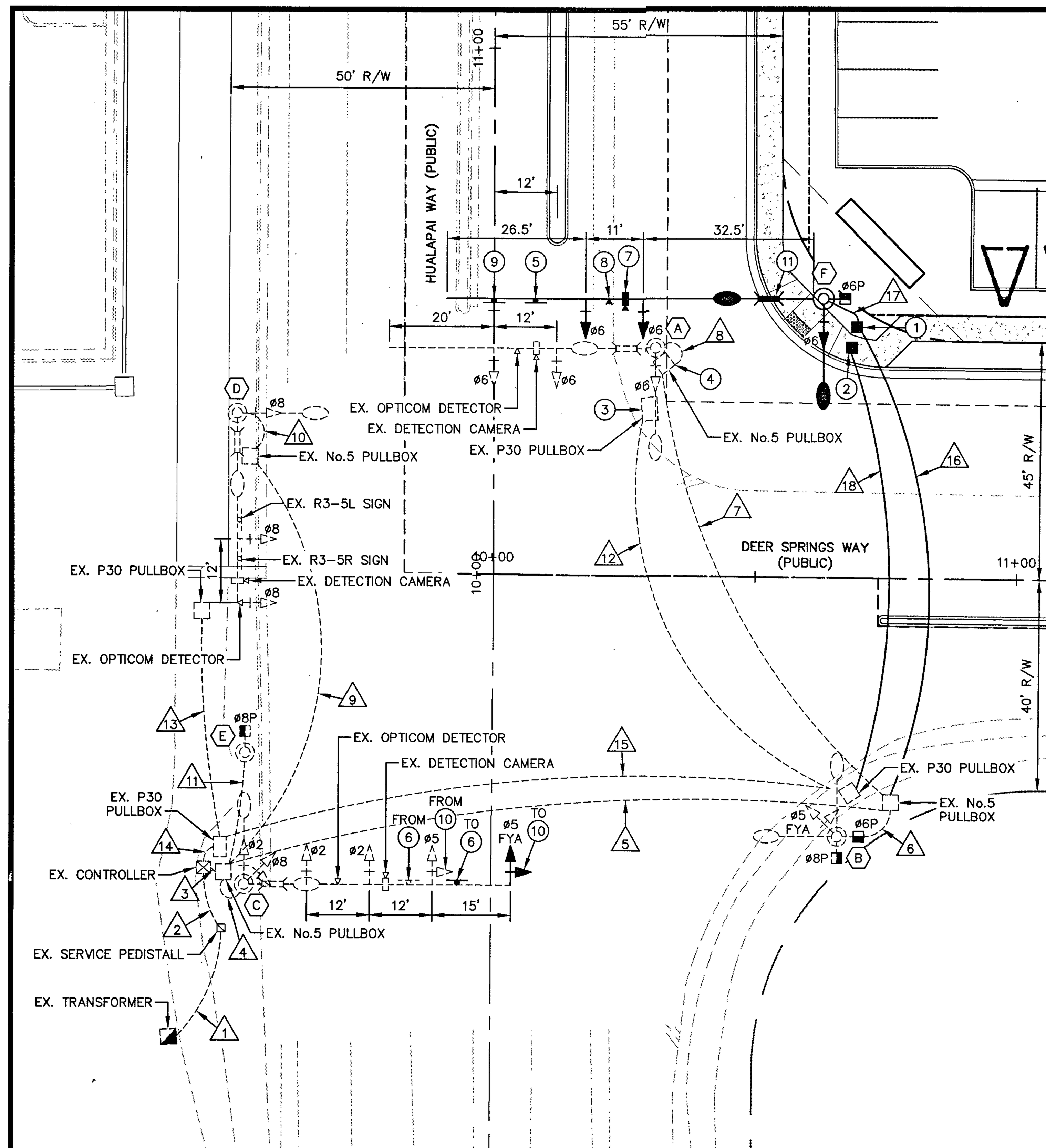

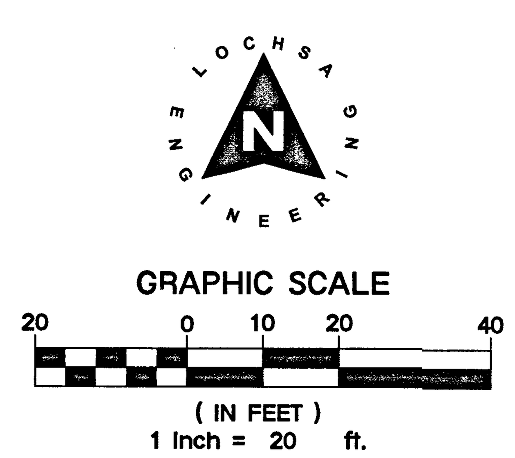

A.P.N.:
125-19-202-006

BASIS OF BEARINGS:
SOUTH 89°47'00" EAST, BEING THE BEARING OF THE SOUTH LINE OF THE SOUTHWEST QUARTER (SW 1/4) OF THE SOUTHWEST QUARTER (SW 1/4) OF SECTION 19, TOWNSHIP 19 SOUTH, RANGE 60 EAST, M.D.M., ALSO BEING THE CENTERLINE OF CENTENNIAL PARKWAY AS MEASURED BETWEEN HAULAPAI WAY AND CONQUISTADOR STREET AS SHOWN ON FILE 107, PAGE 31 OF SURVEYS IN THE RECORDER'S OFFICE, CLARK COUNTY, NEVADA.

BENCHMARK:
RIVET & PLATE IN TOP OF CURB AT THE SOUTHEAST CORNER OF THE BRIDGE OVER CLARK COUNTY HIGHWAY 215 ON HUALAPAI. ELEVATION – 853.317 (METERS) / 2799.59 (U.S. SURVEY FEET) NORTH AMERICAN VERTICAL DATUM OF 1988

PROPOSED POLE SCHEDULE

POLE	LOCATION STATION	TYPE / FNDN	SIG. ARM QUAD	SIG. ARM LNG	LUM. ARM QUAD	LUM. ARM LNG	SIGNALS (VEH.) TYPE	SIGNALS (VEH.) QUAD	SIGNALS (PEDESTRIAN) TYPE	SIGNALS (PEDESTRIAN) QUAD	PED. PUSH BUTTON QUAD	SIGN ARROW	REMARKS
A	EXISTING	XX–A / EX	EX	50'	EX EX	15' 15'	(2)M–2 (1)B–1T	EX EX	–	–	–	–	EX. POLE TO BE REMOVED UPON ACTIVATION OF POLE F. RELOCATE ISNS TO POLE F.
B	EXISTING	XX / EX	–	–	EX EX	15' 15'	(1)B1–4	EX	W–OT W–3T	EX 3	EX 4	RT LT	EX. POLE. REMOVE EX. W–OT PEDESTRIAN SIGNAL HEAD. REPLACE W/ W–3T PEDESTRIAN SIGNAL HEAD. INSTALL PEDESTRIAN PUSH BUTTON.
C	EXISTING	XX–A / EX	EX	50'	EX EX	15' 15'	(1)M–4 (2)M–2 (1)B–2T	EX EX EX	–	–	–	–	EX. POLE. RELOCATE EXISTING M–4 SIGNAL HEAD.
D	EXISTING	XX–30 / EX	EX	35'	EX EX	15' 15'	(2)M–2 (1)B–1T	EX EX	–	–	–	–	EX. POLE.
E	EXISTING	1–B / EX	–	–	–	–	–	–	W–OT	EX	EX	RT	EX. POLE.
F	(HUALAPAI) 10+52.49 62.94 R	XX–B / TYPE 'M'	4	70'	3 4	15' 15'	(2)M–2 (1)B–1T	MA 1	W–OT	1	4	RT	NEW POLE. RELOCATED ISNS FROM POLE A.

CONDUIT AND WIRE SCHEDULE

WIRE & CONDUCTOR	FROM	TO	1	2	3	4	5	6	7	8	9	10	11	12	13	14	15	16	17	18	REMARKS
EXISTING WIRE	RS–19	SERVICE PEDESTAL	X																		
EX(4)–#4 AWG THW EX(1)–#8 SERVICE ENTRANCE	SERVICE PEDESTAL	CONTROLLER		X																	
EX(1) 25 COND #14 EX(4) #10 AWG THW EX(1) #8 AWG THW EX 8281 COAX VIDEO EX(3) #16 WIRE EX OPTICOM CABLE	CONTROLLER	POLE A			X		X		X	X											REMOVF EXISTING WIRE UPON ACTVATION OF POLE F.
EX(1) 25 COND #14 EX(4) #10 AWG THW EX(1) #8 AWG THW EX(3) #16 WIRE	CONTROLLER	POLE B			X		X	X													
EX(1) 25 COND #14 EX(4) #10 AWG THW EX(1) #8 AWG THW EX 8281 COAX VIDEO EX(3) #16 WIRE EX OPTICOM CABLE	CONTROLLER	POLE C			X	X															
EX(1) 25 COND #14 EX(4) #10 AWG THW EX(1) #8 AWG THW EX 8281 COAX VIDEO EX(3) #16 WIRE EX OPTICOM CABLE	CONTROLLER	POLE D			X						X	X									
EX 15 COND #14 EX(1) #8 AWG THW	CONTROLLER	POLE E			X								X								
EX PULL STRING & TRACER WIRE	CONTROLLER	EXISTING PULLBOX													X	X	X				
EX(2) #4 AWG THW EX(1) #8 AWG THW	CONTROLLER	POLE LUMINARES			X	X	X	X			X	X									
(1) 25 COND #14 (4) #4 AWG THW (1) #8 AWG THW 8281 COAX VIDEO (3) 16 COND PVC JACKED (1) OPTICOM CABLE	CONTROLLER	POLE F			X		X											X	X		
(2) #4 AWG THW (1) #8 AWG THW	CONTROLLER	POLE F STREETLIGHT			X		X											X	X		
(1) #8 TRACER WIRE	CONTROLLER	FAST PULLBOX (NEC)														X	X			X	
EX(2) #4 AWG THW EX(1) #8 AWG THW	CONTROLLER	POLE A LUMINARE			X		X		X	X											REMOVE EXISTING WIRE UPON ACTIVATION OF POLE F.
EX PULL STRING & TRACER WIRE	CONTROLLER	EXISTING PULLBOX												X		X	X				REMOVE EXISTING WIRE.
CONDUIT SIZE NOTE: (E) INDICATES EXISTING CONDUIT NOTE: (N) INDICATES NEW CONDUIT			1–2"(E)	1–2"(E)	4–3"(E)	1–3"(E)	2–3"(E)	1–3"(E)	3–3"(E) *	1–3"(E) *	2–3"(E)	1–3"(E)	1–2"(E)	1–4"(E) *	1–4"(E)	1–4"(E)	1–4"(E)	3–3"(N)	1–3"(N)	1–4"(N)	* ABANDON CONDUIT UPON ACTIVATION OF POLE F.

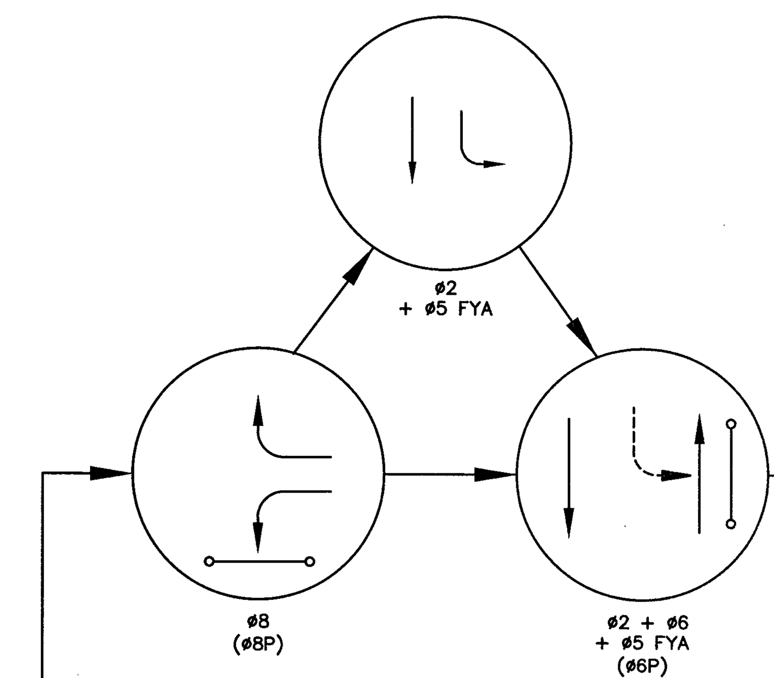

PHASE DIAGRAM
FLASHING OPERATION SHALL BE ALL RED OPTICOM PREEMPTION PHASES ø2, ø6, ø8

CITY OF LAS VEGAS TRAFFIC SIGNAL NOTES (CIP):

1. ALL WORK PERFORMED ON ANY TRAFFIC SIGNAL COMPONENT MUST BE UNDER THE DIRECT ON-SITE SUPERVISION OF AN IMSA CERTIFIED TECHNICIAN. THE LEVEL OF CERTIFICATION REQUIRED SHALL BE LEVEL II.
2. THE CONTRACTOR SHALL BE RESPONSIBLE FOR DAMAGE TO ALL EXISTING UTILITIES. THE LOCATIONS OF UNDERGROUND UTILITIES AS SHOWN ON THE PLANS ARE APPROXIMATE ONLY. THE CONTRACTOR SHALL NOTIFY ALL UTILITY COMPANIES TO VERIFY IN THE FIELD THE LOCATIONS OF THEIR INSTALLATIONS 72 HOURS PRIOR TO CONSTRUCTION.

CALL–BEFORE–YOU–OVERHEAD	1–702–227–2929
CALL–BEFORE–YOU–DIG	1–800–227–2600
STREETLIGHTS	1–702–229–6331
F.A.S.T.	1–702–432–5300

3. ALL TRAFFIC SIGNAL INSTALLATIONS SHALL CONFORM TO THE UNIFORM STANDARD DRAWINGS SPECIFICATIONS AND SPECIAL PROVISIONS FOR PUBLIC WORKS' CONSTRUCTION OFF-SITE IMPROVEMENTS, CLARK COUNTY AREA, NEVADA, VOLUMES I AND II, ADOPTED BY THE REGIONAL TRANSPORTATION COMMISSION APRIL 8, 1992 WITH ALL SUBSEQUENT REVISIONS. BRACKET MOUNTED (SIDE-MOUNTED) VEHICLE SIGNAL ASSEMBLIES WITH 2 OR MORE SIGNAL HEADS SHALL HAVE AN ADDITIONAL ELBOW AS SHOWN IN UNIFORM STANDARD DRAWING NUMBER 863 AND SHOWN AS OPTION B IN UNIFORM STANDARD DRAWING NUMBER 844, AND SHALL HAVE A MENERALLAC SUPPORT AS SHOWN IN UNIFORM STANDARD DRAWING NUMBER 863 IF ONE OF THE SIGNAL HEADS CONTAINS 4 OR MORE SIGNAL MODULES.
4. SERVICE SHALL HAVE 1–60 AMP SINGLE POLE BREAKER FOR SIGNAL, AND ONE 40 AMP SINGLE POLE BREAKERS FOR STREET LIGHTS. SERVICE SHALL BE 200 AMP PADMOUNT.
5. LINE SIDE OF METER TO BE WIRED WITH THREE #3/0 AWG THW. LOAD SIDE SHALL BE WIRED WITH FOUR #4 AWG THW (2 BLACK, 2 WHITE) AND ONE #8 AWG THW (GREEN).
6. LUMINAIRES ON ALL SIGNAL POLES SHALL BE AN APPROVED LED EQUAL TO A 400 WATT HIGH PRESSURE SODIUM CUTOFF (G.E. M400A) WITH MC–111 DISTRIBUTION PER SECTION 623 T.02.19 OF THE SPECIAL PROVISIONS. EACH LUMINAIRE SHALL HAVE AN INDIVIDUAL 1000 WATT P.E. CONTROL. FOR LUMINAIRES THERE SHALL BE 2(TWO)–#4 AWG THW CONDUCTORS FROM THE SERVICE TO THE CABINET. IN THE CABINET, THE #4 AWG THW CONDUCTORS SHALL BRANCH OFF INTO #10 AWG THW CONDUCTORS INDIVIDUALLY FUSED WITH 10 AMP FUSES. THERE SHALL BE NO SPLICES BETWEEN THE CABINET AND LUMINAIRE FIXTURES.
7. THE INTERNALLY ILLUMINATED STREET NAME SIGNS SHALL BE WIRED TO THE LUMINAIRES PHOTO CELL FOR CONTROL WITH #10 AWG THW COPPER STRANDED WIRE (TYPICAL). THE SIGN SHALL BE WIRED TO THE LUMINAIRE DIRECTLY ABOVE IT. IN THE EVENT THERE IS NO LUMINAIRE ON THE TRAFFIC SIGNAL POLE, THE 1000 WATT P.E. CONTROL SHALL BE MOUNTED ON THE POLE CAP. ALL NEW ILLUMINATED STREET NAME SIGNS SHALL HAVE LIGHT EMITTING DIODE (LED) LAMPS PER SECTION 623 T.02.16 OF THE SPECIAL PROVISIONS.
8. CHECK CONDUIT AND CABLE SCHEDULE FOR CONDUIT, CABLE, AND WIRE SIZE. VERIFY ALL EXISTING CONDUIT RUNS.
9. ALL PULLBOXES SHALL BE IN ACCORDANCE WITH UNIFORM STANDARD DRAWINGS NO. 705, NO. 706, AND NO. 707.
10. TRAFFIC SIGNAL CABLE SHALL BE 15 OR 25 CONDUCTOR #14 AWG SOLID (TYPICAL) CABLE AND SHALL CONFORM TO IMSA SPEC. NO. 20–1.
11. PEDESTRIAN PUSH BUTTONS SHALL BE AUDIBLE TACTILE "POLARA NAVIGATOR" TYPE (2 WIRE SYSTEM) OR CAMPBELL COMPANY ADVANCED ACCESSIBLE PEDESTRIAN SYSTEM BUTTONS WITH AAPS APC (CONTROLLER) IN ACCORDANCE WITH CITY OF LAS VEGAS SPECIAL PROVISIONS AND SECTION 623 OF THE CCA USS. PUSH BUTTON SIGNS SHALL BE R10–3E PER MUTCD, 2009 EDITION, WITH FULL MOUNTING BRACKETS, AS MODIFIED BY THE MANUFACTURER TO FIT ON A 9"X12" SIGN, AND SHALL BE PORCELAIN-ENAMELED METAL. ALL PUSH BUTTONS TO BE MOUNTED 42" ABOVE SIDEWALK. THE MAXIMUM HORIZONTAL REACH DISTANCE IS TO BE 10". SIDEWALK RAMPS WILL BE ACCORDING TO U.S.D. NO. 235 (1–4) LATEST EDITION. WHEN AN EXISTING SIGNAL WITH EXISTING AUDIBLE-TACILE PUSH BUTTONS IS MODIFIED, THE CONTRACTOR SHALL VERIFY NEW PEDESTRIAN PUSH BUTTONS OR CABINET EQUIPMENT MATCHES THE MANUFACTURE AND MODEL OF ANY EXISTING EQUIPMENT SCHEDULED TO REMAIN, TO PROVIDE A FULLY FUNCTIONING SYSTEM. THE CONTRACTOR SHALL PROVIDE AND INSTALL ALL CABINET EQUIPMENT, INCLUDING THE PEDESTRIAN PUSH BUTTON CONTROL UNIT, INTERFACE PANEL AND ANY REQUIRED HARNESSES, TO PROVIDE A FULLY FUNCTIONING SYSTEM.
12. THE ROUTING AND TERMINATION OF CONDUITS AND THE PLACING OF POLES AND CABINETS SHALL BE AS INDICATED ON THE PLANS. ALL CHANGES SHALL BE APPROVED BY THE ENGINEER.
13. MAST ARM R10–12 SIGNS TO BE ADJACENT (NO GAP) TO THE M–5 SIGNAL HEAD. WHERE FLASHING YELLOW ARROW LEFT TURN SIGNALS ARE USED, A MAST ARM R10–12F 'LEFT TURN YIELD ON FLASHING YELLOW ARROW" SIGN SHALL BE MOUNTED ADJACENT TO THE M–4 SIGNAL HEAD.
14. TRAFFIC SIGNAL CABINET SHALL BE A TYPE VIII CABINET UNLESS OTHERWISE SPECIFIED IN THE PLANS. THIS IS COMMONLY REFERRED TO AS AN "R" CABINET. THE CABINET SHALL CONFORM TO THE CLARK COUNTY AREA UNIFORM STANDARD DRAWINGS AND SPECIFICATIONS AND THE CITY OF LAS VEGAS SPECIAL PROVISIONS. INSTALL CABINET NEAR THE R.O.W. LINE OR AS SHOWN ON THE DRAWINGS. THE TRAFFIC SIGNAL CONTROLLER CABINET, SHALL BE EQUIPPED WITH 16 LOAD BAY POSITIONS,SHALL BE A 48 DETECTOR CHANNEL R CABINET AND SHALL INCLUDE TWO (2) RACK-MOUNTED, 12 SLOT, LOOP DETECTION RACKS, WITH 2 DETECTOR LOOP CHANNELS PER SLOT FULLY WIRED SO THAT ALL CHANNELS ARE USABLE AND 4 CHANNEL SLOTS THAT CAN ACCOMMODATE VIDEO DETECTION CARDS. THE CABINET SHALL CONTAIN A 764 OPTICOM PHASE SELECTOR IN A 760 RACK, WITH A 768 AUXILIARY INTERFACE PANEL MOUNTED IN THE CABINET AND FULLY WIRED FOR GREEN SENSE CAPABILITIES.
15. THE CONTRACTOR SHALL SUPPLY A MALFUNCTION MANAGEMENT UNIT (MMU) AND TRAFFIC SIGNAL CONTROLLER TO THE CITY OF LAS VEGAS TRAFFIC SIGNAL REPAIR SHOP A MINIMUM OF FOURTEEN DAYS PRIOR TO SIGNAL TURN-ON OR PRIOR TO CONVERTING TO A NEW PHASING SCHEME, FOR TESTING AND PROGRAMMING PURPOSES. THE CONTROLLER SHALL BE A NAZTEC 980 ATC TS2 TYPE 2 NTCIP COMPLIANT SIGNAL CONTROLLER WITH INTSTALLED AND LICENSED APOGEE CONTROLLER SOFTWARE, LATEST VERSION, AND THE MMU SHALL BE A MODEL MMU–1600GE AS MANUFACTURED BY RENO A&E., OR APPROVED EQUAL. THE CONTRACTOR SHALL DELIVER THE CONTROLLER AND MMU TO, AND PICKUP THE CONTROLLER AT 2824 E. CHARLESTON BOULEVARD. CONTRACTOR SHALL NOTIFY THE TRAFFIC SIGNAL REPAIR SHOP (229–6076) SEVEN DAYS PRIOR TO PICK UP. THE CITY, AT ITS DISCRETION, MAY PROVIDE A DIFFERENT MODEL OF MMU OR CONTROLLER FOR INITIAL TURN-ON, IN WHICH CASE CITY PERSONNEL WILL SWAP THE CONTROLLER OR MMU AFTER THE PROJECT IS ACCEPTED.
16. CONTRACTOR SHALL POTHOLE SIGNAL POLE LOCATIONS PRIOR TO ORDERING OF POLES.
17. ALL MAST ARMS TO BE HOT-DIP GALVANIZED BY THE MANUFACTURER THE MAST ARM IS TO BE FABRICATED WITH END TENON ONLY. THE END TENON SHALL BE FACTORY INSTALLED AND THE REMAINING TENONS SHALL BE FABRICATED IN THE FIELD AT THE LOCATION SHOWN ON THE PLANS OR AS DIRECTED BY THE TRAFFIC ENGINEER AND/OR HIS AUTHORIZED REPRESENTATIVE. FOR TENON FABRICATION DETAILS SEE CLARK COUNTY AREA U.S.D. NO. 808 SHEET 2. ALL WELDING SHALL CONFORM TO AWS D 2.0, "SPECIFICATION FOR WELDED HIGHWAYS AND RAILWAY BRIDGES," AND TO ANY ADDITIONAL REQUIREMENTS OF SECTION 623 OF THE SPECIFICATIONS. ALL EXPOSED WELDS, SHALL BE PAINTED AS PROVIDED FOR REPAIRING DAMAGED GALVANIZED SURFACES.
18. ALL VEHICLE AND PEDESTRIAN SIGNAL INDICATIONS SHALL HAVE LIGHT EMITTING DIODE (LED) TYPE INDICATIONS, IN CONFORMANCE TO CITY OF LAS VEGAS SPECIAL PROVISIONS AND TO SECTION 623 OF THE CCA USS. ALL PEDESTRIAN SIGNAL FACES SHALL PROVIDE 'WALKING PERSON", 'HAND", AND 'COUNTDOWN" MESSAGES AS PROVIDED BY DURALIGHT MODEL #JXM–400–VIEIL OR DIALIGHT MODEL #430–6479–001X, OR APPROVED EQUAL. THE 'COUNTDOWN" MESSAGE SHALL NOT FLASH. WHERE EXISTING SIGNALS ARE MODIFIED, THE CONTRACTOR SHALL VERIFY THAT LED PEDESTRIAN INDICATIONS FOR A SPECIFIC PHASE ARE OF THE SAME MANUFACTURE SO THAT THEY FUNCTION CORRECTLY, OR SHALL REPLACE ALL COUNTDOWN PEDESTRIAN INDICATIONS FOR THAT PHASE.
19. VIDEO DETECTION SYSTEMS WILL BE EITHER ITERIS EDGE 2 WITH EDGECONNECT PAK, (IP ADDRESSABLE); PEEK VIDEOTRAK IQ (WITH ETHERNET PORT); OR TRAFICON VIP WITH VIEWCOM (IP ADDRESSABLE). WHEN VIDEO DETECTION IS SPECIFIED ON THE TRAFFIC SIGNAL PLANS. ALL VIDEO DETECTION SYSTEMS WILL BE STAND ALONE SYSTEMS TO INCLUDE ALL NECESSARY EQUIPMENT TO PROGRAM THE VIDEO DETECTION SYSTEM. A PROGRAMMING "MOUSE", KEYPAD OR LAPTAOP COMPUTER (IF REQUIRED FOR PROGRAMMING THE VIDEO DETECTION SYSTEM) AND APPROPRIATE SOFTWARE WILL BE SUPPLIED WITH EACH VIDEO SYSTEM. PERSONAL COMPUTERS (PCS) MAY NOT BE SUBSTITUTED FOR LAPTOPS. A VIDEO MONITOR (COLOR FLAT SCREEN) 9" TO 13" WILL BE SUPPLIED WITH EACH VIDEO DETECTION SYSTEM. EACH VIDEO CAMERA WILL HAVE POWER AND VIDEO CABLE DIRECTLY FROM THE CABINET. COAXIAL CABLE WILL BE TYPE 8281 (SOLID CENTER CONDUCTOR). CAMERAS THAT USE A PREFABRICATED CABLE INTEGRATING POWER AND COAXIAL CABLE INTO A SINGLE WEATHERPROOF CONNECTOR ARE ACCEPTABLE. "BNC" ARE THE ONLY ACCEPTABLE TERMINATION OF COAXIAL CABLES. CAMERAS WILL BE MOUNTED PER MANUFACTURER'S RECOMMENDATIONS AND PER CLV TRAFFIC ENGINEER APPROVAL. VIDEO CAMERAS SHALL BE COLOR AND SHALL BE MOUNTED ON A MINIMUM 6 FOOT RISER ON THE SIGNAL MAST ARM WITH EXTENSION BRACKETS (TYPE AB–0166–5–62 OR EQUIVALENT). THE LOCATION OF THE CAMERA ON THE MAST ARM SHALL BE APPROVED BY THE TRAFFIC SIGNAL SUPERVISOR. A VIDEO FILTER (CX06–BNYC OR EQUIVALENT) WILL BE INSTALLED IN THE SIGNAL CABINET FOR EACH CAMERA VIDEO INPUT. VIDEO DETECTION PROCESSORS AND COMMUNICATIONS CARDS SHALL BE PROVIDED WITH THE LATEST VERSIONS OF THE MANUFACTURER'S SOFTWARE. THE CONTRACTOR SHALL AIM CAMERAS AND PROGRAM AND CONFIGURE THE VIDEO DETECTION PROCESSORS TO PROVIDE A FULLY FUNCTIONING SYSTEM.
20. WHERE NEW LOOPS WILL BE OVERLAID WITH NEW PAVEMENT, LOOP DETECTORS SHALL BE PREFORMED LOOPS AS MANUFACTURED BY RENO A & E OR NEVER-FAIL LOOP SYSTEMS, AND ALL LOOPS SHALL BE INSTALLED IN THE ROADWAY PRIOR TO PLACEMENT OF THE FINAL PAVEMENT LIFT. WHERE NEW LOOPS ARE INSTALLED THAT ARE NOT OVERLAID WITH NEW PAVEMENT, LOOPS SHALL BE CABLE-IN-DUCT PER SECTION 623 T.02.04.C OF THE CITY OF LAS VEGAS SPECIAL PROVISIONS. LOOP LEAD-IN CABLE SHALL BE 6-PAIR 18 AWG MULTIPLE CONDUCTOR CABLE AS SPECIFIED IN SECTION 623T.02.04 OF THE CLV SPECIAL PROVISIONS. ALL WIRING HARNESSES, RACK POSITIONS, AND LOOP LEAD-IN CABLE SHALL BE CLEARLY MARKED AS TO THE APPROPRIATE PHASE AND LETTER DESIGNATION TO WHICH IT BELONGS AS SHOWN ON THE TRAFFIC SIGNAL PLANS. LOOPS SHALL BE LOCATED AS SHOWN ON THE TRAFFIC SIGNAL PLANS AND APPROVED BY THE CLV TRAFFIC ENGINEERING DIVISION PRIOR TO INSTALLATION. REFER TO SECTION 623T.02.04 OF THE CLV SPECIAL PROVISIONS FOR ADDITIONAL REQUIREMENTS.
21. OPTICAL PREEMPTION UNITS WILL BE GLOBAL TRAFFIC TECHNOLOGIES (ENCODING CAPABLE), MODEL 764 OPTICOM PHASE SELECTOR INSTALLED IN A MODEL 760 RACK WITH A MODEL 768 AUXILIARY INTERFACE PANEL (AIP) MOUNTED IN THE CABINET AND FULLY WIRED FOR GREEN SENSE CAPABILITIES. OPTICAL SENSORS WILL BE MODEL 721 WITH ONE DETECTOR PER DIRECTION, UNLESS SHOWN OTHERWISE IN THE PLANS, AND WILL BE INTERFACED TO THE TRAFFIC SIGNAL CONTROLLER CABINET WITH M–138 CABLE. THE SOUTHBOUND OPTICOM DETECTOR SHALL BE WIRED TO INPUT PREEMPTS ON CHANNEL 1 IN THE PHASE SELECTOR, EASTBOUND ON CHANNEL 2, NORTHBOUND ON CHANNEL 3, AND WESTBOUND ON CHANNEL 4, UNLESS VARIATIONS ARE APPROVED BY THE TRAFFIC SIGNAL SUPERVISOR. WHEN 764 PHASE SELECTORS ARE ADDED TO A CABINET WITHOUT A 768 AIP, THE CONTRACTOR SHALL INSTALL AND WIRE A NEW 768 AIP.
22. IF THE IMPROVEMENTS NECESSITATE THE OBLITERATION, TEMPORARY CONSTRUCTION, TEMPORARY REMOVAL, OR RELOCATION OF ANY EXISTING TRAFFIC PAVEMENT MARKING, SUCH PAVEMENT MARKING SHALL BE RESTORED OR REPLACED AT THE CONTRACTORS EXPENSE TO THE SATISFACTION OF THE CITY.
23. INTERCONNECT CABLE SHALL BE AS SHOWN IN THE WIRE SCHEDULE.
24. THE CONTRACTOR SHALL INSTALL CROSSWALKS, STOP BARS, STRIPING AND SIGNS AS IDENTIFIED ON THE PLANS.
25. WHERE THE PLANS CALL FOR REMOVAL AND SALVAGE OF EXISTING TRAFFIC SIGNAL EQUIPMENT, THE CONTRACTOR SHALL CONTACT KARL KELLEY, THE TRAFFIC SIGNAL SUPERVISOR, AT 702–229–4086 TO ARRANGE FOR DELIVERY TIMES AND LOCATIONS.
26. THE CONTRACTOR SHALL MAINTAIN EXISTING SIGNALS THROUGH THE LIFE OF THE PROJECT PER SECTION 623 G.03.01N OF THE CLV SPECIAL PROVISIONS.

REVISED 10/28/15

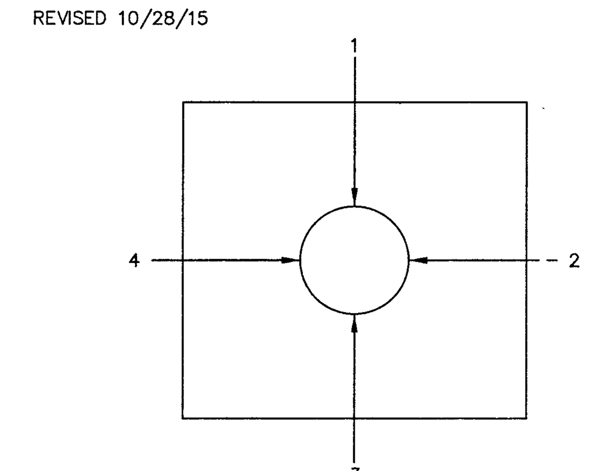

QUADRANT LOCATION ARM OR SIGNAL LOCATION (TOP VIEW)

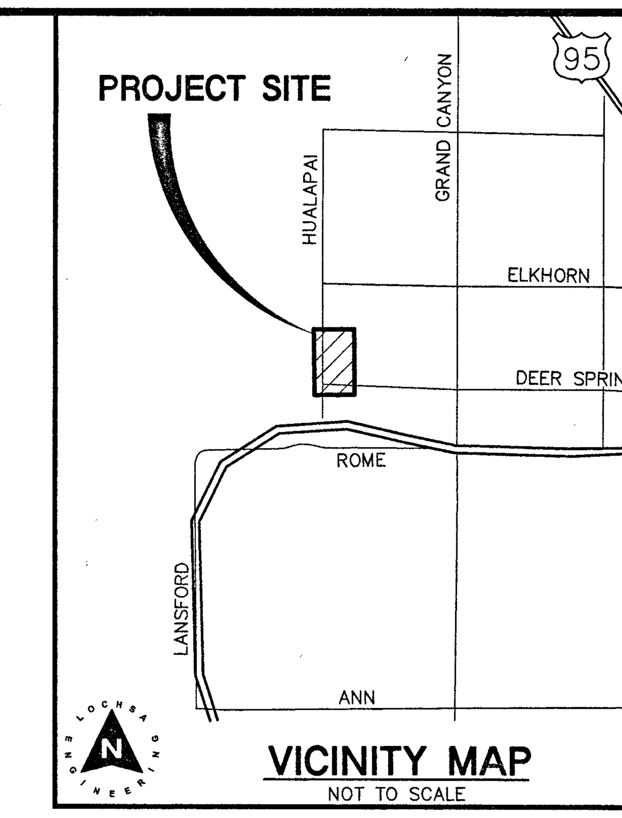

VICINITY MAP
NOT TO SCALE

NOTE:
REFER TO SHEET C5.01 FOR SIGNAGE/STRIPING PLAN

TRAFFIC CONSTRUCTION NOTES:
– ALL CONSTRUCTION TO BE DONE IN ACCORDANCE WITH "CLARK COUNTY AREA UNIFORM STANDARD DRAWINGS (CCAUSD)" LATEST EDITION.

1. INSTALL NO. 5 PULLBOX PER CCAUSD NO. 706.
2. INSTALL P30 PULLBOX PER CCAUSD NO. 761.
3. REMOVE EXISTING P30 PULLBOX.
4. REMOVE EXISTING NO 5 PULLBOX UPON POLE F ACTIVATION.
5. INSTALL R3–4 SIGN (36"X36").
6. RELOCATE R10–12F SIGN PER CCAUSD 857 (30"X36").
7. INSTALL DETECTION CAMERA.
8. INSTALL OPTICOM DETECTOR
9. INSTALL R3–2 SIGN (36"X36")
10. INSTALL TENON ON MASTER ARM. RELOCATE M–4 SIGNAL HEAD.
11. RELOCATE EXISTING ILLUMINATED STREET NAME SIGN FROM POLE A TO POLE F.

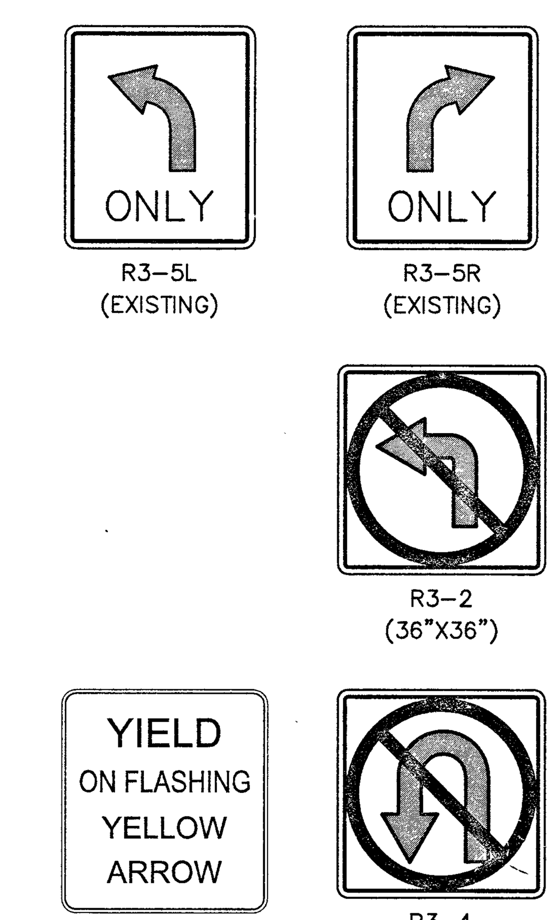

R3–5L (EXISTING)
R3–5R (EXISTING)
R3–2 (36"X36")
R10–12F (CCUASD 857) (30"X36")
R3–4 (36"X36")

NOTE:
LOCHSA ENGINEERING ASSUMES NO RESPONSIBILITY FOR EXISTING UTILITY LOCATIONS AND ELEVATIONS. THE UTILITIES SHOWN ON THIS PLAN ARE FROM THE BEST AVAILABLE INFORMATION. IT IS THE CONTRACTOR'S RESPONSIBILITY TO FIELD VERIFY THE LOCATION AND ELEVATION OF ALL UTILITIES, INCLUDING BUT NOT LIMITED TO, THE WATER, FIRE, SANITARY SEWER, STORM SEWER, TELEPHONE, POWER, GAS, AND IRRIGATION LINES PRIOR TO THE COMMENCEMENT OF CONSTRUCTION. IF CONFLICT EXISTS IN THE FIELD, THE CONTRACTOR IS TO NOTIFY THE PROJECT ARCHITECT, OWNER'S REPRESENTATIVE AND THE PROJECT ENGINEER IMMEDIATELY.

DESCRIPTION:	CL OR SURVEY LINE	PROPERTY LINE	ROW LINE	EASEMENT LINE	SAWCUT LINE	SCARP LINE	CONTOUR LINES	EDGE OF PAVEMENT	"A" TYPE CURBS	"L" TYPE CURBS	WALLS	FENCES	AC PAVEMENT	CONCRETE	SPOT ELEVATIONS	SIGNS	MANHOLE W/ DESCRIPTION	MANHOLE DESCRIPTIONS	FIRE HYDRANTS	GATE VALVES	REDUCERS	CLEAN OUTS	UTILITY BOX OR VAULT	BACKWATER VALVES	100w HPS STREETLIGHTS	150w HPS STREETLIGHTS	200w HPS STREETLIGHTS	250w HPS STREETLIGHTS
EXISTING:							(2210)								(12.34) BC		Ⓢ	Ⓢ = SANITARY SEWER Ⓓ = STORM DRAIN Ⓔ = ELECTRICAL Ⓣ = TELEPHONE						BWV				
PROPOSED:							2122								12.34 BC		Ⓢ							BWV				

LEGEND

5/28/2017 8:32 AM
T:\CAD\161109\Drawings\Plot Drawings\c-161109-traffic.dwg

REV.:	DATE:	BY:	DESCRIPTION:

Lochsa engineering
6345 South Jones Blvd.
Suite 100
Las Vegas, NV 89118
Phone (702) 365-9312
Fax (702) 365-9317
www.lochsa.com

SHEET: TRAFFIC PLANS SHEET 1 OF 1

TITLE: DEER SPRINGS AND HUALAPAI CITY OF LAS VEGAS, NEVADA

PROJECT No.:	161109
DATE:	4/25/2017
SCALE:	1"=20'
DRAWN BY:	MGZ
DESIGNED BY:	MGZ
CHECKED BY:	JLI

SEAL

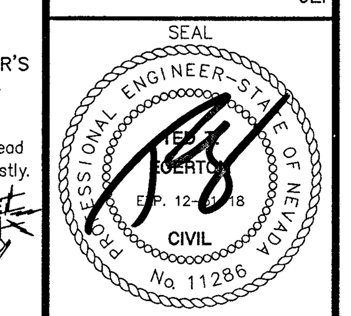

5/24/2017

107YS060
SHEET No. C7.01
SHEET 15 OF 15
CLV No. 69418
HTE No. 17-19756

LANDSCAPE LEGEND (BOULDERS)

SYMBOL	SIZE	COMMON NAME	BOTANICAL NAME	QUANTITY
	1500-2500 LB	GRANITE LANDSCAPE BOULDER	N/A	21

LANDSCAPE LEGEND (TREES)

SYMBOL	SIZE	COMMON NAME	BOTANICAL NAME	QUANTITY
	36 INCH BOX	SHOESTRING ACACIA	ACACIA STENOPHYLLA	47
	36 INCH BOX	RAYWOOD ASH	FRAXINUS OXYCARPA 'RAYWOOD'	45
	24 INCH BOX	BLUE PALO VERDE	PARKINSONIA FLORIDA	35
	36 INCH BOX	BLUE PALO VERDE	PARKINSONIA FLORIDA	6
	24 INCH BOX	CAROLINA LAUREL CHERRY	PRUNUS CAROLINIANA	7
	24 INCH BOX (10'-0" BROWN TRUNK HEIGHT)	MEXICAN FAN PALM	WASHINGTONIA ROBUSTA	26
	24 INCH BOX	SHOESTRING ACACIA	ACACIA STENOPHYLLA	7

LANDSCAPE LEGEND (SHRUBS)

SYMBOL	SIZE	COMMON NAME	BOTANICAL NAME	QUANTITY
	5 GALLON	TRAILING LANTANA-ORANGE	LANTANA MONTEVIDENSIS - ORANGE	86
	5 GALLON	TRAILING LANTANA-YELLOW	LANTANA MONTEVIDENSIS - YELLOW	98
	5 GALLON	AUTUMN SAGE	SALVIA GREGGII	54
	5 GALLON	GREEN DESERT SPOON	DASYLIRION ACROTRICHE	127
	5 GALLON	PURPLE FOUNTAIN GRASS	PENNISETUM SETACEUM 'RUBRUM' 'CUPREUM'	85
	5 GALLON	VELVET-LEAF SENNA	SENNA LINDHEIMERIANA (=CASSIA)	13

LANDSCAPE GENERAL NOTES:

1. INSTALLATION AND MAINTENANCE REQUIREMENTS OF NEW LANDSCAPING TO BE PROVIDED BY THE OWNER IN ACCORDANCE WITH TOWN CENTER DEVELOPMENT STANDARDS AND TITLE 19.
2. THE OWNER, DEVELOPER AND OCCUPANT OF THE PROPERTY ARE JOINTLY AND SEVERAL LY RESPONSIBLE FOR MAINTAINING OR ASSURING THE ONGOING MAINTENANCE OF INSTALLED LANDSCAPING SO THAT THE LANDSCAPING CONTINUES TO THRIVE. PRIOR TO THE ISSUANCE OF A BUILDING PERMIT, THE OWNER, DEVELOPER OR CONTRACTOR SHALL POST A PERFORMANCE BOND OR EQUIVALENT SECURITY TO ASSURE THE PERFORMANCE OF THE MAINTENANCE OBLIGATION FOR A MINIMUM OF TWO YEARS.
3. LANDSCAPE CONTRACTOR TO PROVIDE (4) FIVE GALLON SHRUBS PER REQUIRED TREE
4. ALL LANDSCAPE TO BE INSTALLED PER TITLE 19 REQUIREMENTS.
5. THE OWNER, DEVELOPER AND OCCUPANT OF THE PROPERTY ARE JOINTLY AND SEVERALLY RESPONSIBLE FOR MAINTAINING OR ASSURING THE ONGOING MAINTENANCE OF INSTALLED LANDSCAPING SO THAT THE LANDSCAPING CONTINUES TO THRIVE. PRIOR TO THE ISSUANCE OF A BUILDING PERMIT, THE OWNER, DEVELOPER OR CONTRACTOR SHALL POST A PERFORMANCE BOND OR EQUIVALENT SECURITY TO ASSURE THE PERFORMANCE OF THE MAINTENANCE OBLIGATION FOR A MINIMUM OF TWO YEARS.
6. ALL PLANTERS AREAS NOT OTHERWISE NOTED TO HAVE 3" DEEP, 3/4" GRAVEL O/BLACK POLYETHYLENE GROUND COVER, AROUND & BETWEEN PLANTS & SHRUBS. (GRAVEL COLOR TO BE SELECTED BY ARCHITECT)
7. ALL TREES SHALL HAVE A GROWTH HEIGHT OF 40' OR HIGHER W/ 20 FOOT SPREAD MIN. ALL TREES TO BE STAKED FOR SUPPORT.
8. CONTRACTOR SHALL REMOVE ALL ROCKS, WEEDS, DEBRIS & ALL EXTRANEOUS MATERIAL FROM JOB SITE PRIOR TO PROCEEDING WITH ANY LANDSCAPE WORK AND DISPOSE OF IN A SUITABLE AND LAWFUL MANNER.
9. ANY REQUIRED PLANT MATERIAL THAT DOES NOT SURVIVE, OR SUSTAINS SEVERE DAMAGE, SHALL BE REPLACED WITHIN 90 DAYS.
10. ALL PLANTING AREAS TO BE PROPERLY PREPARED AND FERTILIZED TO SUSTAIN LIFE AND GROWTH FOR SIX (6) MONTHS AFTER INSTALLATION.
11. SUPPLY AND INSTALL ALL PIPING, FITTINGS, VALVES, HEADS, TIMER, WIRING, ETC. NECESSARY TO PROVIDE A PROPER AUTOMATIC IRRIGATION SYSTEM TO ALL PLANTING AREAS ADEQUATE TO ALLOW VIGOROUS PLANT LIFE, HEALTH, AND GROWTH.
12. IRRIGATION CONTROLLER TO BE: RAINMASTER EAGLE-I (12) W/ CENTRAL COMMUNICATION KIT
13. ROOT BARRIER TO BE INSTALLED BY ANY CURB, WALL OR SIDEWALK.
14. ALL PIPES AND CONTROLLER WIRES ARE TO BE PLACED IN SLEEVING UNDER ALL HARDSCAPE AREAS

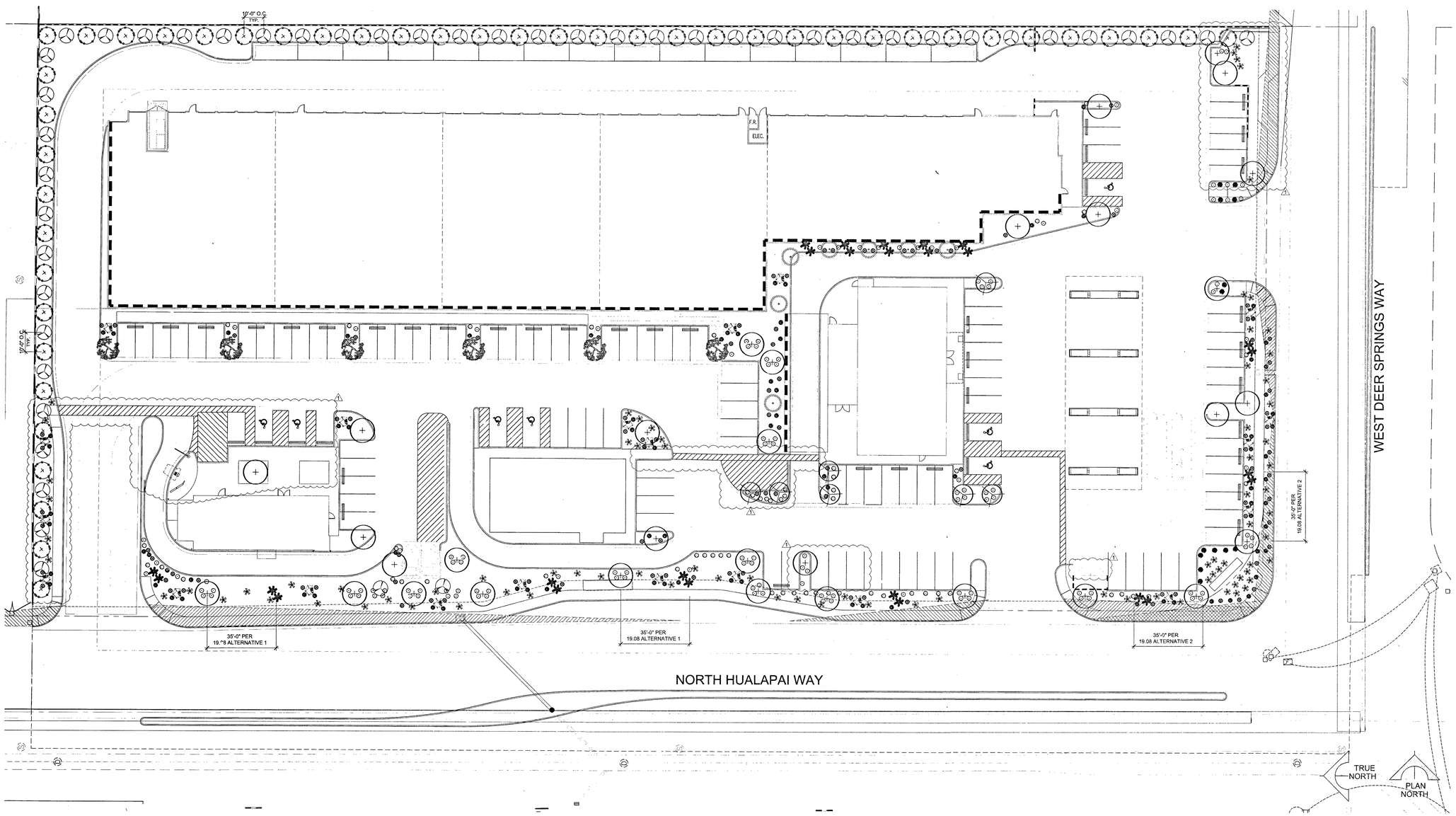

A LANDSCAPE PLAN
SCALE: 1" = 20'
SCALE 1" = 20'
0 10 20 40

100 % CONSTRUCTION DOCUMENTS - PERMIT SET

ARCHITECT OF RECORD

SHURLEY design studio
architecture + interior design

3230 SOUTH BUFFALO DR #108
EMAIL: GRAHAM@SHURLEYDESIGN.COM
PHONE: 702.921.0102

CLIENT

These drawings and specifications are instruments of service and remain the property of Shurley Design Studio, LLC. Copies of drawings and specifications received by the client may be official only for the project for which they are prepared, and not for construction of any other project. These plans are not to be reproduced, changed or copied in any form or manner whatsoever, nor are they to be assigned to any third party, without first obtaining the expressed written permission and consent of the design professional. Written dimensions on these drawings shall have precedence over scaled dimensions.
©copyright 2017, Shurley Design Studio, LLC

JOHN JOSEPH CARROLL JR. REGISTERED No.7512 ARCHITECT STATE OF NEVADA

05.01.2017

STORAGEONE
W DEER SPRINGS WAY & N HUALAPAI WAY
LAS VEGAS, NEVADA

Delta #	Issue Date	Description
1	04/13/17	PlnChk Comments

Project No.	2017001
Date:	April 6, 2017
Drawn:	J.Carroll
Reviewed:	J.Carroll/G.Shurley

Drawing Title:
LANDSCAPE PLAN

LANDSCAPE PLAN

16

Sheet No.:
AS2.1

10745060 L-69418

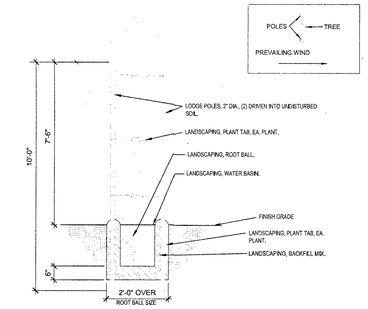

A | TREE STAKING LAYOUT

SCALE: NOT TO SCALE

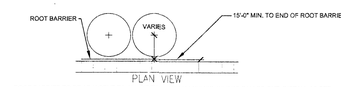

ROOT BARRIER TO BE ADJACENT TO ALL SIDEWALKS AND CURBS, WHERE CALLED OUT. INSTALL AS PER MANUFACTURERS SPECIFICATIONS.

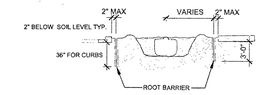

B | ROOT BARRIER DETAIL

SCALE: NOT TO SCALE

100 % CONSTRUCTION DOCUMENTS - PERMIT SET

ARCHITECT OF RECORD

SHURLEY
design studio
architecture • interior design
9210 NORTH MAIN LAS VEGAS, NV 89030
EMAIL: DESIGN@SHURLEYDESIGN.COM
PHONE: 702.521.0122

CLIENT

These drawings and specifications are instruments of service and remain the property of Shurley Design Studio, LLC. Copies of drawings and specifications retained by the client may be utilized only for the project for which they are prepared, and not for construction of any other project. These plans are not to be reproduced, changed or copied in any form or manner whatsoever, nor are they to be assigned to any third party, without first obtaining the expressed written permission and consent of the design professional. Written dimensions on these drawings shall have precedence over scaled dimensions.
©copyright 2017, Shurley Design Studio, LLC

JOHN JOSEPH CARROLL JR. REGISTERED No.7512 ARCHITECT STATE OF NEVADA

05.01.2017

STORAGEONE
W DEER SPRINGS WAY & N HUALAPAI WAY
LAS VEGAS, NEVADA

Delta #	Issue Date	Description

Project No.	2017001
Date:	April 6, 2017
Drawn:	J.Carroll
Reviewed:	J.Carroll/G.Shurley

Drawing Title:

LANDSCAPE - PLANTING DETAILS

17

Sheet No.:

AS2.2

10745060 L-69418

LANDSCAPE - PLANTING DETAILS

IRRIGATION LEGEND

SYMBOL	MANUFACTURER	MODEL NUMBER / DESCRIPTION
WM	SEE CIVIL PLANS	WATER METER
⊕	HUNTER	ICV 1" REMOTE CONTROL VALVE W/ FILTER & PRESSURE REGULATOR - TREE, SHRUB & PALM VALVE
●	AGRIFIM	DRIP FLUSH END CAP
BFP	FEBCO	825Y W/ STRAINER BACKFLOW PREVENTION ASSEMBLY
— - - —	AS APPROVED	PVC PIPE SCHEDULE 40 - SIZE ACCORDINGLY 18" BELOW GRADE, ALL MAINLINE ON PROJECT SEE SIZE ON PLAN
———	TORO	DRIP IRRIGATION WITH 3/4" BLUE STRIPE POLY PIPE TUBING AND 1/4" EMITTER TUBING - REFER TO SHRUB EMITTER CHART
==========	AS APPROVED	PROVIDE (2) PVC PIPE SCHEDULE 40 SLEEVES, MINIMUM 2" DIAMETER; (1) TO BE USED FOR THIS SCOPE OF WORK AND (1) 2" DIAMETER FOR FUTURE USE. PIPE USED FOR THIS SCOPE OF WORK SHALL BE THE DIAMETER OF PIPE OR WIRE BUNDLE CARRIED. NO SYMBOL SHOWN ON PLANS - ALL PIPES AND WIRES UNDER PAVING
———	TORO	PVC PIPE CLASS 200, AS LATERAL LINES 12" BELOW GRADE. SIZE PER PLAN
A	HUNTER	IRRIGATION SYSTEM CONTROLLER - PEDESTAL MOUNT

DRIP VALVE BOX
XXX — INDICATES CONTROLLER/ STATION NUMBER
X" — INDICATES VALVE SIZE

PIPE SIZING CHART

DIAMETER	CL 200	CL 315	SCH 40
1/2"	-	-	-
3/4"	8-11 GPM	-	5-8 GPM
1"	12-16 GPM	-	9-13 GPM
1-1/4"	17-26 GPM	-	14-24 GPM
1-1/2"	27-36 GPM	-	25-34 GPM
2"	37-57 GPM	26-39 GPM	35-50 GPM

SHRUB EMITTER CHART

SIZE	GPH	NUMBER OF EMITTERS
1 GALLON	2 GPH	1 EACH
5 GALLON	2 GPH	2 EACH
15 GALLON	2 GPH	3 EACH
24" BOX	2 GPH	4 EACH
36" BOX	2 GPH	6 EACH

IRRIGATION GENERAL NOTES:

1. THE IRRIGATION SYSTEM IS DRAWN DIAGRAMMATICALLY. WHERE POSSIBLE, LOCATE ALL IRRIGATION LINES AND APPURTENANCES.
2. INSTALL REMOVE CONTROL VALVES ADJACENT TO PAVING WHERE POSSIBLE.
3. ALL IRRIGATION LINES UNDER PAVING SHALL BE SLEEVED WITH SCHEDULE 40 PIPE MIN. 2X DIAMETER OF PIPE BEING SLEEVED TYPICAL 18" BELOW GRADE. PROVIDE GROUND MARKER TO SHOW LOCATION OF SLEEVE ENDS.
4. ALL IRRIGATION SLEEVES TO BE INSTALLED AT MINIMUM OF 6" PAST ANY KNOWN OBSTRUCTIONS BEING SLEEVED UNDER INCLUDING WALLS, FENCES, HARDSCAPES, ETC.
5. ACTUAL POC LOCATION TO BE AS DESIGNATED BY WATER DISTRICT AND OWNER'S AUTHORIZED REPRESENTATIVE.
6. SCH40 DRIP LATERALS/MANIFOLDS ARE DIAGRAMMATIC ONLY AND DENOTE GENERAL STATION LIMITS. SUBLATERALS, FLEX PVC, EMITTERS, AND OTHER DRIP EQUIPMENT ARE NOT SHOWN FOR CLARITY.
7. MAIN LINE AND LATERAL LINES SHOWN WITHIN PAVING FOR CLARITY ONLY, ACTUAL MAIN LOCATION TO BE A MINIMUM OF 18" OFF ADJACENT HARDSCAPE AND OTHER OBSTACLES (TYPICAL).
8. CONTRACTOR TO COORDINATE QUANTITY AND LOCATIONS OF IRRIGATION SYSTEM CONTROLLERS WITH OWNER/ ARCHITECT PRIOR TO CONSTRUCTION.

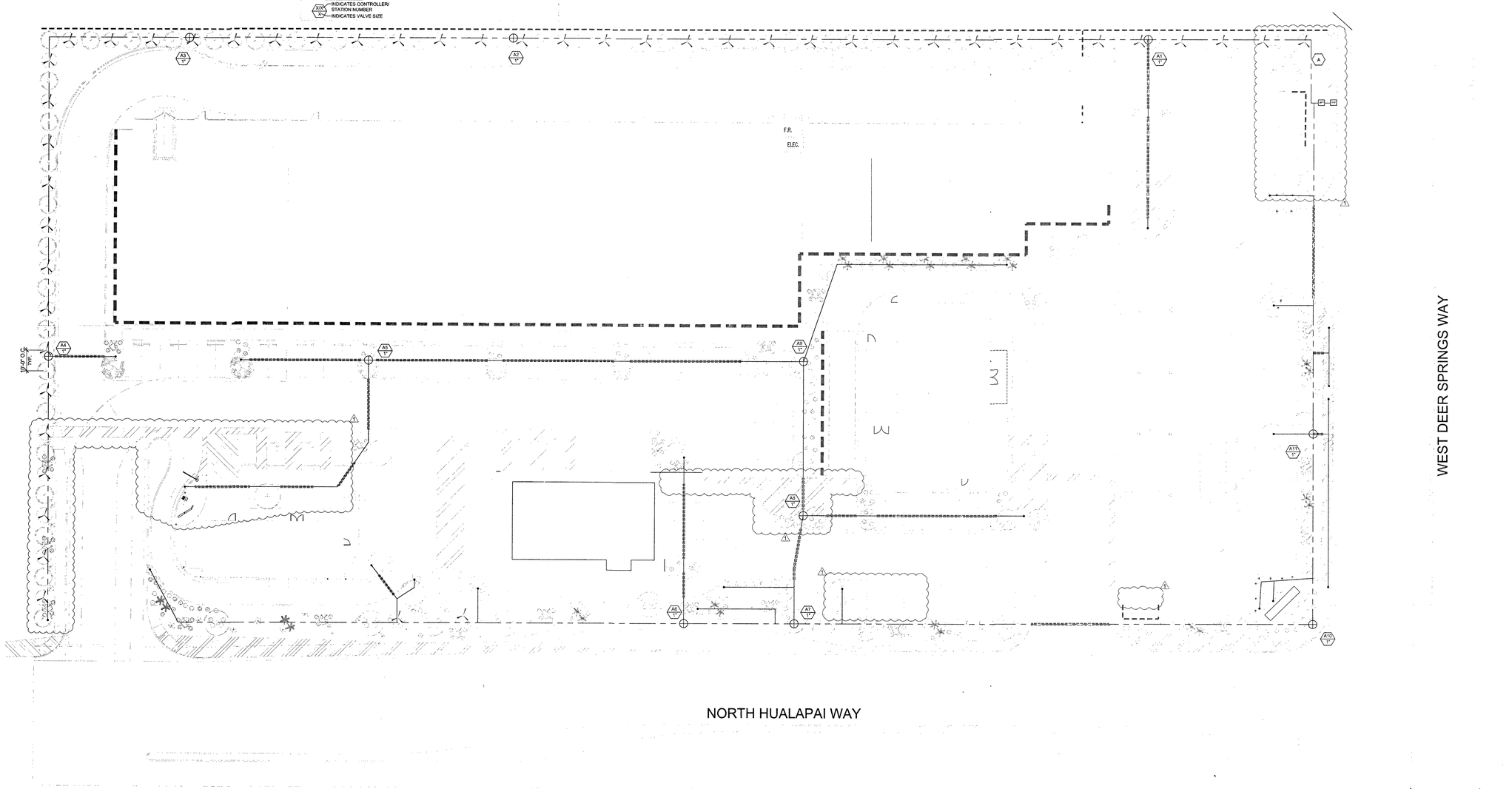

A | LANDSCAPE - IRRIGATION PLAN
SCALE: 1" = 20'
SCALE 1" = 20'
0 10 20 40

100 % CONSTRUCTION DOCUMENTS - PERMIT SET

ARCHITECT OF RECORD

SHURLEY design studio
architecture • interior design
3010 WEST CHARLESTON BLVD, #100
LAS VEGAS, NEVADA 89102
EMAIL: DESIGN@SHURLEYDESIGN.COM
PHONE: 702.821.1002

CLIENT

These drawings and specifications are instruments of service and remain the property of Shurley Design Studio, LLC. Copies of drawings and specifications received by the client may be utilized only for the project for which they are prepared, and not for construction of any other project. These plans are not to be reproduced, changed or copied in any form or manner whatsoever, nor are they to be assigned to any third party, without first obtaining the expressed written permission and consent of the design professional. Written dimensions on these drawings shall have precedence over scaled dimensions.
©copyright 2017, Shurley Design Studio, LLC

JOHN JOSEPH CARROLL JR. REGISTERED No.7512 ARCHITECT STATE OF NEVADA
05.01.2017

STORAGEONE
W DEER SPRINGS WAY & N HUALAPAI WAY
LAS VEGAS, NEVADA

Delta #	Issue Date	Description
1	04/13/17	PlnChk Comments

LANDSCAPE - IRRIGATION PLAN

Project No.	2017001
Date:	April 6, 2017
Drawn:	J.Carroll
Reviewed:	J.Carroll/G.Shurley

Drawing Title:
LANDSCAPE - IRRIGATION PLAN

Sheet No.: 18
AS2.3
10745060 L-69418

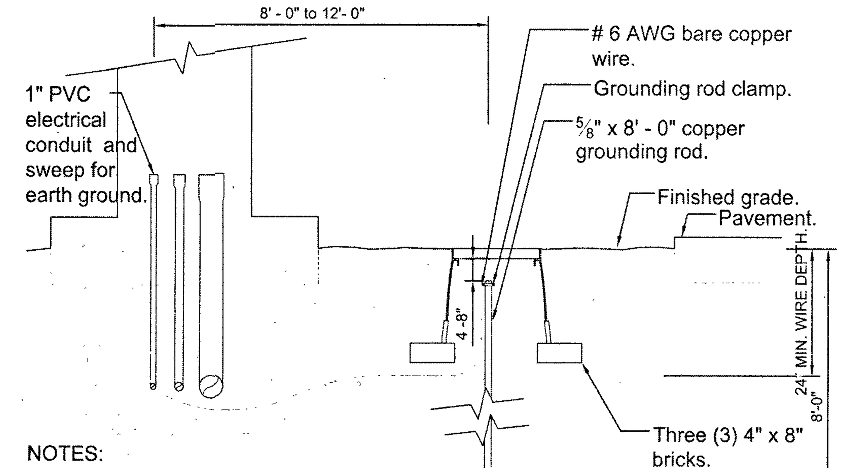

NOTES:
1- ALL GROUNDING REQUIREMENTS FOR CONTROLLERS SHALL CONFORM TO LOCAL ELECTRIC CODES.
2- GROUNDING ROD SHALL NOT BE LOCATED IN THE SAME TRENCH AS THE IRRIGATION MAINLINES OR LATERAL LINES.
3- VALVE BOX SHALL BE WRAPPED WITH A MINIMUM 3 MIL THICK PLASTIC AND SECURED TO THE VALVE BOX USING DUCT TAPE OR ELECTRICAL TAPE.
4- INSTALL GROUNDING ROD PER THE CONTROLLER MANUFACTURER'S SPECIFICATIONS AND RECOMMENDATIONS.

8 | GROUNDING ROD DETAIL
SCALE: NONE

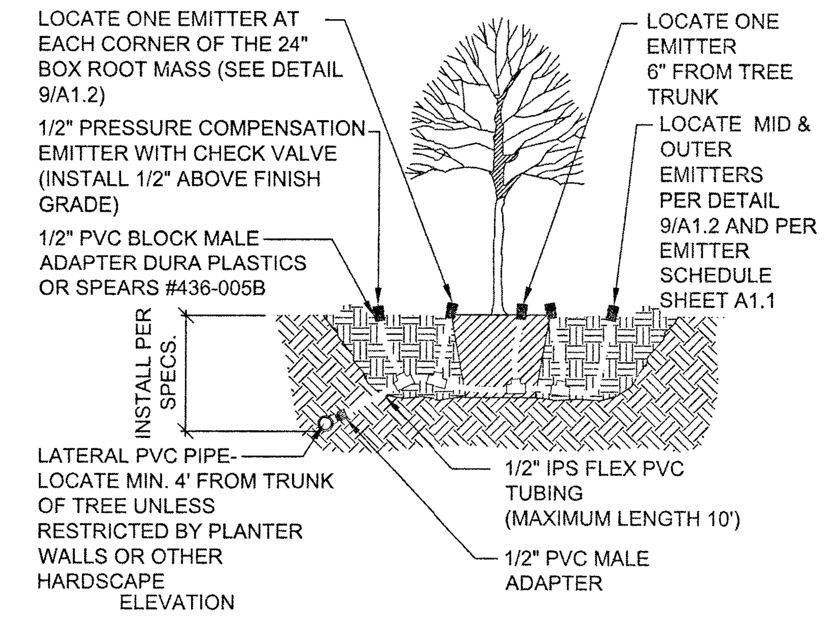

4 | TREE EMITTER LAYOUT
SCALE: NONE

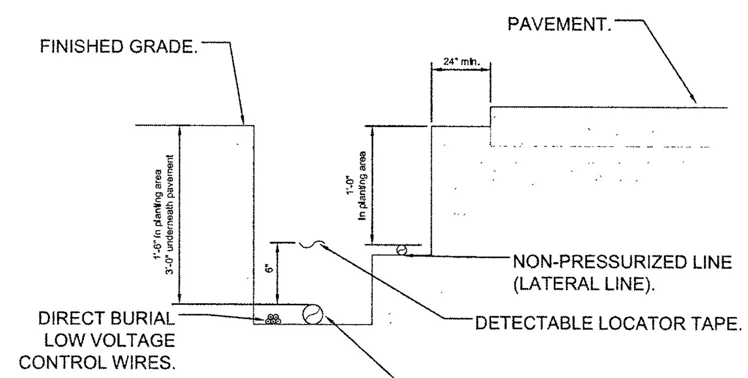

NOTES:
1- SEE IRRIGATION LEGEND FOR MAINLINE AND LATERAL LINE PIPE SIZE AND TYPE.
2- DIRECT BURIAL CONTROL WIRES SHALL BE INSTALLED IN SCH. 40 PVC ELECTRICAL CONDUIT IF REQUIRED.
3- 2-WIRE IRRIGATION WIRE SHALL BE INSTALLED IN SCH. 40 PVC ELECTRICAL CONDUIT.
4- DETECTABLE LOCATOR TAPE SHALL BE LOCATED SIX INCHES (6") ABOVE THE ENTIRE MAINLINE RUN.

11 | IRRIGATION TRENCHING
SCALE: NONE

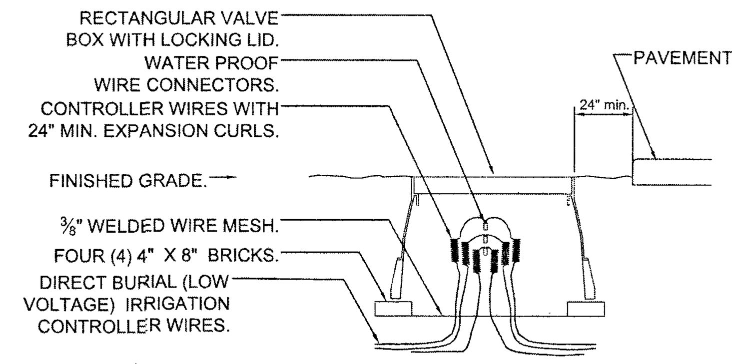

NOTE:
1- VALVE BOXES SHALL BE LOCATED IN PLANTING AREAS.
2- SPLICES SHALL ONLY BE MADE AT ELECTRICAL PULL BOXES.
3- LOW VOLTAGE WIRES UNDER ROADWAYS MUST BE IN CONTINUOUS CONDUIT WITH 90° SCH. 40 PVC SWEEPS TERMINATING IN PULL BOXES.
4- ALL WIRE CONNECTIONS SHALL BE MADE USING DBR/Y-6 CONNECTORS OR APPROVED EQUAL.

7 | ELECTRICAL PULL BOX
SCALE: NONE

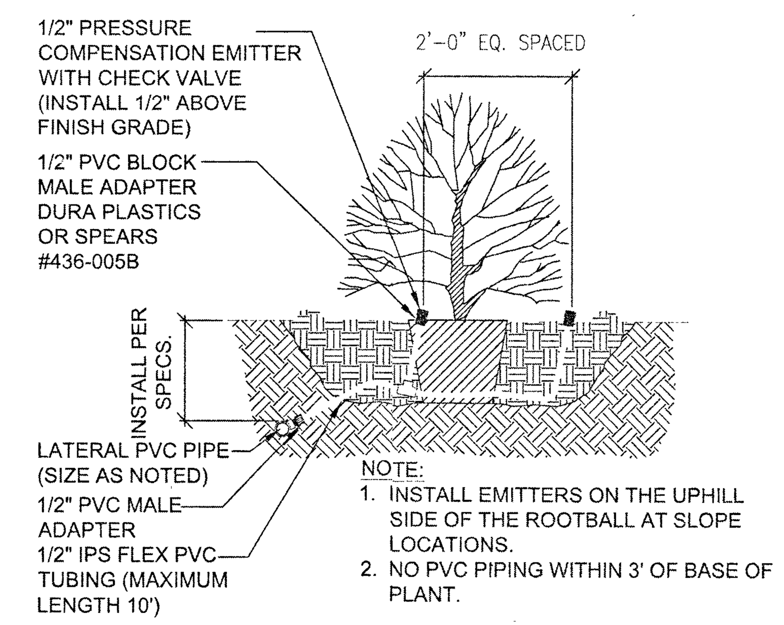

NOTE:
1. INSTALL EMITTERS ON THE UPHILL SIDE OF THE ROOTBALL AT SLOPE LOCATIONS.
2. NO PVC PIPING WITHIN 3' OF BASE OF PLANT.

3 | PLANT EMITTER LAYOUT
SCALE: NONE

MINIMUM BEARING SURFACE AREA

PIPE SIZE	TEE AND PLUG	90° BEND	45° BEND
1-1/2"	0.45 FEET ²	0.63 FEET ²	0.34 FEET ²
2"	0.69 FEET ²	0.97 FEET ²	0.53 FEET ²
2-1/2"	1.0 FEET ²	1.41 FEET ²	0.77 FEET ²
3"	1.48 FEET ²	2.10 FEET ²	1.14 FEET ²
4"	2.43 FEET ²	3.45 FEET ²	1.87 FEET ²
6"	5.25 FEET ²	7.41 FEET ²	4.02 FEET ²
8"	9.08 FEET ²	12.83 FEET ²	6.96 FEET ²
10"	14.93 FEET ²	21.07 FEET ²	11.44 FEET ²

NOTES:
1- SIZE THRUST BLOCKS SHALL BE SPECIFIED AS SHOW IN THE TABLE ABOVE.
2- CONTROL WIRES SHALL NOT BE ENCASED IN CONCRETE.
3- ALL FITTINGS SHALL BE WRAPPED WITH POLYETHYLENE TO PREVENT CONCRETE FROM ADHERING TO PIPE, FITTINGS OR BOLTS.
4- JOINTS AND BOLTS SHALL BE ACCESSIBLE FOR REPAIRS.
5- THRUST BLOCKS SHALL BE A MINIMUM OF 6" THICK.
6- ONE 80 LBS. SACK OF CONCRETE SHALL COVER .6 FT.³

10 | THRUST BLOCK DETAILS
SCALE: NONE

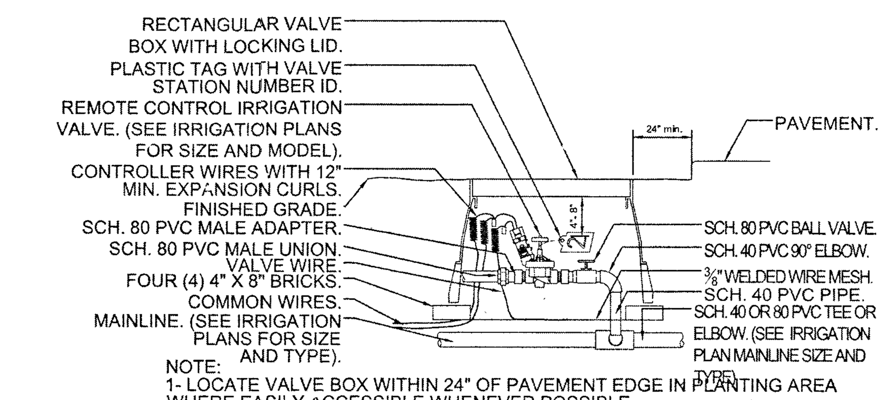

NOTE:
1- LOCATE VALVE BOX WITHIN 24" OF PAVEMENT EDGE IN PLANTING AREA WHERE EASILY ACCESSIBLE WHENEVER POSSIBLE.
2- COMMON WIRE AND CONTROLLER WIRE SHALL BE DIRECT BURIAL 14 AWG OR LARGER. COLOR: COMMON (WHITE), CONTROLLER WIRE FOR TURF (BLUE), AND CONTROLLER WIRE FOR SHRUBS (RED). (SEE SPECIFICATIONS FOR 2-WIRE CONTROLLERS).
3- ALL WIRE RUNS SHALL BE CONTINUOUS WITHOUT ANY SPLICES UNLESS APPROVED BY THE OWNER'S REPRESENTATIVE. SEE SPLICE BOX DETAIL. WIRE CONNECTIONS SHALL BE MADE USING DBR/Y-6 CONNECTORS OR APPROVED EQUAL.
4-VALVE BOX SHALL BE WRAPPED WITH MIN. 3 MIL THICK PLASTIC AND SECURE IT USING DUCT TAPE OR ELECTRICAL TAPE.
5- MAINLINES 4" OR LARGER SHALL USE SADDLES AT THE CONNECTIONS POINTS TO THE IRRIGATION VALVE. (SEE SPECIFICATIONS FOR IRRIGATIONS SADDLES).
6- ALL SCH. 80 PVC TO SCH. 40 PVC THREADED CONNECTIONS SHALL BE MADE USING TEFLON TAPE.
7- VALVE BOXES SHALL BE LOCATED IN PLANTING AREAS.

6 | REMOTE CONTROL IRR. VALVE
SCALE: NONE

NOTES:
1. FLUSH ALL PIPING PRIOR TO INSTALLING VALVE.
2. COMPACT SOILS AROUND VALVE BOX TO 80% OF ORIGINAL DRY DENSITY.
3. FITTING AND NIPPLES TO BE SAME SIZE AS RCV.
4. INSTALL GEOFABRIC UNDER VALVE BOXES AND TAPE TO PIPE NIPPLES AND VALVE BOX.
5. ALL WIRE TO BE INSTALLED & SUPPLIED AS PER LOCAL CODE.
6. BOX COLOR - TAN IN D.G. AREA.
7. SCH. 40 PVC MAIN LINE USE PVC SCH. 40 TEE SST.
8. ON OUTLET OF MAIN LINE FITTING USE A PVC SCH. 80 NIPPLE TOE AND A PVC SCH. 80 COUPLING SS TO ADAPT TO SCH. 80 PIPE.
9. A MIN. OF 3" CLEARANCE ABOVE & BELOW ANY VALVES &/OR FILTERS.
10. INSTALL IN A JUMBO IRRIGATION VALVE BOX, USE EXT. IF NEEDED.

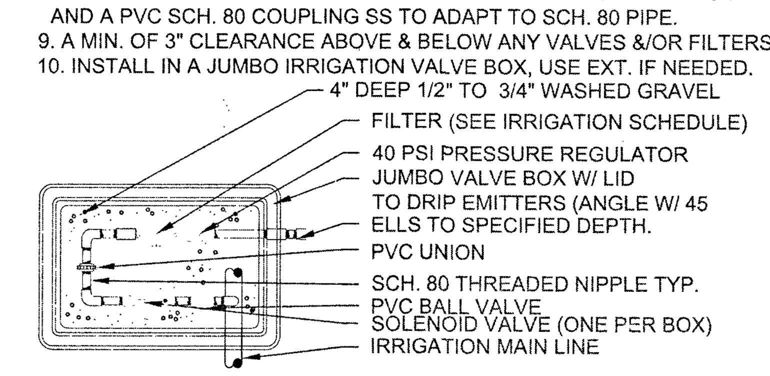

2 | DRIP CONTROL DETAIL
SCALE: NONE

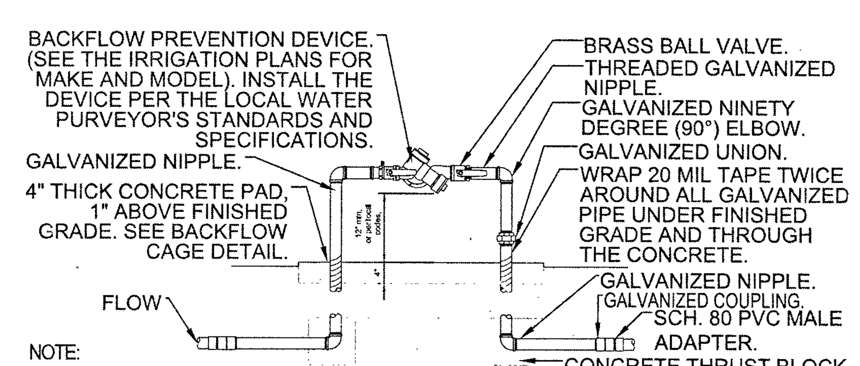

NOTE:
1- ALL ASSEMBLY PARTS (THREADED NIPPLES, FITTINGS, ETC.) SHALL BE GALVANIZED OR BRASS PER LOCAL CODES AND REQUIREMENTS.
2- GALVANIZED NIPPLE SHALL EXTEND 12" PAST THE EDGE OF THE CONCRETE FOOTING.
3- SCH. 80 OR40 PVC MALE ADAPTER SHALL BE USED IN CONNECTION FROM GALVANIZE TO THE MAINLINE.
4- BACKFLOW PREVENTION DEVICE SHALL BE LOCATED AS CLOSE AS POSSIBLE TO THE LANDSCAPE METER.
5- BACKFLOW PREVENTION DEVICE SHALL BE LOCATED IN PLANTING AREA UNLESS APPROVED BY OWNER'S REPRESENTATIVE.
6- SEE DETAIL FOR BACKFLOW CAGE INSTALLATION.
7- ALL BACKFLOW PREVENTION DEVICES SHALL HAVE FREEZE BLANKET INCLUDED UPON INSTALLATION.
8- ALL GALVANIZED CONNECTIONS SHALL TO BE MADE USING PIPE THREAD SEALANT. ALL SCH. 40 OR 80 PVC TO GALVANIZED CONNECTIONS TO BE MADE USING TEFLON TAPE.

8 | BACKFLOW PREVENTION DEVICE
SCALE: NONE

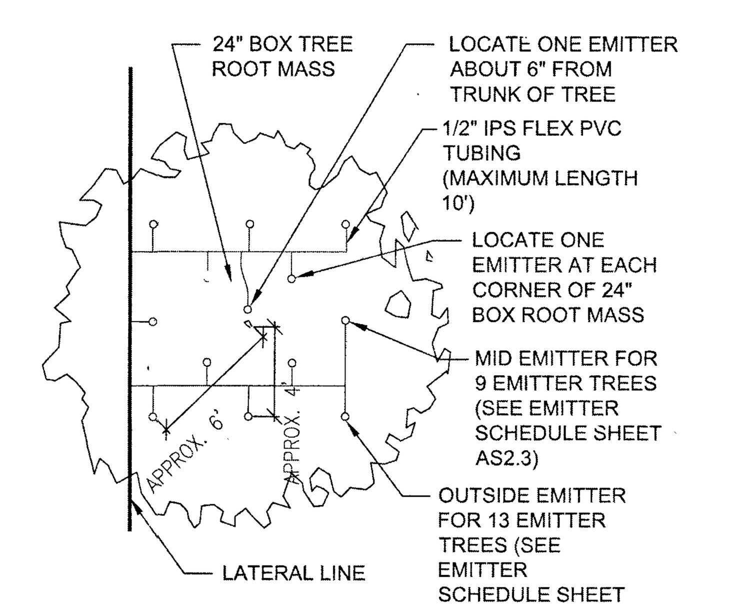

5 | TREE EMITTER LAYOUT
SCALE: NONE

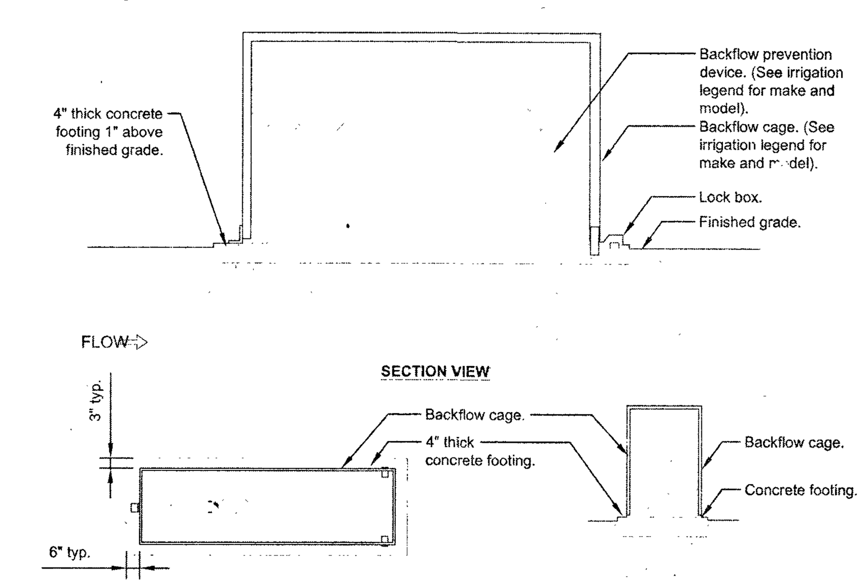

Notes:
1- Install backflow cage per manufacturer's specifications and recommendations.
2- See backflow prevention device detail for reference.
2- Lock box shall be located above concrete footing
3- Contractor shall provide a lock as approved by the Owner's Representative.

1 | BACKFLOW CAGE
SCALE: NONE

100 % CONSTRUCTION DOCUMENTS - PERMIT SET

ARCHITECT OF RECORD

SHURLEY design studio
architecture + interior design
EMAIL: GERALD@SHURLEYDESIGN.COM
PHONE: 702.624.0022

CLIENT

These drawings and specifications are instruments of service and remain the property of Shurley Design Studio, LLC. Copies of drawings and specifications retained by the client may be utilized only for the project for which they are prepared, and not for construction of any other project. These plans are not to be reproduced, changed or copied in any form or manner whatsoever, nor are they to be assigned to any third party, without first obtaining the expressed written permission and consent of the design professional. Written dimensions on these drawings shall take precedence over scaled dimensions.
©copyright 2017, Shurley Design Studio, LLC

JOHN JOSEPH CARROLL JR. REGISTERED ARCHITECT No.7512 STATE OF NEVADA
05.01.2017

STORAGEONE
W DEER SPRINGS WAY & N HUALAPAI WAY
LAS VEGAS, NEVADA

Delta #	Issue Date	Description

Project No.	2017001
Date:	April 6, 2017
Drawn:	J.Carroll
Reviewed:	J.Carroll/G.Shurley

Drawing Title:
IRRIGATION DETAILS

IRRIGATION DETAILS

19

Sheet No.:
AS2.4
107Y5060 L-69418

SOUTHWEST GAS CORPORATION

C DEER SPRINGS HUALAPAI
CITY OF LAS VEGAS, NV
WR #3376796

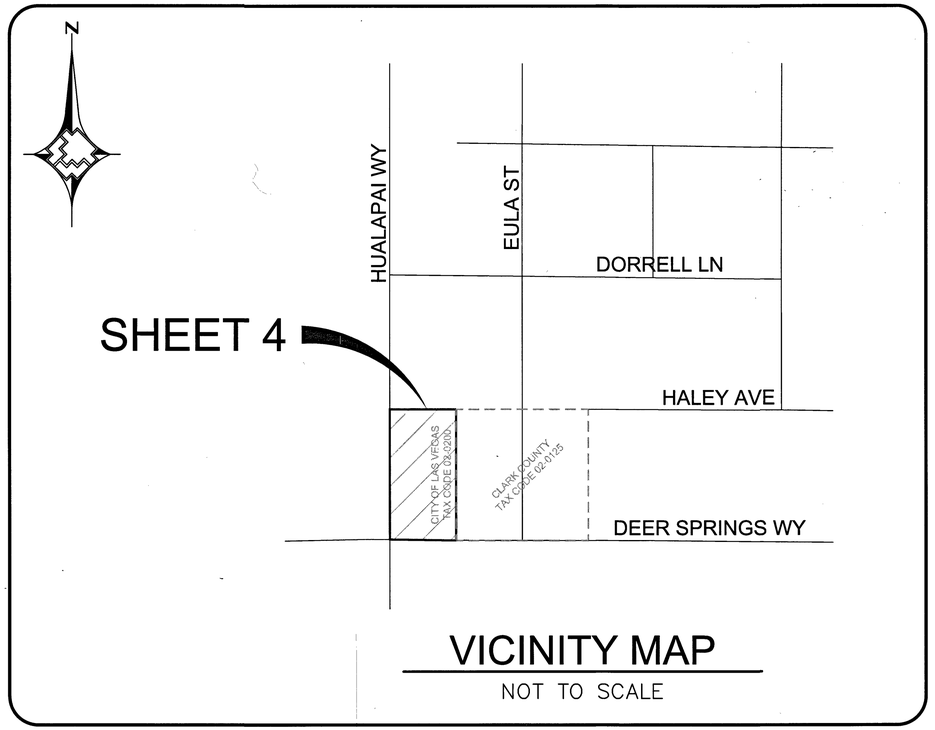

VICINITY MAP

NOT TO SCALE

LEGEND

- EXISTING GAS LINE
- GAS LINE TO BE ABANDONED
- EXISTING GAS SERVICE
- PROPOSED MAIN GAS LINE (NEW)
- PROPOSED SERVICE LATERAL (NEW)
- PROPOSED SERVICE LINE (NEW)
- RIGHT OF WAY LINE
- STREET CENTERLINE
- PROPERTY LINE
- BACK OF CURB
- TAX CODE BOUNDARY
- MATCHLINE
- PAVEMENT CUT AND REPAIR
- EXISTING ANODELESS RISER
- EXISTING ANODE RISER
- EXISTING GAS LIGHT
- EXISTING GAS VALVE
- STL (1) PE (1) PROPOSED MAIN CALL OUT
- (1) ABANDONED FACILITIES CALL OUT
- (2) GAS DIMENSIONS
- EXCESS FLOW VALVE

SHEET INDEX

1. COVER SHEET
2. ABBREVIATIONS & NOTES
3. MATERIALS & SIGNATURES - PE
4. DESIGN PLAN
5. TYPICAL SWPPP BMPs DETAILS

811 Know what's **below.** **Call** before you dig.

NO.	DESCRIPTION	BY	DATE	APPVD.
1.				
2.				
3.				
4.				

REVISIONS

SOUTHWEST GAS CORPORATION

TAX CODES	UNIT NO.	UNIT TYPE	INSTL. (PROPOSED)	RETIRED (PROPOSED)	INSTL. (COMPLETED)	RETIRED (COMPLETED)

PROPERTY UNITS

AS-BUILT DRAWING-PRESSURE TEST DATA

SEE SHEET 3

PIPE DIA. _____ TEST MEDIUM: ☐ AIR ☐ NITROGEN ☐ WATER ☑ SOAP
TEST METHOD: ☐ GAUGE ☐ CHART ☐ GAUGE/PRESS REC SN# _____
PIPE LENGTH _____
PIPE TYPE _____
MIN. DURATION _____
TEST PRES. (PSIG): (MAX) _____ (MIN) _____
TIME: (START) _____ (STOP) _____
DATE: (START) _____ (STOP) _____
PERFORMED BY: _____
SWG VERIFIED BY: _____

INDIVIDUAL PERFORMING VISUAL INSPECTION
VISUAL INSPECTION CERTIFICATION

SEE SHEET 3

I HAVE VISUALLY INSPECTED ALL HEATED FUSIONS, SOLVENT CEMENT, MECHANICAL JOINTS, AND WELDS THAT I HAVE PERFORMED

NAME _____ DATE _____

AS-BUILTS ACCEPTED BY _____ DATE _____
POSTED BY _____ DATE _____
POSTING QC'D BY _____ DATE _____

CONSTRUCTION

SEE SHEET 3

INSPECTOR _____
FOREMAN _____
REVIEWED BY _____

PERMIT INFORMATION
CITY OF LAS VEGAS
TAX CODE: 02-0200

ISOLATION AREA	W.R. NO.
DIST_328	3376796

LOCATION	ATLAS #/TILE #
SEC 19 T19S R60E M.D.M.	x579y558

ENGINEER/TECH: KAELAN TANIGAWA		PHONE: 702-365-2291
ACCOUNT REP: GARTH BRETON		PHONE: 702-365-2038
PROJECT CONTACT: DAVE WAGNER		PHONE: 702-376-0526
SHEET NO: 1 OF 5	SCALE: NTS	DATE: 01/24/2018
DWN. BY: BC&F	CHKD. BY:	APPVD. BY:

TITLE

C DEER SPRINGS HUALAPAI
COVER SHEET

10745060 L-69418

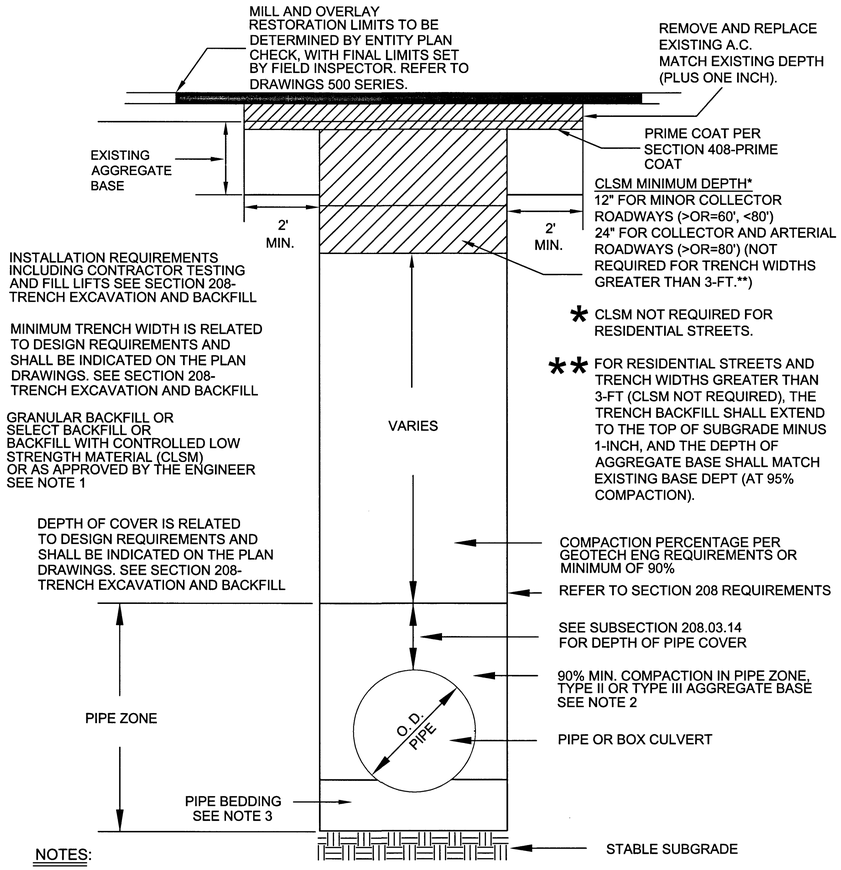

NOTES:

1. NO STONES OR LUMPS GREATER THAN 3" PERMITTED IN TRENCH 2' OR LESS IN WIDTH.
2. TRENCH WIDTH, BEDDING, SUBGRADE AND PIPE ZONE REQUIREMENTS FOR UTILITY INSTALLATIONS SHALL CONFORM TO THE RESPECTIVE ENTITY REQUIREMENTS.
3. CRUSHED ROCK MAY BE USED FOR PIPE BEDDING ONLY IF MATERIAL USE HAS BEEN SPECIFICALLY APPROVED BY THE GOVERNING AGENCY. SEE STANDARD DRAWING NO. 505 FOR PIPE BEDDING METHODS.
4. LAS VEGAS VALLEY WATER DISTRICT REQUIRES PIPE BEDDING AND BACKFILL WITHIN THE PIPE ZONE TO BE OF THE SAME MATERIAL.

RTC STD DWG 503

Know what's **below.** **Call** before you dig.

ABBREVIATIONS

AB	ABANDONED
AC	ASPHALTIC CONCRETE
ACP	ASBESTOS CEMENT PIPE
AIM	AREA ISOLATION MODULE
BLVD	BOULEVARD
BM	BENCHMARK
BMI	BLACK MOUNTAIN INDUSTRIAL
BO	BLOW OFF
BTU	BRITISH THERMAL UNIT
BWC	BASIC WATER COMPANY
COBC	CITY OF BOULDER CITY
CC	CLARK COUNTY
CCAUSD	CLARK COUNTY AREA UNIFORM STANDARD DRAWING
CCRFCD	CLARK COUNTY REGIONAL FLOOD CONTROL DISTRICT
CCWRD	CLARK COUNTY WATER RECLAMATION DISTRICT
CIP	CAST IRON PIPE
CL	CENTERLINE
CLV	CITY OF LAS VEGAS
CNLV	CITY OF NORTH LAS VEGAS
COH	CITY OF HENDERSON
CP	CATHODIC PROTECTION
DET	DETAIL
DI	DUCTILE IRON
DIA	DIAMETER
DIMP	DISTRIBUTION INTEGRITY MANAGEMENT PROGRAM
DNR	DOES NOT REGISTER
DWG	DRAWING
EG	EXISTING GROUND
EHDD	EFFECTIVE HEATING DEGREE DAY
ELEC	ELECTRICAL
ELEV	ELEVATION
EMRS	ELECTRONIC MAPPING RECORDS SYSTEM
EPR	ELECTRONIC PRESSURE RECORDERS
ESMT	EASEMENT
EX	EXISTING
FERC	FEDERAL ENERGY REGULATORY COMMISSION
FOS	FACILITY OUT OF SERVICE
FH	FIRE HYDRANT
GIR	GAS INFRASTRUCTURE REPLACEMENT
GPR	GAS PRESSURE REGULATOR
HCA	HIGH CONSEQUENCE AREA
HDD	HEATING DEGREE DAY
HDPE	HIGH DENSITY POLYETHYLENE PIPE
HP	HIGH PRESSURE
HERS	HOME ENERGY RATING SYSTEM
HOP	HISTORIC OPERATING PROCEDURE
HVTT	HIGH VOLUME TAPPING TEE
ID	INSIDE DIAMETER
IN	INCH(ES)
IPS	IRON PIPE SIZE
IS	IDENTIFIED SITE
JT	JOINT TRENCH
KRG	KERN RIVER GAS COMPANY
LDCPE	LARGE DIAMETER COILED POLYETHYLENE PIPE
LVVWD	LAS VEGAS VALLEY WATER DISTRICT
MAOP	MAXIMUM ALLOWABLE OPERATING PRESSURE
MCFH	THOUSAND CUBIC FEET PER HOUR
MH	MANHOLE
MOP	MAXIMUM OPERATING PRESSURE
MSA	METER SET ASSEMBLY
MVP	MAPPING VERIFICATION PROCEDURE
NAP	NOT A PART
NDOT	NEVADA DEPARTMENT OF TRANSPORTATION
NTSB	NATIONAL TRANSPORTATION SAFETY BOARD
NTS	NOT TO SCALE
OC	ON CENTER
OD	OUTSIDE DIAMETER
OH	OVERHEAD
OHP	OVERHEAD POWER
P	POWER
PAOP	POTENTIAL ALLOWABLE OPERATING PRESSURE
PCC	PORTLAND CEMENT CONCRETE
PE	POLYETHYLENE PIPE
PH	POT HOLE
PHMSA	PIPELINE & HAZARDOUS MATERIALS SAFETY ADMINISTRATION
PL	PROPERTY LINE
PIC	POTENTIAL IMPACT CIRCLE
PLS	PRESSURE LIMITING STATION
PP	POWER POLE
PQF	PREQUALIFIED FITTING
PVC	POLYVINYL CHLORIDE
RAM	RISK ASSESSMENT MODEL
RC	REINFORCED CONCRETE
RCP	REINFORCED CONCRETE PIPE
SD	STORM DRAIN
SDMH	STORM DRAIN MANHOLE
SDR	STANDARD DIMENSION RATIO
SF	SQUARE FOOT
SHT	SHEET
SHP	STEEL HIGH PRESSURE PIPE
SMYS	SPECIFIED MAXIMUM YIELD STRENGTH
SNWA	SOUTHERN NEVADA WATER AUTHORITY
SS	SANITARY SEWER
SST	STAINLESS STEEL
ST	STREET
STA	STATION
STD	STRENGTH TEST DRAWING
STL	STEEL
SWG	SOUTHWEST GAS
TEL	TELEPHONE
TB	THRUST BLOCK
TOP	TOP OF PIPE
TP	TEST POINT
TRIMP	TRANSMISSION INTEGRITY MANAGEMENT PROGRAM
UDACS	UNIFORM DESIGN AND CONSTRUCTION STANDARDS
UOC	UNUSUAL OPERATING CONDITIONS
UOP	UNIT OF PROPERTY
UPRR	UNION PACIFIC RAILROAD
USD	UNIFORM STANDARD DRAWING
VCP	VITRIFIED CLAY PIPE
VERT	VERTICAL
VG	VALLEY GUTTER
VSP	VINTAGE STEEL PIPE
W	WATER
WMS	WORK MANAGEMENT SYSTEM
WR	WORK REQUEST
WT	WALL THICKNESS
WV	WATER VALVE
YD	YARD(S)

CONSTRUCTION NOTES

1. SUGGESTED GAS LOCATIONS ARE TO CLEAR SUBSTRUCTURES LOCATE IN FIELD.
2. ALL PIPELINE CONSTRUCTION SHALL CONFORM TO APPLICABLE JURISDICTION SPECIFICATIONS.
3. DO NOT SCALE THIS DRAWING.
4. CHANGE IN PROPOSED MAIN LOCATION MUST BE AUTHORIZED BY SWG ENGINEER PRIOR TO INSTALLATION.
5. GAS MAINS SHALL BE PURGED PER OPERATIONS MANUAL.
6. ALL EXISTING UTILITY LOCATION TO BE VERIFIED PRIOR TO START OF CONSTRUCTION.
7. CONTACT ENGINEERING FOR BYPASS INFORMATION.
8. ALL MAIN TIE-INS REQUIRING TEES ARE TO BE FULL-FLOW TEES UNLESS OTHERWISE STATED.
9. ALL SHORING REQUIREMENTS SHALL CONFORM TO APPLICABLE PORTIONS OF THE OPERATIONS MANUAL.
10. REQUEST FOR SURVEYING AND/OR STAKING WILL BE SUBMITTED TO ENGINEERING 72 HOURS IN ADVANCE, MINIMUM.
11. TRENCHING AND BACKFILL TO CONFORM WITH RTC STANDARD 503, 500.5 AND STANDARD SPECIFICATIONS 208.
12. MAINTAIN MINIMUM 12" VERTICAL SEPARATION AT ALL POINTS OF CROSSING.
13. MAINTAIN A MINIMUM 3' PARALLEL SEPARATION.
14. ANY EXCAVATION EXPOSING LVVWD FACILITIES 24" IN DIAMETER AND LARGER MUST REMAIN OPEN UNTIL INSPECTED BY LVVWD. NO BACKFILL MATERIAL IS TO BE PLACED IN THE EXCAVATION UNTIL APPROVED BY THE LVVWD INSPECTOR. ANY DAMAGE TO THE FACILITIES MUST BE REPORTED TO LVVWD IMMEDIATELY. CONTRACTOR TO CALL (702) 258-7171 TO SCHEDULE LVVWD INSPECTION.

RTC NOTES:

PAVEMENT REPAIR SHALL CONFORM TO RTC:

A1 500.5

A2 503

NO.	DESCRIPTION	BY	DATE	APPVD.
1.				
2.				
3.				
4.				

REVISIONS

SOUTHWEST GAS CORPORATION

TAX CODES	UNIT NO.	UNIT TYPE	INSTL.	RETIRED	INSTL.	RETIRED
			PROPOSED		COMPLETED	

PROPERTY UNITS

SEE SHEET 3

AS-BUILT DRAWING-PRESSURE TEST DATA

PIPE DIA. _____ TEST MEDIUM: ☐ AIR ☐ NITROGEN ☐ WATER ☐ SOAP — TEST METHOD: ☐ GAUGE ☐ CHART — GAUGE/ PRESS REC SN# _____

PIPE LENGTH _____

PIPE TYPE _____

MIN. DURATION _____

TEST PRES. (PSIG): (MAX) _____ (MIN) _____

TIME: (START) _____ (STOP) _____

DATE: (START) _____ (STOP) _____

PERFORMED BY: _____

SWG VERIFIED BY: _____

INDIVIDUAL PERFORMING VISUAL INSPECTION
VISUAL INSPECTION CERTIFICATION
I HAVE VISUALLY INSPECTED ALL HEATED FUSIONS, SOLVENT CEMENT, MECHANICAL JOINTS, AND WELDS THAT I HAVE PERFORMED

NAME _____ DATE _____

AS-BUILTS ACCEPTED BY _____ DATE _____

POSTED BY _____ DATE _____

POSTING QC'D BY _____ DATE _____

CONSTRUCTION

INSPECTOR _____

FOREMAN _____

REVIEWED BY _____

PERMIT INFORMATION

CITY OF LAS VEGAS
TAX CODE: 02-0200

ISOLATION AREA	W.R. NO.
DIST_328	3376796
LOCATION	ATLAS #/TILE #
SEC 19 T19S R60E M.D.M.	x579y558

ENGINEER/TECH: KAELAN TANIGAWA	PHONE: 702-365-2291
ACCOUNT REP: GARTH BRETON	PHONE: 702-365-2038
PROJECT CONTACT: DAVE WAGNER	PHONE: 702-376-0526
SHEET NO: 2 OF 5 / SCALE: NTS	DATE: 01/24/2018
DWN. BY: BC&F / CHKD. BY:	APPVD. BY:

TITLE

C DEER SPRINGS HUALAPAI ABBREVIATIONS AND NOTES

10725060 L-69418

MATERIAL LIST FOR DISTRIBUTION FACILITIES				
ITEM#	QTY. (DESIGN)	QTY. (AS-BUILT)	STOCK ID#	DESCRIPTION
1	1		160-8174	4" X 2" HVTT
2	449'		100-5101	2" PE MAIN
3	364'		100-5101	2" PE SVC
4	5		140-3067	2" PE 90° ELBOW
5	3		140-3074	2" PE TEE
6	4		160-9271	2" EFV (5,500)
7	2		161-7661	2" PE RISER, 600 CFH, 7" WC, 2' SPREAD
8	1		161-7661	2" PE RISER, 1,000 CFH, 7" WC, 2' SPREAD
9	1		161-7661	2" PE RISER, 500 CFH, 7" WC, 2' SPREAD

CATHODIC PROTECTION NOTES:

1. NO STEEL WITHIN PROJECT LIMITS. NO CP ACTION REQUIRED.

VISUAL INSPECTION (OQ/PJQ)

SIGNATURE _____

DATE _____

PURGE PLAN WAS COMPLETED IN ACCORDANCE WITH THE OPERATIONS MANUAL GUIDELINES BY:

PRINT: _____ DATE: _____

SIGNATURE: _____

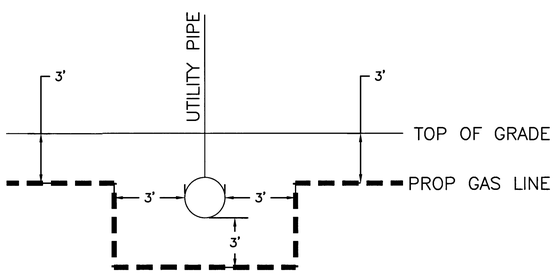

TYPICAL UTILITY CROSSING DETAIL

NOT TO SCALE

SYSTEM D_N_VALLEY_W

DR. NO. 21DS10009738

SEGMENT M.A.O.P. N/A

SYSTEM M.A.O.P. 60 psig

SYSTEM M.O.P. 55 psig

AS-BUILT DRAWING-PRESSURE TEST DATA

TEST MEDIUM: ☐ AIR ☐ NITROGEN ☐ WATER ☐ SOAP

TEST METHOD: ☐ GAUGE ☐ CHART ☐ GAUGE/ PRESS REC SN#

PIPE DIA. _____

PIPE LENGTH _____

PIPE TYPE _____

MIN. DURATION _____ START _____ END _____

TEST PRES. (PSIG) _____ _____

TIME _____ _____

DATE _____ _____

PERFORMED BY _____

Know what's **below.** **Call** before you dig.

NO.	DESCRIPTION	BY	DATE	APPVD.
1.				
2.				
3.				
4.				

REVISIONS

SOUTHWEST GAS CORPORATION

TAX CODES	UNIT NO.	UNIT TYPE	INSTL. (PROPOSED)	RETIRED (PROPOSED)	INSTL. (COMPLETED)	RETIRED (COMPLETED)
	3760102	2" PE	449'			
	3800102	2" PE	364'			

PROPERTY UNITS

AS-BUILT DRAWING-PRESSURE TEST DATA

TEST MEDIUM: ☐ AIR ☐ NITROGEN ☐ WATER ☐ SOAP

TEST METHOD: ☐ GAUGE ☐ CHART ☐ GAUGE/ PRESS REC SN#

PIPE DIA. _____

PIPE LENGTH _____

PIPE TYPE _____

MIN. DURATION _____

TEST PRES. (PSIG): (MAX) _____ (MIN) _____

TIME: (START) _____ (STOP) _____

DATE: (START) _____ (STOP) _____

PERFORMED BY: _____

SWG VERIFIED BY: _____

INDIVIDUAL PERFORMING VISUAL INSPECTION
VISUAL INSPECTION CERTIFICATION

I HAVE VISUALLY INSPECTED ALL HEATED FUSIONS, SOLVENT CEMENT, MECHANICAL JOINTS, AND WELDS THAT I HAVE PERFORMED

NAME _____ DATE _____

AS-BUILTS ACCEPTED BY _____ DATE _____

POSTED BY _____ DATE _____

POSTING QC'D BY _____ DATE _____

CONSTRUCTION

INSPECTOR _____

FOREMAN _____

REVIEWED BY _____

PERMIT INFORMATION

CITY OF LAS VEGAS
TAX CODE: 02-0200

ISOLATION AREA	W.R. NO.
DIST_328	3376796
LOCATION	ATLAS #/TILE #
SEC 19 T19S R60E M.D.M.	x579y558

ENGINEER/TECH: KAELAN TANIGAWA — PHONE: 702-365-2291

ACCOUNT REP: GARTH BRETON — PHONE: 702-365-2038

PROJECT CONTACT: DAVE WAGNER — PHONE: 702-376-0526

SHEET NO: 3 OF 5 — SCALE: NTS — DATE: 01/24/2018

DWN. BY: BC&F — CHKD. BY: — APPVD. BY:

TITLE

C DEER SPRINGS HUALAPAI MATERIALS AND SIGNATURES - PE

10785060 L-69418

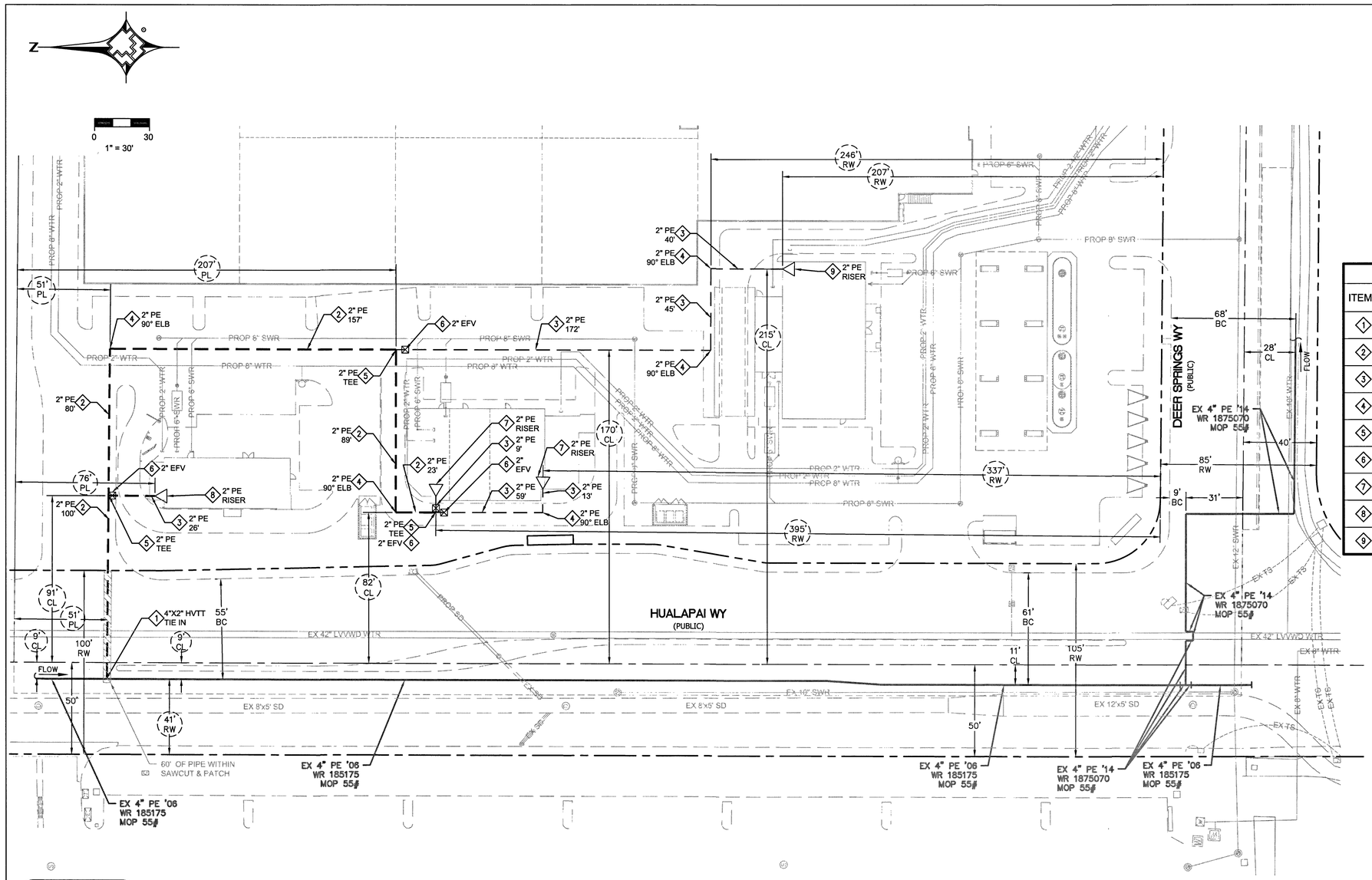

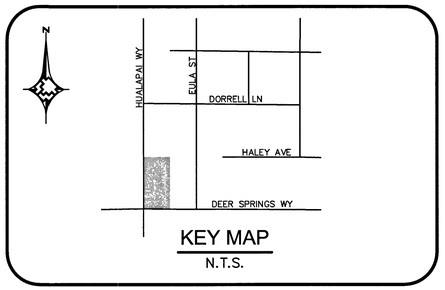

KEY MAP
N.T.S.

MATERIAL LIST FOR DISTRIBUTION FACILITIES

ITEM#	QTY. (AS-BUILT)	STOCK ID#	DESCRIPTION
1		160-8174	4" X 2" HVTT
2		100-5101	2" PE MAIN
3		100-5101	2" PE SVC
4		140-3067	2" PE 90° ELBOW
5		140-3074	2" PE TEE
6		160-9271	2" EFV (5,500)
7		161-7661	2" PE RISER, 600 CFH, 7" WC, 2' SPREAD
8		161-7661	2" PE RISER, 1,000 CFH, 7" WC, 2' SPREAD
9		161-7661	2" PE RISER, 500 CFH, 7" WC, 2' SPREAD

RTC NOTES:

PAVEMENT REPAIR SHALL CONFORM TO RTC:

A1 500.5

A2 503

Know what's **below.** **Call** before you dig.

NO.	DESCRIPTION	BY	DATE	APPVD.
1.				
2.				
3.				
4.				

REVISIONS

SOUTHWEST GAS CORPORATION

TAX CODES	UNIT NO.	UNIT TYPE	INSTL. (PROPOSED)	RETIRED (PROPOSED)	INSTL. (COMPLETED)	RETIRED (COMPLETED)

PROPERTY UNITS

SEE SHEET 3

AS-BUILT DRAWING-PRESSURE TEST DATA

PIPE DIA. _____ TEST MEDIUM: ☐ AIR ☐ NITROGEN ☐ WATER ☑ SOAP

TEST METHOD: ☐ GAUGE ☐ CHART

PIPE LENGTH _____

PIPE TYPE _____ GAUGE/ PRESS REC SN#

MIN. DURATION _____

TEST PRES. (PSIG): (MAX) _____ (MIN) _____

TIME: (START) _____ (STOP) _____

DATE: (START) _____ (STOP) _____

PERFORMED BY: _____

SWG VERIFIED BY: _____

INDIVIDUAL PERFORMING VISUAL INSPECTION

VISUAL INSPECTION CERTIFICATION

I HAVE VISUALLY INSPECTED ALL HEATED FUSIONS, SOLVENT CEMENT, MECHANICAL JOINTS, AND WELDS THAT I HAVE PERFORMED

NAME _____ DATE _____

AS-BUILTS ACCEPTED BY _____ DATE _____

POSTED BY _____ DATE _____

POSTING QC'D BY _____ DATE _____

CONSTRUCTION

INSPECTOR _____

FOREMAN _____

REVIEWED BY _____

PERMIT INFORMATION

CITY OF LAS VEGAS

TAX CODE: 02-0200

ISOLATION AREA	W.R. NO.
DIST_328	3376796
LOCATION	ATLAS #/TILE #
SEC 19 T19S R60E M.D.M.	x579y558

ENGINEER/TECH: KAELAN TANIGAWA		PHONE: 702-365-2291
ACCOUNT REP: GARTH BRETON		PHONE: 702-365-2038
PROJECT CONTACT: DAVE WAGNER		PHONE: 702-376-0526
SHEET NO: 4 OF 5	SCALE: 1"=30'	DATE: 01/24/2018
DWN. BY: BC&F	CHKD. BY:	APPVD. BY:

TITLE

C DEER SPRINGS HUALAPAI DESIGN PLAN

10745060 L-69418

TYPICAL SWPPP BMPs DETAILS

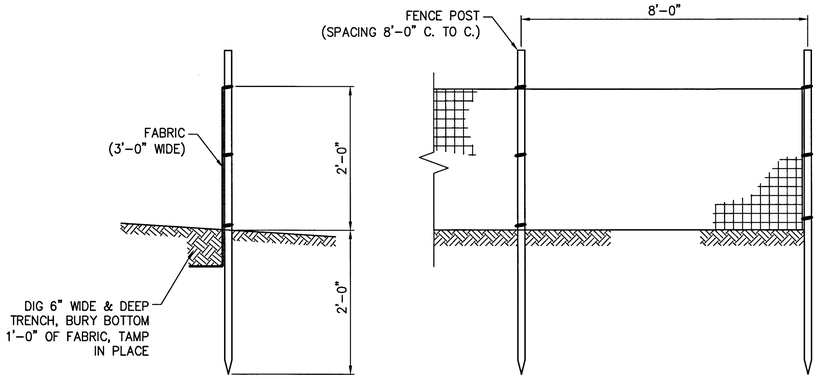

1/5 **SILT FENCE**
NOT TO SCALE

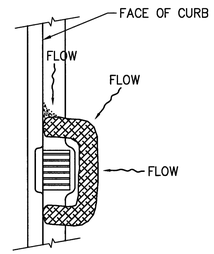

2/5 **FIBER ROLL**
NOT TO SCALE

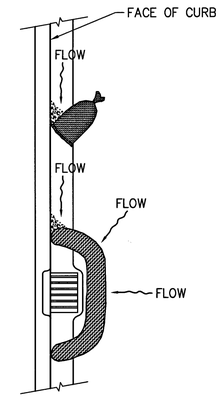

3/5 **SAND BAG / ROLL**
NOT TO SCALE

STORMWATER NOTES

1. SOUTHWEST GAS CORPORATION, IT'S CONTRACTOR, AND/OR THEIR AUTHORIZED AGENTS SHALL INSTALL ONE OF THE APPROPRIATE BMPs FOR THE PROTECTION OF EXISTING STORM DRAIN INLETS, WITHIN OR SIGNIFICANTLY NEAR ANY IMPROVED RIGHT-OF-WAY, FROM DEBRIS AND SEDIMENT RESULTING FROM CONSTRUCTION OF NATURAL GAS FACILITIES.
2. SOUTHWEST GAS CORPORATION, IT'S CONTRACTOR, AND/OR THEIR AUTHORIZED AGENTS SHALL EACH DAY REMOVE ALL SEDIMENT, MUD, CONSTRUCTION DEBRIS, OR OTHER POTENTIAL POLLUTANTS THAT MAY HAVE BEEN DISCHARGED TO, OR ACCUMULATED IN, THE PUBLIC RIGHTS OF WAY OF CLARK COUNTY AS A RESULT OF CONSTRUCTION ACTIVITIES ASSOCIATED WITH THIS SITE DEVELOPMENT OR CONSTRUCTION PROJECT. SUCH MATERIALS SHALL BE PREVENTED FROM ENTERING THE STORM SEWER SYSTEM, USING BEST MANAGEMENT PRACTICES DETAILED ON THIS SHEET.
3. ADDITIONAL CONSTRUCTION SITE DISCHARGE BEST MANAGEMENT PRACTICES MAY BE REQUIRED OF SOUTHWEST GAS CORPORATION, IT'S CONTRACTOR, AND/OR THEIR AUTHORIZED AGENTS DUE TO UNFORESEEN EROSION PROBLEMS OR IF THE LISTED BMPs ON THIS SHEET DO NOT MEET THE PERFORMANCE STANDARDS SPECIFIED IN THE CLARK COUNTY CODE - CHAPTER 24.40/STORM SEWER SYSTEM DISCHARGE AND THE LAS VEGAS VALLEY CONSTRUCTION SITE BMP GUIDANCE MANUAL.
4. ACCUMULATED SEDIMENT IN BMPs SHALL BE REMOVED WITHIN SEVEN DAYS AFTER A STORMWATER RUNOFF EVENT OR PRIOR TO THE NEXT ANTICIPATED STORM EVENT, WHICHEVER IS EARLIER. SEDIMENT MUST BE REMOVED WHEN BMP DESIGN CAPACITY HAS BEEN REDUCED BY 50 PERCENT OR MORE.

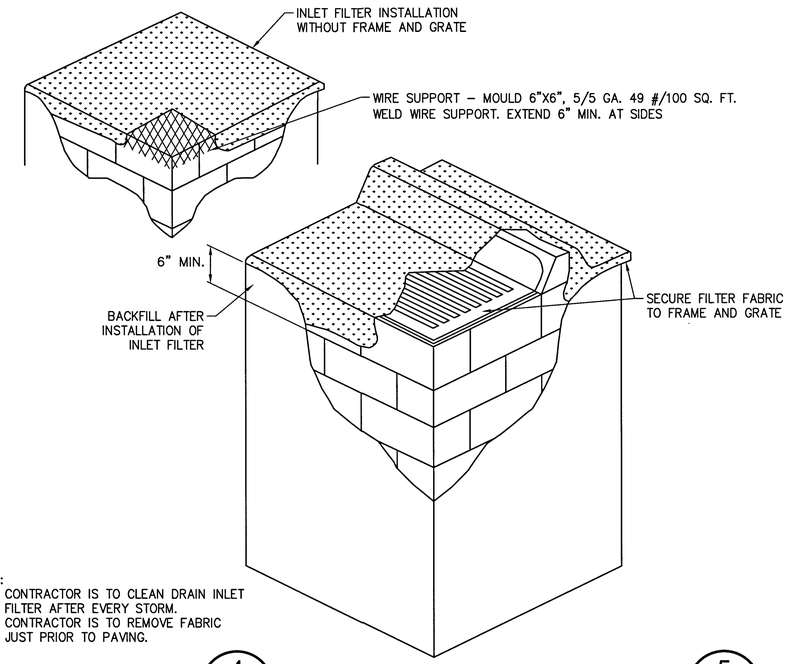

NOTE:
1. CONTRACTOR IS TO CLEAN DRAIN INLET FILTER AFTER EVERY STORM.
2. CONTRACTOR IS TO REMOVE FABRIC JUST PRIOR TO PAVING.

4/5 **DRAIN INLET FILTER**
NOT TO SCALE

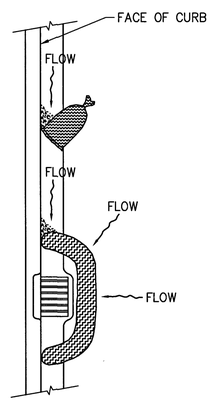

5/5 **GRAVEL BAG / ROLL**
NOT TO SCALE

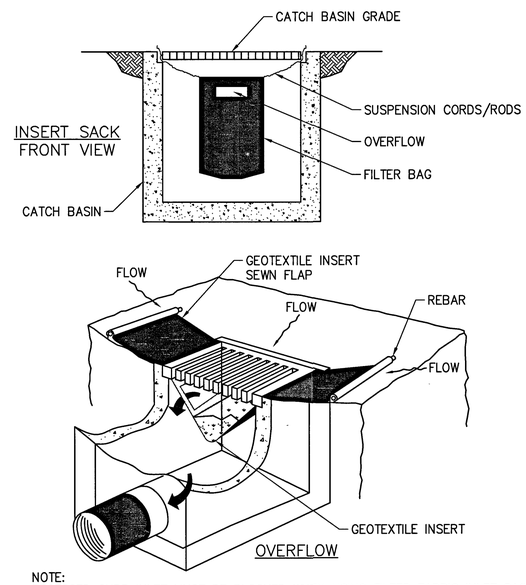

NOTE:
RECESSED CURB INLET MUST BE BLOCKED WHEN USING FILTER FABRIC INLET SACKS.
SIZE OF FILTER FABRIC INLET SACK TO BE DETERMINED BY MANUFACTURER.

6/5 **SEDIMENT FILTER BAG**
NOT TO SCALE

Know what's **below.** **Call** before you dig.

NO.	DESCRIPTION	BY	DATE	APPVD.
1.				
2.				
3.				
4.				

REVISIONS

SOUTHWEST GAS CORPORATION

TAX CODES	UNIT NO.	UNIT TYPE	INSTL.	RETIRED	INSTL.	RETIRED
			PROPOSED		COMPLETED	

PROPERTY UNITS

SEE SHEET 3

AS-BUILT DRAWING-PRESSURE TEST DATA

PIPE DIA. ____ TEST MEDIUM: ☐ AIR ☐ NITROGEN ☐ WATER ☐ SOAP — TEST METHOD: ☐ GAUGE ☐ CHART
PIPE LENGTH ____
PIPE TYPE ____ GAUGE/ PRESS REC SN#
MIN. DURATION ____
TEST PRES. (PSIG): (MAX) ____ (MIN) ____
TIME: (START) ____ (STOP) ____
DATE: (START) ____ (STOP) ____
PERFORMED BY: ____
SWG VERIFIED BY: ____

INDIVIDUAL PERFORMING VISUAL INSPECTION
VISUAL INSPECTION CERTIFICATION
I HAVE VISUALLY INSPECTED ALL HEATED FUSIONS, SOLVENT CEMENT, MECHANICAL JOINTS, AND WELDS THAT I HAVE PERFORMED
NAME ____ DATE ____

AS-BUILTS ACCEPTED BY ____ DATE ____
POSTED BY ____ DATE ____
POSTING QC'D BY ____ DATE ____

CONSTRUCTION
INSPECTOR ____
FOREMAN ____
REVIEWED BY ____

PERMIT INFORMATION
CITY OF LAS VEGAS
TAX CODE: 02-0200

ISOLATION AREA	W.R. NO.
DIST_328	3376796
LOCATION	ATLAS #/TILE #
SEC 19 T19S R60E M.D.M.	x579y558

ENGINEER/TECH: KAELAN TANIGAWA		PHONE: 702-365-2291
ACCOUNT REP: GARTH BRETON		PHONE: 702-365-2038
PROJECT CONTACT: DAVE WAGNER		PHONE: 702-376-0526
SHEET NO: 5 OF 5	SCALE: NTS	DATE: 01/24/2018
DWN. BY: BC&F	CHKD. BY:	APPVD. BY:

TITLE
C DEER SPRINGS HUALAPAI
TYPICAL SWPPP BMPs DETAILS

10725060 L-69418