LEGEND

- PROPOSED UTILITIES
- EXISTING UTILITIES
- FUTURE UTILITIES
- SECTION LINE
- EASEMENT LINE
- RIGHT-OF-WAY LINE
- PROPERTY LINE
- CENTERLINE
- 100 YR HYDRAULIC GRADE LINE
- PROPOSED SEWER LINE W/MH
- 16" SS — EXISTING SEWER LINE W/MH
- 4" W — EXISTING WATER LINE & GATE VALVE
- 2" G — EXISTING GAS LINE
- 2-6" E — EXISTING UNDERGROUND ELECTRICAL
- CATV — EXISTING CABLE TV
- EXISTING TELEPHONE
- OHP — EXISTING OVERHEAD AND POWER POLES
- TD 6"x6" SD — EXISTING STORM DRAIN
- 8"x8" SD — FUTURE STORM DRAIN
- EXISTING SIDEWALK AND RAMP
- VIEW FENCE
- NEW ABANDONED PIPE
- EXISTING ABANDONMENT
- SAWCUT
- CONCRETE ENCASEMENT
- ASPHALT, CURB AND GUTTER REMOVAL
- STUB & PLUG PIPE
- EDGE OF PAVEMENT
- RETAINING WALL
- EX. WATER VALVE

- 1 / CD1 — DRAWING NUMBER FOR DETAIL W/ REF. TO THE SHEET WHERE IT IS SHOWN
- EXISTING DROP INLET
- PROPOSED DROP INLET
- EXISTING GATE VALVE
- EXISTING POWER POLE
- EXISTING ELEC MARKER
- EXISTING TRAFFIC SIGNAL
- EXISTING FIRE HYDRANT
- EXISTING UTILITY BOX
- EXISTING METER BOX
- 3005 — PROPOSED CONTOUR
- (3005) — EXISTING CONTOUR
- 60.50 TC — SPOT ELEVATION
- (60.50) TC — EXISTING SPOT ELEVATION
- 1.00% — SLOPE
- EXISTING STREET LIGHT (STLT)
- TOP SLOPE / TOE SLOPE — 3:1 SLOPE UNLESS OTHERWISE NOTED ON PLAN
- SITE VISIBILITY ZONE

ABBREVIATIONS

A	AIR	FH	FIRE HYDRANT	R, RAD	RADIAL, RADIUS
AC	ASPHALT CONCRETE, ACRE	FL	FLOW LINE	RT	RIGHT
ACP	ASBESTOS CEMENT PIPE	FO	FIBER OPTIC	RCB	REINFORCED CONCRETE BOX
ADD'L	ADDITIONAL	FRP	FIBERGLASS REINFORCED PLASTIC	RCP	REINFORCED CONCRETE PIPE
AP	ANGLE POINT	FS	FINISH SURFACE	RD	ROAD
APN	ASSESSOR'S PARCEL NUMBER	FT	FOOT/FEET	RDWY	ROADWAY
APPROX	APPROXIMATELY	FTG	FOOTING	REC	RECTANGULAR
AASHTO	AMERICAN ASSOCIATION OF STATE HIGHWAY AND TRANSPORTATION OFFICIALS	FUT	FUTURE	REF	REFERENCE
		G	GAS	REINF	REINFORCED
		GA	GAGE, GUY ANCHOR	REQD	REQUIRED
ASTM	AMERICAN SOCIETY FOR TESTING AND MATERIALS	GB	GRADE BREAK	RIM	TOP OF RIM ELEVATION
		GND	GROUND	RND	ROUND
AVE	AVENUE	GRD	GRADE, GROUND	ROW,R/W	RIGHT OF WAY
AVAR	AIR VALVE, AIR RELEASE ASSEMBLY	H, HGT	HEIGHT	RP	RADIUS POINT
		HDWL	HEADWALL	RPM	RAISED PAVEMENT MARKERS
AWWA	AMERICAN WATER WORKS ASSOCIATION	HGL	HYDRAULIC GRADE LINE	RSGV	RESILIENT SEAT GATE VALVE
		HORIZ	HORIZONTAL	S	SEWER, SOUTH
BC	BACK OF CURB	HP	HIGH POINT, HIGH PRESSURE	SCH	SCHEDULE
BCR	BEGIN CURB RETURN	HPS	HIGH PRESSURE SODIUM	SD	STORM DRAIN
BLM	BUREAU OF LAND MANAGEMENT	IBC	INTERNATIONAL BUILDING CODE	SDMH	STORM DRAIN MANHOLE
BLVD	BOULEVARD	INV	INVERT	SECT	SECTION
BM	BENCHMARK	INT	INTERIM	SF	SQUARE FOOT/FEET
BO	BLOW-OFF	JT	JOINT	SHLDR	SHOULDER
BVCE	BEGIN VERTICAL CURVE ELEVATION	L	LENGTH	SHT	SHEET
BVCS	BEGIN VERTICAL CURVE STATION	L, LT	LEFT	SL	STREET LIGHT
BW	BACK OF SIDEWALK	LF	LINEAR FEET	SP	SERVICE POINT
C, ℄	CENTERLINE	LIP	LIP OF GUTTER	SQ	SQUARE
C&G	CURB AND GUTTER	LN	LANE	SR	SEWER RECLAIM MAIN
CATV	UNDERGROUND CABLE TV	LP	LIGHT POLE	SS	SANITARY SEWER
CCBM	CLARK COUNTY BENCH MARK	LSCP	LANDSCAPE	SSMH	SANITARY SEWER MANHOLE
CCPW	CLARK COUNTY PUBLIC WORKS	LVWD	LAS VEGAS VALLEY WATER DISTRICT	STA	STATION
CCTV	CLOSED-CIRCUIT TELEVISION	MAX	MAXIMUM	ST	STREET
CCWRD	CLARK COUNTY WATER RECLAMATION DISTRICT	ME	MATCH EXISTING	STD	STANDARD
		MH	MANHOLE	STL	STEEL
CFS	CUBIC FEET PER SECOND	MIN	MINIMUM	STRUCT	STRUCTURE
CIP	CAPITAL IMPROVEMENTS PROJECT, CORRUGATED IRON PIPE	MLCP	MORTAR LINED AND COATED PIPE	SVZ	SIGHT VISIBILITY ZONE
		MOD	MODIFY/MODIFIED	SW	SIDEWALK
CIPM	CURED-IN-PLACE MANHOLE	MON	MONUMENT	SWG	SOUTHWEST GAS
CIPP	CURED-IN-PLACE PIPE	MPH	MILES PER HOUR	T	TELEPHONE OR TOP
CIR	CIRCLE	N	NORTH	TAN	TANGENT
CLR	CLEAR OR CLEARANCE	NDOT	NEVADA DEPARTMENT OF TRANSPORTATION	TB	TOP OF BERM
CLSM	CONTROLLED LOW STRENGTH MATERIAL			TC	TOP OF CURB
		NO	NUMBER	TCE	TEMPORARY CONSTRUCTION ESMT
CLV	CITY OF LAS VEGAS	NOSHA	STATE OF NEVADA OCCUPATIONAL SAFETY AND HEALTH ADMINISTRATION	TEL,TELE	TELEPHONE
CMP	CORRUGATED METAL PIPE			TEMP	TEMPORARY
CMU	CONCRETE MASONRY UNIT			TF	TOP OF FOOTING
CNLV	CITY OF NORTH LAS VEGAS	NPC	NEVADA POWER COMPANY	TG	TOP OF GRATE
CO	CLEANOUT	NTS	NOT TO SCALE	TMH	TOP OF MANHOLE
CONC	CONCRETE	OC	ON CENTER	TOP	TOP OF PIPE
COND	CONDUIT	OHC	OVERHEAD COX COMMUNICATION	TP	TELEPHONE POLE
CONST	CONSTRUCT OR CONSTRUCTION	OHP	OVERHEAD POWER LINE	TRANS	TRANSITION
COORD	COORDINATE	P	POWER LINE	TRW	TOP OF RETAINING WALL
COR	CORNER	PB	PULL BOX	TS	TRAFFIC SIGNAL
CPEP	CORRUGATED POLYETHELYNE PIPE	PBS	PLANTMIX BITUMINOUS SURFACE	TSW	TOP OF SIDEWALK
CT	COURT	PC	POINT OF CURVE, PRESSURE CLASS	TW	TOP OF WALL
CY	CUBIC YARD(S)			TYP,(TYP)	TYPICAL
Δ	DELTA	PCC	POINT OF COMPOUND CURVE	UDACS	UNIFORM DESIGN AND CONSTRUCTION STANDARDS FOR WATER DISTRIBUTION SYSTEMS (LATEST EDITION)
DBL	DOUBLE	PE	PROJECT ENGINEER OR POLYETHYLENE		
DCS	DESIGN AND CONSTRUCTION STANDARDS FOR WASTEWATER COLLECTION SYSTEM (LATEST EDITION)	PED	PEDESTRIAN		
		PGL	PROFILE GRADE LINE	UG	UNDERGROUND
		PH	POTHOLE	ULT	ULTIMATE
DEFL	DEFLECTION	PI	POINT OF INTERSECTION	USD	UNIFORM STD. DRAWINGS FOR PUBLIC WORKS' CONSTRUCTION OFF-SITE IMPROVEMENTS CLARK COUNTY AREA, NEVADA (LATEST EDITION)
DIA, ø	DIAMETER	PIP	PROTECT IN PLACE		
DIP	DUCTILE IRON PIPE	PIV	POST INDICATOR VALVE		
DIST	DISTANCE	R	PROPERTY LINE		
DR	DRIVE	PLCP	POLYURETHANE LINED AND COATED STEEL PIPE		
DS	DOWNSPOUT				
DTL	DETAIL	PMF	PAVEMENT MARKING FILM	UT	UNDERGROUND TELEPHONE
DW	DRIVEWAY	POB	POINT OF BEGINNING	VAR	VARIABLE/VARIES
DWG	DRAWING	POC	POINT ON CURVE	VC	VERTICAL CURVE
E	EAST	P.O.C.	POINT OF CONNECTION	VCP	VITRIFIED CLAY PIPE
ECR	END CURB RETURN	POT	POINT ON TANGENT	VERT	VERTICAL
ELE,ELEC	ELECTRICAL	PP	POWER POLE	VG	VALLEY GUTTER
ELEV	ELEVATION	PROP	PROPOSED	VOL	VOLUME
EP, EOP	EDGE OF PAVEMENT	PRC	POINT OF REVERSE CURVE	W	WATER, WEST
ESMT	EASEMENT	PRVC	POINT OF REVERSE VERTICAL CURVE	W/	WITH
EVC	END VERTICAL CURVE			WS	WATER SUPPLY
EXIST,EX	EXISTING	PSI	POUNDS PER SQUARE INCH	WT	WEIGHT
EXP	EXPANSION JOINT	PT	POINT OF TANGENCY	WTR	WATER
FC	FACE OF CURB	P.U.E.	PUBLIC UTILITY EASEMENT	XING	CROSSING
FF, FFE	FINISH FLOOR ELEVATION	PVC	POLYVINYL CHLORIDE	YD	YARD, YARD DRAIN
FG	FINISH GRADE	PVI	POINT OF VERTICAL INTERSECTION	Z	PRESSURE ZONE
		PVMT	PAVEMENT		
		PZ	PRESSURE ZONE		

PRIVATE WATER QUANTITIES

ITEMS	DESCRIPTION	QTY	PER
1	2" TEE	1	EA
2	2" GATE VALVE	1	EA
3	2"x2½" REDUCER	1	EA
4	2½" WATERLINE	171	LF
5	2½" 45° BEND	1	EA
6	6" GATE VALVE	1	EA
7"	6" WATERLINE	45	LF
8	FIRE HYDRANT	1	EA
9	10"x6" TEE	1	EA
10	1½"x2½" REDUCER	2	EA
11	2½" 90° BEND	1	EA
12	2½" TEE	2	EA

PUBLIC WATER QUANTITIES

DESCRIPTION	QTY	PER
1½" DOMESTIC WATER METER	2	EA
1½" DOMESTIC RPPA	2	EA
1½" DOMESTIC COPPER TYPE K	20	LF
1½" DOMESTIC SERVICE SADDLE + CORP STOP	2	EA

APPROVED FOR CONSTRUCTION

LAS VEGAS VALLEY WATER DISTRICT ENGINEERING SERVICES

PROJECT No. 125994 FIRST APPROVED DATE: 1/11/18

BASIS OF BEARINGS

NORTH 05°36'32" WEST BEING THE BEARING OF THE WEST LINE OF THE NORTHWEST QUARTER (NW 1/4) OF SECTION 33, TOWNSHIP 20 SOUTH, RANGE 59 EAST, M.D.M. AS SHOWN IN BOOK 148, PAGE 46 PLATS ON FILE AT THE CLARK COUNTY, NEVADA RECORDER'S OFFICE.

BENCHMARK

DESCRIPTION	NAVD 88 DATUM	NAVD 88 DATUM
CITY OF LAS VEGAS VERTICAL CONTROL POINT "D368", BEING A USC&GS DISC SET IN ROCK SOUTH OF CHARLESTON BLVD & WEST OF DEENTION BASIN. CITY OF LAS VEGAS VERTICAL CONTROL 2008 AND ADJUSTMENT (UPDATED 05/24/2010) BASED ON NORTH AMERICAN VERTICAL DATUM OF 1988 (NAVD'88).	3246.63 (FEET)	989.574 (METERS)

199

L17-01470 715-~~186~~

H: / CLV: L17-01470

ENGINEER-STATE OF NEVADA PROFESSIONAL ROY D. CLARK Exp. 12/31/2018 CIVIL No. 9354

DATE: 1/5/18

REV	DATE	DESCRIPTION	DATE	AGEN APP	DATE	GCW APP

PROJECT NO. 889-002

DESIGN:
DRAWN:
CHECK:

PLOT DATE:01-02-18
PLOT TIME: 17:15:51

GCW ENGINEERS\SURVEYORS
1555 S. RAINBOW BLVD.
LAS VEGAS, NV 89146
T: 702.804.2000
F: 702.804.2299
gcwengineering.com

F:\Projects\800\889-002\DWG\Production\PHASE-II\P2-889-002_CC1.1_COS.dwg
Daniel Lee

CA LAS VEGAS SVD, LLC

DORAL ACADEMY
RED ROCK CAMPUS HIGH SCHOOL

PROJECT DATA

DRAWING
C1.2
2 OF 13 SHTS

PROJ#:125994 AGREE#:116643 QS:137-34-NW

CITY OF LAS VEGAS SEWER NOTES

1. ALL CONSTRUCTION AND MATERIALS SHALL BE IN ACCORDANCE WITH THE LATEST EDITION OF THE DESIGN AND CONSTRUCTION STANDARDS FOR WASTEWATER COLLECTION SYSTEMS AND THE UNIFORM STANDARD SPECIFICATIONS FOR PUBLIC WORKS' CONSTRUCTION OFF-SITE IMPROVEMENTS, CLARK COUNTY AREA, NEVADA, AS AMENDED. IT WILL BE THE RESPONSIBILITY OF THE CONTRACTOR TO BE AWARE OF THE CONTENTS OF THE ABOVE SPECIFICATIONS.
2. IT SHALL BE THE CONTRACTOR'S RESPONSIBILITY TO PERFORM CONSTRUCTION AS PER PLANS. ANY ADDITIONS, DELETIONS, OR CHANGES SHALL FIRST MEET WITH THE APPROVAL OF THE CITY ENGINEER.
3. CHISEL "S" OR "G" IN CURBS WHERE SEWER OR GAS LATERALS PASS UNDER THE CURB.
4. POLYVINYL (PVC) SEWER PIPE SHALL MEET ASTM D-3034 SDR 35 SPECIFICATIONS, INSTALLED WITH SAND BEDDING AND BACKFILL OF TYPE II AGGREGATE BASE.
5. ALL MANHOLES PAVED IN STREETS EIGHTY (80') FOOT R/W AND LARGER SHALL HAVE CONCRETE COLLARS. STREETS LESS THAN EIGHTY (80') FOOT R/W WILL REQUIRE RETROFIT IF PAVING DOES NOT CONFORM TO CITY STANDARDS AT THE MANHOLE.
6. TEE SADDLES SHALL BE USED TO CONNECT SEWER LATERALS TO EXISTING MAIN LINES UP TO TWELVE INCH (12") DIAMETER. CONNECTIONS TO FIFTEEN INCH (15") OR LARGER MAINS SHALL REQUIRE SPECIAL PROCEDURES. IN LINE "Y" 'S SHALL BE USED ON LINES TWELVE INCHES (12") OR ABOVE.
7. WATER MAINS SHALL BE PROTECTED IN ACCORDANCE WITH LVVWD STANDARDS WHENEVER A SEWER MAIN CROSSES OVER A WATER MAIN OR THE SEWER IS LESS THAN EIGHTEEN INCH (18") UNDER A WATER MAIN.
8. ALL CONTRACTORS INSTALLING SEWER MAINS THAT WILL BE UNDER THE JURISDICTION OF THE CITY OF LAS VEGAS MUST BE STATE OF NEVADA CLASS "A" CONTRACTORS.
9. THE CITY OF LAS VEGAS WILL NOT ACCEPT ANY SEWER MAINS WHICH HAVE A VERTICAL DEFLECTION OF MORE THAN ONE TENTH (0.1) OF A FOOT FROM THE APPROVED CONSTRUCTION PLANS AT ANY LOCATION. SEWER MAINS FOUND TO EXCEED THIS TOLERANCE WILL HAVE TO BE REPAIRED OR REMOVED OR REPLACED TO THE SATISFACTION OF THE CITY ENGINEER PRIOR TO ACCEPTANCE BY THE CITY OF LAS VEGAS.
10. INSTALLATION OF CURVED SEWER REQUIRES THE USE OF C-900 PIPE WHICH ALLOWS FOR PIPE DEFLECTION AT THE JOINTS.

REVISED 04/15/10

FLOOD ZONE NOTE

NO PORTION OF THE SITE FALLS WITHIN A FEMA DESIGNATED SPECIAL FLOOD HAZARD AREA. SITE LOCATED ON PANEL 32003C2150E, DATED SEPTEMBER 27, 2002, AND PANEL 32003C2145F, DATED NOVEMBER 16, 2011. THIS PANEL SHOWS THAT THE PROJECT IS LOCATED WITHIN A ZONE X AND NOT LOCATED WITHIN A FEMA DESIGNATED 100-YEAR ZONE A OR SPECIAL FLOOD HAZARD AREA.

DEVIATION FROM STANDARD

NONE

LAS VEGAS VALLEY WATER DISTRICT (LVVWD) STANDARD NOTES

LVVWD PROJECT # 125994
(Revised 08/01/2017)

1. NO WORK SHALL BEGIN UNTIL THE WATER PLANS HAVE BEEN APPROVED FOR CONSTRUCTION BY THE LVVWD. FOLLOWING WATER PLAN APPROVAL, NOTICE SHALL BE GIVEN TO THE LVVWD COMMUNICATION SUPPORT CENTER (258-7171) TWO (2) WORKING DAYS PRIOR TO THE START OF CONSTRUCTION. FOR FUTURE INSPECTIONS, NOTICE MUST BE GIVEN BY 2:00 P.M. THE BUSINESS DAY PRIOR TO THE REQUESTED LVVWD INSPECTION. WHEN REQUESTING INSPECTIONS, PLEASE REFER TO THE PROJECT # IDENTIFIED ABOVE.
2. ALL WORK SHALL CONFORM TO LVVWD STANDARD PLATES, DRAWINGS, AND SPECIFICATIONS, AND TO THE 2010 EDITION OF THE UNIFORM DESIGN AND CONSTRUCTION STANDARDS FOR POTABLE WATER SYSTEMS (UDACS). THE LATEST EDITION OF UDACS SHALL SUPERSEDE ANY CONFLICTS CONTAINED IN THE APPROVED DRAWINGS AND/OR SPECIFICATIONS.
3. ALL WORK, EXCEPT AS MODIFIED BY THESE PLANS OR BY NOTE 2 ABOVE, SHALL BE DONE IN ACCORDANCE WITH THE MOST RECENT DRAFT OR EDITION OF THE UNIFORM SPECIFICATIONS FOR PUBLIC WORKS CONSTRUCTION OFFSITE IMPROVEMENT, CLARK COUNTY AREA.
4. A SINGLE PIPE MATERIAL SHALL BE USED THROUGHOUT THE PROJECT UNLESS OTHERWISE APPROVED BY THE LVVWD.
5. ALL SERVICE LATERALS TWO (2) INCHES IN DIAMETER AND SMALLER SHALL BE TYPE K COPPER TUBING WITH LVVWD APPROVED SERVICE SADDLES.
6. ALL WATER METER BOXES SHALL BE LOCATED OUTSIDE OF DRIVEWAY AREAS.
7. ALL VALVES SHALL BE LOCATED OUTSIDE OF DRIVEWAYS, VALLEY AND CURB GUTTERS.
8. ALL WATER AND STORM DRAIN OR SANITARY SEWER CROSSINGS SHALL CONFORM TO SECTION 2.22 OF THE 2010 EDITION OF THE UDACS
9. ALL WATER FACILITIES SHALL BE FILLED, DISINFECTED, PRESSURE TESTED, AND HAVE AN ACCEPTABLE PASSING HEALTH WATER SAMPLE OBTAINED PRIOR TO OPERATION AND USE.
10. THE CONTRACTOR MUST OBTAIN ALL METERS TWO (2) INCHES AND SMALLER FROM LVVWD CENTRAL STORES. TELEPHONE 258-3152 OR 258-3802, TWO (2) WORKING DAYS PRIOR TO METER PICKUP.
11. ANY INTERRUPTION OF SERVICE MUST BE PERFORMED IN ACCORDANCE WITH UDACS SECTION 3.14.01, AND APPROVED BY THE LVVWD INSPECTION DIVISION PRIOR TO SHUTDOWN. PROPER WRITTEN NOTIFICATION MUST BE GIVEN TO ALL AFFECTED CUSTOMERS.
12. ALL WATER FACILITY CONSTRUCTION MATERIALS USED MUST BE LISTED ON THE LVVWD APPROVED PRODUCTS LIST FOR NEW FACILITIES, LATEST REVISION, OR SPECIFICALLY APPROVED ON THESE PLANS BY SUBMITTING SHOP DRAWINGS..
13. TELEPHONE "CALL BEFORE YOU DIG" AT 811 OR 1-800-227-2600
14. THE INSTALLATION OF LVVWD MUNICIPAL WATER FACILITIES WITHIN ALL STREETS IS ASSUMED TO BE IN COMPLIANCE WITH THE UNIFORMED STANDARDS, INCLUDING THE PLACEMENT OF ASPHALT PAVING STREET SURFACES. ANY REPAIR WORK DONE BY THE LVVWD TO THE MUNICIPAL WATER FACILITIES WILL INCLUDE THE PLACEMENT OF AN APPROPRIATELY SIZED ASPHALT REPAIR ON THE STREET SURFACE.

    ANY DECORATIVE PAVING SURFACE WITHIN THE STREET IS THE RESPONSIBILITY OF THE OWNER'S ASSOCIATION, OR THE INDIVIDUAL PROPERTY OWNERS IF NO OWNER'S ASSOCIATION IS IN EXISTENCE, OR THE AGENCY HAVING JURISDICTION. DECORATIVE SURFACE MATERIALS PLACED WITHIN THE TEN FOOT EASEMENT ABUTTING A PUBLIC OR PRIVATE STREET, IF DISTURBED BY THE LVVWD DURING THE REPAIR OR OPERATION OF ITS FACILITIES, WILL BE REPLACED BY LVVWD WITH AN APPROPRIATELY SIZED PLAIN FINISH CONCRETE PATCH. THE LVVWD WILL NOT RESTORE, AND WILL NOT BE RESPONSIBLE FOR THE RESTORATION OF, ANY DECORATIVE PAVING SURFACE WITHIN THE STREET. THE LVVWD WILL NOT ATTEMPT TO MATCH COLOR OR FINISH OF ANY ADJACENT MATERIALS.
15. NO LEAD COMPLIANCE NOTE:
    TO COMPLY WITH THE FEDERAL SAFE DRINKING WATER ACT, ALL WATER WORKS BRASS PRODUCTS PROPOSED TO BE RELOCATED, OR INSTALLED AS NEW MUST BE INSTALLED WITH THE LEAD FREE APPROVED PRODUCT. THE OLD LEADED PRODUCT MAY NOT BE REUSED.

APPROVED FOR CONSTRUCTION
ISHAQ
LAS VEGAS VALLEY WATER DISTRICT ENGINEERING SERVICES
PROJECT No. 125994 FIRST APPROVED DATE: 1/11/18

CITY OF LAS VEGAS GRADING NOTES

1. IN THE EVENT THAT ANY UNFORESEEN CONDITIONS NOT COVERED BY THESE NOTES ARE ENCOUNTERED DURING GRADING OPERATIONS, THE OWNER/ENGINEER SHALL BE IMMEDIATELY NOTIFIED FOR DIRECTION.
2. IT SHALL BE THE RESPONSIBILITY OF THE CONTRACTOR TO PERFORM ALL NECESSARY CUTS AND FILLS WITHIN THE LIMITS OF THIS PROJECT AND THE RELATED OFF-SITE WORK, SO AS TO GENERATE THE DESIRED SUBGRADE, FINISH GRADES AND SLOPES SHOWN.
3. CONTRACTOR SHALL TAKE FULL RESPONSIBILITY FOR ALL EXCAVATION. ADEQUATE SHORING SHALL BE DESIGNED AND PROVIDED BY THE CONTRACTOR TO PREVENT UNDERMINING OF ANY ADJACENT FEATURES OR FACILITIES AND/OR CAVING OF THE EXCAVATION.
4. THE CONTRACTOR IS WARNED THAT AN EARTHWORK BALANCE WAS NOT NECESSARILY THE INTENT OF THIS PROJECT. ANY ADDITIONAL MATERIAL REQUIRED OR LEFTOVER MATERIAL FOLLOWING EARTHWORK OPERATIONS BECOMES THE RESPONSIBILITY OF THE CONTRACTOR.
5. THE GRADING CONTRACTOR IS RESPONSIBLE TO COORDINATE WITH THE OWNER TO PROVIDE FOR THE REQUIREMENTS OF THE PROJECT STORM WATER POLLUTION PREVENTION PLAN (SWPPP) AND ASSOCIATED PERMIT.
6. CONTRACTOR SHALL GRADE TO THE LINES AND ELEVATIONS SHOWN ON THE PLANS WITHIN THE FOLLOWING HORIZONTAL AND VERTICAL TOLERANCES AND DEGREES OF COMPACTION, IN THE AREAS INDICATED:

	HORIZONTAL	VERTICAL	COMPACTION
A. PAVEMENT AREA SUBGRADE	0.1'±	+0.0' TO -0.1'	SEE SOILS REPORT
B. ENGINEERED FILL	0.5'±	+0.1' TO -0.1'	SEE SOILS REPORT

COMPACTION TESTING WILL BE PERFORMED BY THE OWNER OR HIS REPRESENTATIVE. COMPACTION SHALL COMPLY WITH THE REQUIREMENTS OF THE ENGINEER.

7. ALL CUT AND FILL SLOPES SHALL BE PROTECTED UNTIL EFFECTIVE EROSION CONTROL HAS BEEN ESTABLISHED.
8. THE USE OF POTABLE WATER WITHOUT A SPECIAL PERMIT FOR BUILDING OR CONSTRUCTION PURPOSES INCLUDING CONSOLIDATION OF BACKFILL OR DUST CONTROL IS PROHIBITED. THE CONTRACTOR SHALL OBTAIN ALL NECESSARY PERMITS FOR CONSTRUCTION WATER.
9. THE CONTRACTOR SHALL MAINTAIN THE STREETS, SIDEWALKS AND ALL OTHER PUBLIC RIGHT-OF-WAY IN A CLEAN, SAFE AND USABLE CONDITION. ALL SPILLS OF SOIL, ROCK OR CONSTRUCTION DEBRIS SHALL BE PROMPTLY REMOVED FROM THE PUBLICLY OWNED PROPERTY DURING CONSTRUCTION AND UPON COMPLETION OF THE PROJECT. ALL ADJACENT PROPERTY, PRIVATE OR PUBLIC SHALL BE MAINTAINED IN A CLEAN, SAFE AND USABLE CONDITION.
10. IN THE EVENT THAT ANY TEMPORARY CONSTRUCTION ITEM IS REQUIRED THAT IS NOT SHOWN ON THESE DRAWINGS, THE OWNER AGREES TO PROVIDE AND INSTALL SUCH ITEM AT HIS OWN EXPENSE AND AT THE DIRECTION OF THE CITY ENGINEER. TEMPORARY CONSTRUCTION INCLUDES DITCHES, BERMS, ROAD SIGNS AND BARRICADES, ETC.

REVISED 4/15/10

STORMWATER RUNOFF MANAGEMENT

1. THE OWNER, SITE DEVELOPER, CONTRACTOR AND/OR THEIR AUTHORIZED AGENTS SHALL EACH DAY REMOVE ALL SEDIMENT, MUD, CONSTRUCTION DEBRIS, OR OTHER POTENTIAL POLLUTANTS THAT MAY HAVE BEEN DISCHARGED TO, OR ACCUMULATE IN, THE PUBLIC RIGHTS OF WAYS OF THE CITY OF LAS VEGAS AS A RESULT OF CONSTRUCTION ACTIVITIES ASSOCIATED WITH THIS SITE DEVELOPMENT OR CONSTRUCTION PROJECT. SUCH MATERIALS SHALL BE PREVENTED FROM ENTERING THE STORM SEWER SYSTEM.
2. ADDITIONAL CONSTRUCTION SITE DISCHARGE BEST MANAGEMENT PRACTICES MAY BE REQUIRED OF THE OWNER AND HIS OR HER AGENTS DUE TO UNFORESEEN EROSION PROBLEMS OR IF THE SUBMITTED PLAN DOES NOT MEET THE PERFORMANCE STANDARDS SPECIFIED IN THE CITY OF LAS VEGAS AND THE LAS VEGAS VALLEY CONSTRUCTION SITE BEST MANAGEMENT PRACTICES MANUAL.
3. TEMPORARY OR PERMANENT STABILIZATION PRACTICES WILL BE INSTALLED ON DISTURBED AREAS AS SOON AS PRACTICABLE AND NO LATER THAN 14 DAYS AFTER THE CONSTRUCTION ACTIVITY IN THAT PORTION OF THE SITE HAS TEMPORARILY OR PERMANENTLY CEASED. SOME EXCEPTIONS MAY APPLY; REFER TO NEVADA STORMWATER GENERAL PERMIT FOR CONSTRUCTION ACTIVITY NVR100000, SECTION III.A.5.
4. AT A MINIMUM, THE CONTRACTOR OR HIS AGENT SHALL INSPECT ALL DISTURBED AREAS, AREAS USED FOR STORAGE OF MATERIALS AND EQUIPMENT THAT ARE EXPOSED TO PRECIPITATION, VEHICLE ENTRANCE AND EXIT LOCATIONS AND ALL BMPS WEEKLY, AND WITHIN 24 HOURS AFTER ANY ACTUAL RAIN EVENT OF 0.5 INCHES OR MORE. THE CONTRACTOR OR HIS AGENT SHALL UPDATE OR MODIFY THE STORMWATER POLLUTION PREVENTION PLAN AS NECESSARY. SOME EXCEPTIONS TO WEEKLY INSPECTIONS MAY APPLY, SUCH AS SUSPENSION OF LAND DISTURBANCE ACTIVITIES. REFER TO NEVADA STORMWATER GENERAL PERMIT FOR CONSTRUCTION ACTIVITY NVR100000, SECTION III.A.12.
5. ACCUMULATED SEDIMENT IN BMPS SHALL BE REMOVED WITHIN SEVEN DAYS AFTER A STORMWATER RUNOFF EVENT OR PRIOR TO THE NEXT ANTICIPATED STORM EVENT, WHICHEVER IS EARLIER. SEDIMENT MUST BE REMOVED WHEN BMP DESIGN CAPACITY HAS BEEN REDUCED BY 50 PERCENT OR MORE.

CITY OF LAS VEGAS STREETLIGHT NOTES

1. ALL STREET LIGHTING INSTALLATIONS SHALL BE IN ACCORDANCE WITH THE STREET LIGHTING PLANS, THE "UNIFORM STANDARD SPECIFICATIONS FOR PUBLIC WORKS CONSTRUCTION OFF-SITE IMPROVEMENTS, CLARK COUNTY AREA, NEVADA", LATEST REVISION, AND THE "UNIFORM STANDARD DRAWINGS FOR PUBLIC WORKS CONSTRUCTION OFF-SITE IMPROVEMENTS, CLARK COUNTY AREA, NEVADA", LATEST REVISION, AND ANY ADOPTED SPECIAL AREA STANDARDS.
2. NO DEVIATION OF STREET LIGHT, PULL BOX, CONDUITS (ETC.) LOCATIONS SHALL BE PERMITTED WITHOUT WRITTEN APPROVAL OF THE TRAFFIC ENGINEER AND THE CITY ENGINEER.
3. ALL EXISTING STREET LIGHTING SHALL REMAIN OPERATIONAL DURING CONSTRUCTION.
4. ALL STREET LIGHTING CONDUITS STUB SHALL HAVE AT LEAST ONE GREEN #8 THW WIRE INSTALLED, AS TRACER WIRE. WHEN "EMPTY" CONDUIT IS COMPLETELY INSTALLED FROM PB TO PB, IT SHALL HAVE MINIMUM OF 2 #4 AND 1 #8 THW WIRE WITH THE ENDS TAPED OR "SAFE OFF" PRIOR TO FINAL INSPECTION.
5. ANY STRUCTURE SUCH AS BLOCK WALLS, CHAIN LINK FENCES, RETAINING WALLS, ETC., SHALL LEAVE A MINIMUM CLEARANCE IN ACCORDANCE WITH THE USD NO. 320A.
6. AS-BUILT DRAWINGS SHALL BE SUPPLIED TO THE TEFO PRIOR TO ANY PRE-FINAL INSPECTION. THE AS-BUILT DRAWING NEEDS TO BE STAMPED AS-BUILT AND SIGNED BY THE PREPARER.
7. SERVICE POINT SHALL BE COORDINATED WITH NV ENERGY COMPANY, AND WHEREVER POSSIBLE, BE LOCATED NEAR THE CENTER OF THE CIRCUIT. SERVICE POINTS SHALL BE SHOWN ON THE CIVIL PLANS.
8. IT SHALL BE ASSUMED THAT IN THE ABSENCE OF AN EXISTING, WORKABLE CIRCUIT TO ATTACH TO, ALL INSTALLATIONS SHALL REQUIRE A NEW SERVICE FOR OPERATION OF THE CIRCUIT.
9. WHEREVER THERE IS AN OVERHEAD UTILITY THAT MAY CONFLICT WITH THE INSTALLATION OF STREET LIGHTING CIRCUITS AND/OR POLES, THESE CONFLICTS MUST BE RESOLVED BETWEEN THE DEVELOPER AND THE UTILITIES INVOLVED, AT NO EXPENSE TO THE CITY OF LAS VEGAS, BEFORE STREETLIGHT BASES ARE INSTALLED.
10. THE CONTRACTOR SHALL FURNISH COMPLETE SERVICE TO TRANSFORMERS AND CONTROL SYSTEMS IF REQUIRED ON PLANS.
11. THE DEVELOPER/OWNER WILL BE REQUIRED TO SUPPLY POWER TO ALL NEW PUBLIC STREET LIGHTS INSTALLED UNDER THIS DESIGN PRIOR TO BOND RELEASE OR PROJECT COMPLETION. THE DEVELOPER/OWNER WILL BE RESPONSIBLE FOR ALL ITEMS ASSOCIATED WITH THE INSTALLATION, CONSTRUCTION, ENERGIZING, MAINTENANCE AND OPERATIONAL COST OF SAID STREET LIGHTS PRIOR TO PROJECT COMPLETION. REFER TO THE PLAN FOR ANY NEW SERVICE REQUIREMENTS. THE TRANSFER OF OWNERSHIP FROM THE DEVELOPER/OWNER TO THE CITY OF LAS VEGAS FOR ALL NEW PUBLIC STREET LIGHT/S AND/OR SERVICE/S INSTALLED UNDER THIS PLAN WILL BE IN CONJUNCTION WITH THIS PROJECT COMPLETION. COORDINATE ALL MAINTENANCE AND OPERATIONAL TRANSFERS WITH THE CITY OF LAS VEGAS TRAFFIC ENGINEERING DEPARTMENT (TEFO) AT (702) 229-6331.

REVISED 04/15/10

CITY OF LAS VEGAS TRAFFIC NOTES

1. ALL CONSTRUCTION SIGNING, BARRICADING, AND TRAFFIC DELINEATION SHALL CONFORM TO THE "MANUAL ON UNIFORM TRAFFIC CONTROL DEVICES", LATEST EDITION.
2. THE STREET SIGN CONTRACTOR SHALL OBTAIN STREET NAMES AND BLOCK NUMBERING FROM THE PLANNING DEPARTMENT PRIOR TO CONSTRUCTION.
3. BEFORE ANY WORK IS STARTED IN THE RIGHT-OF-WAY, THE CONTRACTOR SHALL INSTALL ALL ADVANCED WARNING SIGNS FOR THE CONSTRUCTION ZONE. THE CONTRACTOR SHALL INSTALL TEMPORARY STOP SIGNS AT ALL NEW STREET ENCROACHMENTS INTO EXISTING CITY STREETS WHERE WARRANTED IMMEDIATELY AFTER FIRST GRADING WORK IS ACCOMPLISHED, AND SHALL MAINTAIN SAID SIGNS UNTIL PERMANENT SIGNS ARE INSTALLED.
4. WHEN A DESIGNATED "SAFE ROUTE TO SCHOOL" IS ENCROACHED UPON BY A CONSTRUCTION WORK ZONE AND PUBLIC WORKS STAFF IDENTIFIES A NEED FOR STUDENTS TO BE ASSISTED IN THE SAFE CROSSING THROUGH THAT WORK ZONE, THE CONTRACTOR SHALL BE REQUIRED TO PROVIDE A QUALIFIED "CROSSING GUARD". THE GUARD SHALL BE PRESENT FOR THE FULL DURATION OF TIME THAT CHILDREN ARE LIKELY TO BE PRESENT.
5. IF THE IMPROVEMENTS NECESSITATE THE OBLITERATION, TEMPORARY OBSTRUCTION, TEMPORARY REMOVAL OR RELOCATION OF ANY EXISTING TRAFFIC PAVEMENT MARKING, SUCH PAVEMENT MARKING SHALL BE RESTORED OR REPLACED WITH LIKE MATERIALS TO THE SATISFACTION OF THE CITY TRAFFIC ENGINEER.
6. THE CONTRACTOR SHALL BE RESPONSIBLE FOR PROVIDING AND INSTALLING ALL PERMANENT SIGNS SHOWN ON THE PLANS. ALL NEW SIGNS SHALL BE FABRICATED WITH DIAMOND GRADE VIP CLASS 6 REFLECTIVE SHEETING OR APPROVED EQUAL. ALL NEW TRAFFIC SIGNS, EXCEPT STREET NAME AND SCHOOL SPEED LIMIT SIGNS, SHALL HAVE 3M SERIES 1160 OR APPROVED EQUIVALENT ANTI-GRAFFITI PROTECTIVE OVERLAY FILM; SCHOOL ZONE SIGNS SHALL HAVE 3M SERIES 1150 ANIT-GRAFFITI PROTECTIVE OVERLAY FILM. STREET NAME SIGNS SHALL CONFORM IN THEIR ENTIRETY TO CURRENT CITY STANDARDS. ALL OTHER SIGNS SHALL BE STANDARD SIZE UNLESS OTHERWISE SPECIFIED ON THE PLANS. ALL SIGN POSTS SHALL BE INSTALLED IN ACCORDANCE WITH THE CURRENT CITY STANDARDS.
7. WHEN A PROPOSED STREET LIGHT STANDARD IS LOCATED WITHIN FIVE (5') FEET OF ANY PROPOSED SIGN SHOWN ON THE PLANS TO BE MOUNTED ON A SIGNPOST, THE SIGN SHALL BE MOUNTED ON THE STREET LIGHT STANDARD AND THE SIGNPOST SHALL BE ELIMINATED.
8. ALL PERMANENT TRAFFIC CONTROL DEVICES CALLED FOR HEREON SHALL BE IN PLACE AND IN FINAL POSITION PRIOR TO ALLOWING ANY PUBLIC TRAFFIC ONTO THE PORTIONS OF THE ROAD(S) BEING IMPROVED HERE UNDER, REGARDLESS OF THE STATUS OF COMPLETION OF PAVING OR OTHER OFF-SITE IMPROVEMENTS CALLED FOR BY THESE PLANS.
9. STREET SIGNS AND STOP SIGNS SHALL BE INSTALLED PER CITY STANDARD SPECIFICATIONS FOR PLACEMENT OF STREET NAME SIGNS.
10. THE CONTRACTOR SHALL PROVIDE ALL NECESSARY TRAFFIC CONTROL DEVICES AND FLAGGERS TO INSURE THE SAFETY OF THE PUBLIC IN OR AROUND THE WORK AREA. THE CONTRACTOR SHALL HAVE A CERTIFIED ATSSA TRAFFIC CONTROL TECHNICIAN OR IMSA WORK ZONE SAFETY SPECIALIST SET UP, MAINTAIN AND/OR REMOVE ALL TRAFFIC CONTROL DEVICES IN THE CITY OF LAS VEGAS RIGHT-OF-WAY.
11. WORK IN PUBLIC STREETS, ONCE BEGUN, SHALL BE EXPEDITED TO COMPLETION SO AS TO PROVIDE MINIMUM INCONVENIENCE TO ADJACENT PROPERTY OWNERS AND TO THE TRAVELING PUBLIC.
12. THE CONTRACTOR SHALL BE RESPONSIBLE FOR NOTIFYING CITIZENS AREA TRANSIT (C.A.T.) IF THE CONSTRUCTION INTERRUPTS OR RELOCATES A BUS STOP OR HAS AN ADVERSE EFFECT ON BUS SERVICE ON THAT STREET TO ARRANGE FOR TEMPORARY RELOCATION OF STOP.
13. GUARDS SHALL BE OBTAINED BY CONTACTING THE METROPOLITAN POLICE DEPARTMENT SPECIAL EVENTS UNIT (PHONE # 828-3442) WHO WILL PROVIDE OFFICERS PROPERLY TRAINED IN TRAFFIC CONTROL. FEES FOR THE USE OF THESE OFFICERS SHALL BE SET BY METRO AND WILL BE PAID BY THE CONTRACTOR. THE CONTRACTOR IS RESPONSIBLE FOR ALL ARRANGEMENTS WITH METRO.
14. ANY WORK WITHIN 300' OF A SIGNALIZED INTERSECTION WILL BE NIGHT WORK, UNLESS OTHERWISE DIRECTED BY THE CITY OF LAS VEGAS TRAFFIC ENGINEER.
15. CONTRACTOR SHALL CONTACT THE TRAFFIC ENGINEERING DIVISION (TRANSPORTATION SECTION) THROUGH THE PROJECT'S OFFSITE INSPECTOR PRIOR TO INITIATING PAVING TO RECEIVE DIRECTION FOR ANY PERMANENT OR TEMPORARY MODIFICATIONS TO THE APPROVED DRAWINGS REGARDING FINAL PAVEMENT TRANSITIONS, MARKINGS AND SIGNING THAT ARE REQUIRED TO MATCH ADJACENT ROADWAY SEGMENTS. THE CONTRACTOR SHALL PROVIDE A DRAWING FOR APPROVAL BY THE TRAFFIC ENGINEERING DIVISION DEPICTING ANY ADJUSTMENTS TO THE FINAL PAVEMENT MARKINGS AND SIGNAGE, WHICH MAY INCLUDE OMITTING, ADDING OR MODIFYING PAVEMENT MARKINGS AND TRAFFIC CONTROL SIGNS SUCH THAT ADEQUATE TRANSITIONS AND LANE TERMINATIONS BETWEEN ADJACENT ROADWAY SEGMENTS ARE CONSTRUCTED.

REVISED 4/15/10

CITY OF LAS VEGAS FIRE AND RESCUE GENERAL NOTES

1. ALL WORK SHALL BE DONE IN STRICT ACCORDANCE WITH THE LAS VEGAS FIRE AND RESCUE ADOPTED FIRE CODE ORDINANCE #6325 FOR HYDRANT SPECIFICATIONS AND HYDRANT INSTALLATION SPECIFICATIONS.
2. ONLY FIRE HYDRANTS THAT ARE ON THE LAS VEGAS VALLEY WATER DISTRICT'S – APPROVED PRODUCTS LIST ARE ALLOWED TO BE INSTALLED.
3. A PERMIT IS REQUIRED FROM LAS VEGAS FIRE AND RESCUE FOR THE INSTALLATION OF ON-SITE WATER LINES AND FIRE HYDRANTS. THE PERMIT AND CONTRACTORS MATERIAL TEST CERTIFICATE FOR UNDERGROUND PIPING FORM SHALL BE OBTAINED FROM THE FIRE PROTECTION ENGINEER BEFORE COMMENCEMENT OF WORK. [IFC SECTION 105.7.12]
4. ON ANY RESIDENTIAL OR COMMERCIAL INSTALLATIONS, FIRE HYDRANTS SHALL BE INSTALLED AND FIRE APPARATUS ACCESS ROADS SHALL BE MAINTAINED BEFORE COMMENCEMENT OF ANY COMBUSTIBLE CONSTRUCTION. ALL FIRE HYDRANTS SHALL BE IN GOOD WORKING ORDER AND SHALL BE CAPABLE OF DELIVERING THE REQUIRED FIRE FLOW. [IFC SECTION 3310, SECTION 3312]
5. TO IDENTIFY FIRE HYDRANT LOCATIONS, CONTRACTOR SHALL PLACE A BLUE REFLECTIVE MARKER AT THE CENTER LINE OF STREET ADJACENT TO THE FIRE HYDRANTS. [IFC SECTION 507.5.7.3].
6. ALL UNDERGROUND INSPECTIONS, PRESSURE AND FLUSH VERIFICATIONS OF ALL FIRE HYDRANTS AND FIRE LINES, SHALL BE CONDUCTED BEFORE COVERING THE LINES. CENTER LOADING IS ACCEPTABLE FOR THE HYDRO TESTS WITH PRIOR FIRE PREVENTION APPROVAL. [IFC SECTION 106.3]
7. ALL ON-SITE UNDERGROUND WATER MAINS AND MATERIALS SHALL BE U.L. LISTED, A.W.W.A. APPROVED AND SHALL BE RATED FOR THE APPROPRIATE WORKING PRESSURE. [IFC SECTION 507.2.1, NFPA 24]
8. PAINTING OF CURBS, FIRE HYDRANTS, PADS, PROTECTION OF FIRE HYDRANTS FROM PHYSICAL DAMAGE, AND ALL OTHER WORK NECESSARY PER PLANS SHALL BE COMPLETED BEFORE APPROVAL BY LAS VEGAS FIRE AND RESCUE, FIRE PREVENTION DIVISION. [IFC SECTION 507]
9. PRIVATE FIRE HYDRANTS SHALL BE PAINTED RED. [IFC SECTION 507.5.7.1]
10. PRIOR TO THE FINAL OCCUPANCY, A FIRE FLOW TEST SHALL BE WITNESSED BY LAS VEGAS FIRE AND RESCUE, FIRE PREVENTION DIVISION TO VERIFY AVAILABILITY OF THE REQUIRED FIRE FLOW. [IFC SECTION 507]
11. FIRE HYDRANTS SPACING SHALL BE AS FOLLOWS: [IFC SECTION C102]
    RESIDENTIAL – 500 FT UNSPRINKLERED; 600 FT SPRINKLERED.
    COMMERCIAL – 300 FT UNSPRINKLERED; 400 FT SPRINKLERED.
12. WHERE NEW WATER MAINS ARE EXTENDED ALONG STREETS OR NEW STREETS ARE INSTALLED WHERE FIRE HYDRANTS ARE NOT NEEDED FOR PROTECTION OF THE STRUCTURES, FIRE HYDRANTS SHALL BE INSTALLED AT A MAXIMUM OF 1,000 FT SPACING, TO PROVIDE FOR TRANSPORTATION HAZARDS. WHERE STREETS ARE PROVIDED WITH MEDIAN DIVIDERS OR HAVE FOUR (4) OR MORE TRAFFIC LANES AND HAVE A TRAFFIC COUNT OF MORE THAN 30,000 PER DAY, HYDRANTS ARE REQUIRED ON EACH SIDE OF THE STREET SPACED AT 500 FT ON AN ALTERNATING BASIS. [IFC SECTION C102.8]
13. NO FIRE HYDRANTS SHALL BE LOCATED WITHIN THE RADIUS OF A CUL-DE-SAC OR WITHIN 20 FT OF THE PERIMETER OF THE RADIUS OF THE CUL-DE-SAC.
14. NO FIRE HYDRANTS SHALL BE LOCATED WITHIN 6 FT OF ANY CURB RETURN, DRIVEWAY, POWER POLE, STREETLIGHT OR ANY OTHER OBSTRUCTION. [IFC SECTION C102.12]
15. A MAXIMUM DISTANCE FROM A FIRE HYDRANT TO A ONE-TWO FAMILY DWELLING SHALL NOT EXCEED 300 FT, AS MEASURED BY AN APPROVED ROUTE. [IFC SECTION C102.4]
16. THE MAXIMUM DISTANCE FROM A FIRE HYDRANT TO A FIRE DEPARTMENT CONNECTION (FDC) SHALL NOT EXCEED 100 FT, AS MEASURED BY AN APPROVED ROUTE. [IFC SECTION C102.7]
17. THE MAXIMUM DISTANCE FROM A FIRE HYDRANT TO THE END OF A DEAD-END STREET SHALL NOT EXCEED 200 FT. [IFC SECTION C102.6]
18. TWO (2) SOURCES OF SUPPLY ARE REQUIRED WHENEVER THERE IS 4 OR MORE FIRE HYDRANTS/SPRINKLER LEAD-INS ARE INSTALLED ON A SINGLE SYSTEM. SECTIONAL CONTROL VALVES SHALL BE INSTALLED SO THAT NO MORE THAN 2 FIRE HYDRANTS CAN BE OUT OF SERVICE DUE TO A BREAK IN A WATER MAIN. [IFC SECTION C104]
19. ALL FIRE APPARATUS ACCESS ROADS SHALL BE PAVED TO PROVIDE ALL-WEATHER DRIVING CAPABILITIES, AND SHALL BE DESIGNED AND MAINTAINED TO SUPPORT THE IMPOSED LOADS OF THE FIRE APPARATUS. [IFC SECTION 503.2.3]
20. THE GRADIENT FOR THE FIRE APPARATUS ACCESS ROADS SHALL NOT EXCEED 12%. ANGLES OF APPROACH AND ANGLES OF DEPARTURE SHALL NOT EXCEED 6% FOR 25 FT PRIOR TO OR AFTER THE GRADE CHANGE. ADJACENT TO THE STRUCTURES GRADIENT SHALL NOT EXCEED 6%. [IFC SECTION 503.2.7, 503.2.8]
21. THE TURNING RADIUS OF THE FIRE APPARATUS ACCESS ROADS SHALL BE NO LESS THAN 52 FT OUTSIDE AND 28 FT INSIDE TURNING RADIUS. [IFC 503.2.4]
22. VERTICAL CLEARANCE OF ALL FIRE APPARATUS ACCESS ROADS SHALL NOT BE LESS THAN 13 FT 6 IN. [IFC SECTION 503.2.1]
23. FIRE DEPARTMENT ACCESS ROADS SHALL HAVE A MINIMUM UNOBSTRUCTED WIDTH OF NOT LESS THAN 40 FT FLOW-LINE TO FLOW-LINE WITH PARALLEL PARKING PERMITTED ON BOTH SIDES. NOT LESS THAN 32 FT WIDE, FLOW-LINE TO FLOW -LINE, WHERE PARKING IS PERMITTED ONLY ON ONE SIDE OF THE FIRE APPARATUS ACCESS ROAD. NOT LESS THAN 24 FT WIDE, FLOW-LINE TO FLOW-LINE, WHERE NO PARKING IS PERMITTED ON EITHER SIDE. FIRE LANES THROUGH PARKING LOTS SHALL NOT BE LESS THAN 24 FT. [IFC SECTION 503.2.1.1]
24. A FIRE APPARATUS ACCESS ROAD SHALL BE REQUIRED WHEN ANY PORTION OF AN EXTERIOR WALL FO THE FIRST STORY IS LOCATED MORE THAN 150 FT FROM A FIRE DEPARTMENT VEHICLE ACCESS. THIS DISTANCE COULD BE INCREASED TO 250 FT IF THE BUILDING IS SPRINKLERED. [IFC SECTION 503.1.1]
25. APPROVED SECONDARY FIRE APPARATUS ACCESS SHALL BE PROVIDED FOR 100 OR MORE DWELLING UNITS, ROAD(S) WITH DEAD-EANDS OR WITH A SINGLE POINT OF ACCESS IN EXCESS OF 600 FT. COMMERCIAL AND INDUSTRIAL DEVELOPMENTS WHERE BUILDINGS EXCEED 2 STORIES OR 30 FEET IN HEIGHT, OR EXCEEDING 62,000 SQUARE FEET IN AREA. [IFC SECTION 503.1.2]
26. ALL DEAD-END FIRE APPARATUS ROADS AND/OR FIRE LANES, PUBLIC OR PRIVATE, IN EXCESS OF 150 FT IN LENGTH SHALL BE PROVIDED WITH AN APPROVED TURN AROUND HAVING A MINIMUM DIAMETER OF 81 FT. [IFC SECTION 503.2.5]
27. ALL FIRE APPARATUS ACCESS ROADS SHALL BE MARKED BY PLACING APPROVED SIGNS AT THE START OF THE DESIGNATED FIRE LANE, ONE SIGN AT THE END OF THE FIRE LANE AND WITH SIGNS AT INTERVALS OF 100 FT ALONG THE DESIGNATED FIRE LANES. SIGNS TO BE PLACED ON BOTH SIDES OF AN ACCESS ROADWAY IF NEEDED TO PREVENT PARKING ON EITHER SIDE. SIGNS TO BE INSTALLED NO HIGHER THAN 10 FT OR LESS THAN 6 FT FROM THE ROADWAY LEVEL. THE CURB ALONG OR ON THE PAVEMENT OR CEMENT (IF NO CURB IS PROVIDED) SHALL BE PAINTED WITH A RED WEATHER RESISTANT PAINT IN ADDITION TO THE SIGNS. [IFC SECTION 503.3]
28. ELECTRICALLY CONTROLLED ACCESS GATES SHALL BE PROVIDED WITH AN APPROVED EMERGENCY VEHICLE DETECTOR/RECEIVER SYSTEM. SAID SYSTEM SHALL BE INSTALLED IN ACCORDANCE WITH THE IFC SECTION 503.6 AND IFC APPENDIX M.

REVISED MARCH 1, 2016

CITY OF LAS VEGAS GENERAL NOTES

1. ALL CONSTRUCTION AND MATERIALS SHALL BE IN ACCORDANCE WITH THE "UNIFORM STANDARD SPECIFICATIONS FOR PUBLIC WORKS CONSTRUCTION OFF-SITE IMPROVEMENTS, CLARK COUNTY AREA NEVADA", LATEST ISSUE; THE "UNIFORM STANDARD DRAWINGS FOR PUBLIC WORKS CONSTRUCTION, CLARK COUNTY AREA NEVADA", LATEST REVISED EDITION; THE "SUMMERLIN IMPROVEMENT STANDARDS" FOR WORK IN THE SUMMERLIN AREA; AND OTHER APPLICABLE APPROVED STANDARDS ISSUED BY THE CONTROLLING AGENCY; THE UNIFORM BUILDING CODE; AND ALL LOCAL CITY CODES AND ORDINANCES APPLICABLE, EXCEPT AS NOTED ON THIS SHEET AS "DEVIATIONS FROM STANDARDS".
2. THE EXISTENCE AND LOCATION OF ANY OVERHEAD OR UNDERGROUND UTILITY LINES, PIPES, OR STRUCTURES SHOWN ON THESE PLANS ARE OBTAINED BY A RESEARCH OF THE AVAILABLE RECORDS. EXISTING UTILITIES AS SHOWN FROM CLV PLANS LIBRARY ARE APPROXIMATE AND FOR RECORD PURPOSES. EXISTING UTILITIES ARE LOCATED ON PLANS ONLY FOR THE CONVENIENCE OF THE CONTRACTOR. EXISTING UTILITY SERVICE LATERALS MAY NOT BE SHOWN ON THE PLANS. THE CONTRACTOR SHALL, AT HIS OWN EXPENSE, LOCATE ALL UNDERGROUND AND OVERHEAD INTERFERENCE, WHICH MAY AFFECT HIS OPERATION DURING CONSTRUCTION AND SHALL TAKE ALL NECESSARY PRECAUTIONS TO AVOID DAMAGE TO SAME. THE CONTRACTOR SHALL USE EXTREME CAUTION WHEN WORKING NEAR OVERHEAD UTILITIES SO AS TO SAFELY PROTECT ALL PERSONNEL AND EQUIPMENT, AND SHALL BE RESPONSIBLE FOR ALL COST AND LIABILITY IN CONNECTION THEREWITH.
3. THE CONTRACTOR SHALL TAKE ALL PRECAUTIONARY MEASURES NECESSARY TO PROTECT EXISTING UTILITY LINES, STRUCTURES AND STREET IMPROVEMENTS WHICH ARE TO REMAIN IN PLACE, FROM DAMAGE, AND ALL SUCH IMPROVEMENTS OR STRUCTURES DAMAGED BY THE CONTRACTOR'S OPERATIONS SHALL BE REPAIRED OR REPLACED SATISFACTORY TO THE CITY ENGINEER OR OWNING UTILITY COMPANY AT THE EXPENSE OF THE CONTRACTOR.
4. ALL CONSTRUCTION SHALL BE AS SHOWN ON THESE PLANS, ANY REVISIONS SHALL HAVE THE PRIOR WRITTEN APPROVAL OF THE CITY ENGINEER.
5. TYPE V CEMENT SHALL BE USED IN ALL OFF-SITE CONCRETE WORK. CONCRETE TO BE 3000 P.S.I. MINIMUM @ 28 DAYS. MIX DESIGNS TO BE APPROVED BY THE CITY, PRIOR TO THE USE ON THE PROJECT.
6. PERMITS ARE REQUIRED FOR ANY WORK IN THE PUBLIC RIGHT-OF-WAY. THE CONTRACTOR SHALL SECURE ALL PERMITS AND INSPECTIONS REQUIRED FOR THIS CONSTRUCTION.
7. EXPANSION JOINTS REQUIRED, MAXIMUM EVERY 300' IN EXTRUDED-TYPE CURB.
8. AC PAVEMENT TO BE ONE-HALF INCH 1/2" ABOVE LIP OF ALL GUTTERS AFTER COMPACTION, EXCEPT AT SIDEWALK RAMPS AND CROSS GUTTERS.
9. CURB AND GUTTER FOUND TO BE UNACCEPTABLE TO THE CITY OF LAS VEGAS SHALL BE REMOVED AND REPLACED PER USD 216.
10. SIDEWALK RAMPS SHALL BE CONSTRUCTED IN EACH QUADRANT OF AN INTERSECTION PER USD 235. EXACT LOCATION OF RAMPS MAY BE ADJUSTED IN THE FIELD BY A CITY INSPECTOR.
11. CONTRACTOR SHALL PROVIDE ALL NECESSARY HORIZONTAL AND VERTICAL TRANSITIONS BETWEEN NEW CONSTRUCTION AND EXISTING SURFACES TO PROVIDE FOR PROPER DRAINAGE AND FOR INGRESS AND EGRESS TO NEW CONSTRUCTION. THE EXTENT OF TRANSITIONS TO BE AS SHOWN ON PLANS.
12. ALL GRADING WORK SHALL CONFORM TO THE SOILS REPORT AS PREPARED BY THE (COMPANY, _REPORT #, DATE) APPROVED BY THE CITY ENGINEER, AND AS SHOWN ON THESE PLANS.
13. EXACT LOCATION OF ALL SAWCUT LINES MAY BE DETERMINED IN THE FIELD BY A CITY OF LAS VEGAS ENGINEER IF LOCATION ON PLANS IS NOT CLEARLY SHOWN, OR EXISTING PAVEMENT CONDITION REQUIRES RELOCATION.
14. THE CONTRACTOR SHALL TAKE ALL PRECAUTIONS NECESSARY TO PROTECT EXISTING PERMANENT SURVEY MONUMENTS. ANY MONUMENTS DISTURBED SHALL BE REPLACED AND ADJUSTED PER AVAILABLE RECORDS IN ACCORDANCE WITH N.R.S. STATUTE NO. 625.380 AND CITY OF LAS VEGAS TITLE 18, APPENDIX D.
15. UTILITY COMPANY METER BOXES, MANHOLE LIDS, VALVE COVERS, ETC., SHALL BE LOCATED OUT OF DRIVEWAYS, DRIVEWAY APRONS, FLOW LINES, AND CROSS GUTTERS UNLESS WRITTEN APPROVAL IS GRANTED BY THE UTILITY COMPANY AND THE CITY ENGINEER.

    WALL NOTES:
16. ALL WALLS, NEW OR EXISTING, ARE ONLY SHOWN ON CIVIL PLANS FOR THE PURPOSE OF REVIEWING GRADING RELATIONSHIPS; FLOOD CONTROL AND SIGHT DISTANCE AT INTERSECTIONS. NEW WALLS REQUIRE A SEPARATE PERMIT AND INSPECTION BY THE BUILDING DEPARTMENT.
17. ASPHALT MIX DESIGN MUST BE SUBMITTED AND APPROVED BY THE CITY ENGINEER PRIOR TO THE PLACEMENT OF ASPHALT WITHIN CITY RIGHT OF WAY.
18. CONTRACTOR SHALL ADJUST ALL NEW AND EXISTING INLETS, VALVE BOXES, MANHOLE RIMS, AND SEWER CLEAN OUTS, ETC. TO FINISH GRADE AS APPLICABLE WHETHER OR NOT THEY ARE SHOWN ON THE PLANS.
19. MATERIALS, HANDLING AND PLACEMENT OF PORTLAND CEMENT CONCRETE SHALL BE IN ACCORDANCE WITH APPLICABLE SECTIONS OF NDOT OR THE CLARK COUNTY AREA SPECIFICATIONS (AS APPLICABLE) AND THE PLANS AND DETAILS SHOWN HEREON.
20. WHEN INSTALLING UNDERGROUND FACILITIES THAT REQUIRE UNDERGROUND LOCATING DEVICES SUCH AS MARKER BALLS, LOCATING RIBBON, ETC, THE CONTRACTOR SHALL PROVIDE WRITTEN DOCUMENTATION TO THE OFFSITE INSPECTION AND TESTING CERTIFYING THAT ALL DEVICES HAVE BEEN PLACED AND VERIFIED TO BE IN GOOD WORKING CONDITION PRIOR TO THE CONSTRUCTION OF ANY ROAD BASE.
21. SANITARY SEWER AND STORM DRAIN FACILITIES SHOWN ON THESE PLANS SHALL BE USED TO MEET THE REQUIREMENTS OF NRS 455 AND SHALL SHOW AT A MINIMUM THE HORIZONTAL AND VERTICAL (INVERT) LOCATION OF PUBLIC SEWER MANHOLES, STORM DRAIN MANHOLES, STORM DRAIN LATERALS AT THE CONNECTION TO THE STORM DRAIN MAIN AND AT THE CONNECTION TO A DROP INLET, AND THE CONNECTION OF SEWER SERVICE LATERALS TO THE SEWER MAIN AND WHERE THE SEWER SERVICE LATERALS EXIT THE PUBLIC RIGHT-OF-WAY. ANY DEVIATIONS FROM THE INFORMATION SHOWN SHALL BE NOTED AND SUBMITTED AS A REVISION TO THE PLANS AND APPROVED PRIOR TO ACCEPTANCE OF FACILITY VIDEO INSPECTION.
22. CCTV VIDEO INSPECTION IS REQUIRED FOR ALL SEWER AND STORM DRAINS. THE CCTV VIDEO INSPECTIONS NEED TO BE PERFORMED PER THE DESIGN AND CONSTRUCTION STANDARDS FOR WASTEWATER COLLECTION SYSTEMS LATEST EDITION.
23. A SEPARATE BORING PERMIT IS REQUIRED FOR ALL BORING ACTIVITIES.

REVISED 2/03/15

BASIS OF BEARINGS

NORTH 05°36'32" WEST BEING THE BEARING OF THE WEST LINE OF THE NORTHWEST QUARTER (NW 1/4) OF SECTION 33, TOWNSHIP 20 SOUTH, RANGE 59 EAST, M.D.M. AS SHOWN IN BOOK 149, PAGE 46 PLATS ON FILE AT THE CLARK COUNTY, NEVADA RECORDER'S OFFICE.

BENCHMARK

DESCRIPTION	NAVD 88 DATUM	NAVD 88 DATUM
CITY OF LAS VEGAS VERTICAL CONTROL POINT "D368", BEING A USC&GS DISC SET IN ROCK SOUTH OF CHARLESTON BLVD & WEST OF DEENTION BASIN. CITY OF LAS VEGAS VERTICAL CONTROL 2008 AND ADJUSTMENT (UPDATED 05/24/2010) BASED ON NORTH AMERICAN VERTICAL DATUM OF 1988 (NAVD'88).	3246.63 (FEET)	989.574 (METERS)

L17-01470 715-199

STATE OF NEVADA PROFESSIONAL ENGINEER ROY D. CLARK CIVIL No. 8354 Exp. 12/31/2018
DATE: 1/3/18

REV	DATE	DESCRIPTION	DATE	AGEN APP	DATE	GCW APP

PROJECT NO. 889-002
DESIGN:
DRAWN:
CHECK:
PLOT DATE: 01-02-18
PLOT TIME: 17:16:32

GCW ENGINEERS \ SURVEYORS
1555 S. RAINBOW BLVD.
LAS VEGAS, NV 89146
T: 702.804.2000
F: 702.804.2299
gcwengineering.com

F:\Projects\800\889-002\DWG\Production\PHASE-II\P2-889-002_cC1.1_CO.dwg
Daniel Lee

CA LAS VEGAS SVD, LLC
DORAL ACADEMY
RED ROCK CAMPUS HIGH SCHOOL
GENERAL NOTES

DRAWING
C1.3
3 OF 13 SHTS

PROJ#:125994 AGREE#:116643 QS:137-34-NW

H: / CLV: L17-01470

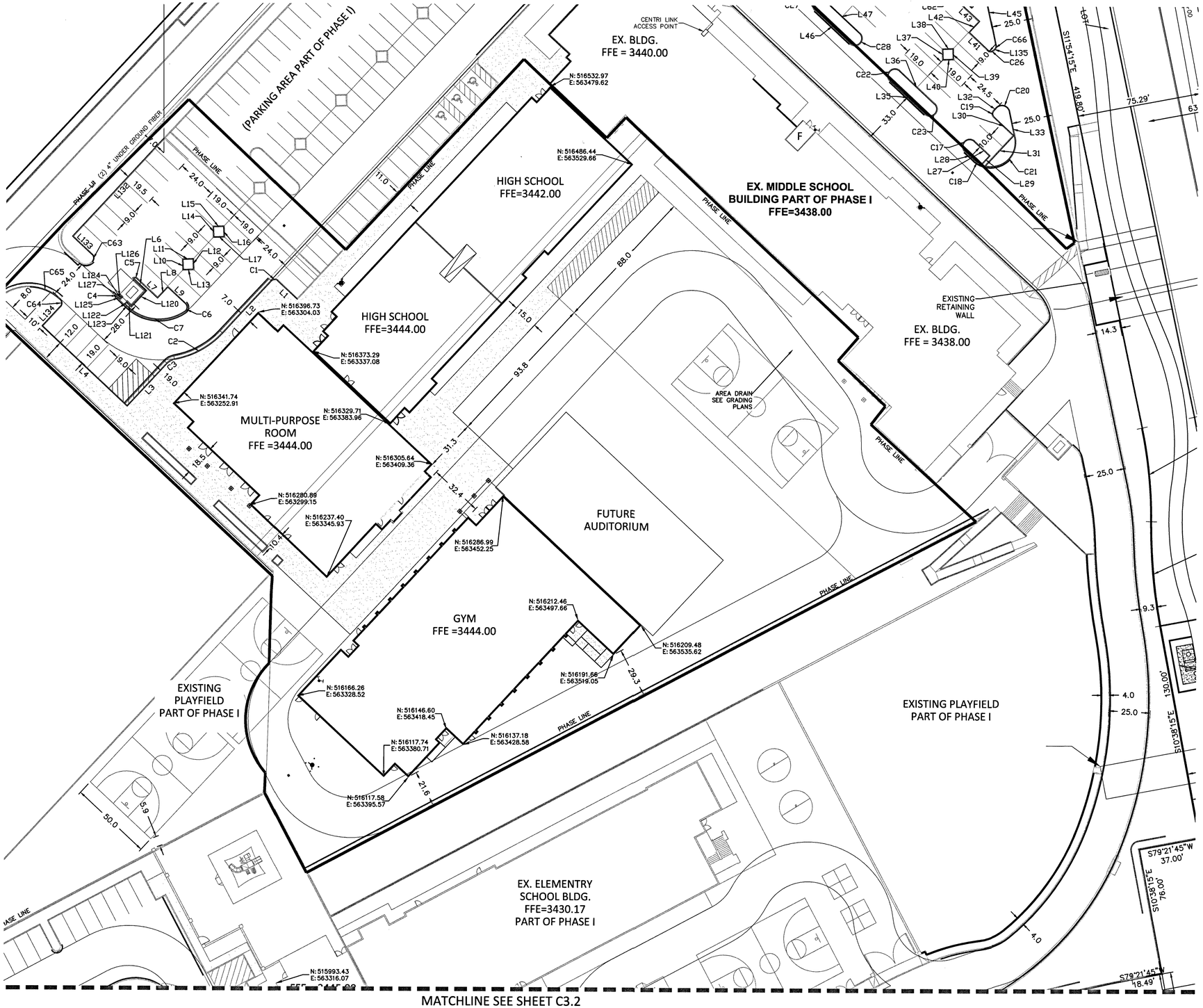

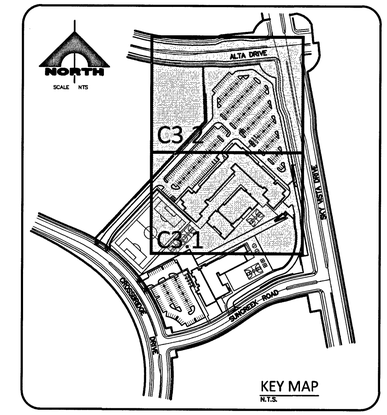

KEY MAP
N.T.S.

SIGHT VISIBILITY ZONE LEGEND

SIGHT VISIBILITY ZONE

SIGHT VISIBILITY ZONE NOTE:

NO WALLS, FENCES SHRUBS, UTILITY APPURTENANCES OR ANY OTHER OBJECT, OTHER THAN TRAFFIC CONTROL DEVICES, FIRE HYDRANTS, TREES, AND STREET LIGHT POLES, MAY BE CONSTRUCTED OR INSTALLED WITHIN THE SIGHT VISIBILITY ZONE UNLESS SAID OBJECT IS MAINTAINED AT LESS THAN 24 INCHES IN HEIGHT, MEASURED FROM TOP OF CURB, OR WHERE NO CURB EXIST, A HEIGHT OF 27 INCHES MEASURED FROM THE TOP OF ADJACENT ASPHALT, GRAVEL OR PAVEMENT STREET SURFACE. THIS RESTRICTION EXTENDS ALONG THE SIGHT VISIBILITY LINE THROUGH LANDSCAPED MEDIANS.

NOTE:

ALL DIMENSIONS ARE TAKEN FROM BACK OF CURB UNLESS OTHERWISE NOTED. SEE DETAIL "A" SHEET C3.5 FOR SIGHT VISIBILITY ZONE DETAIL.

NORTH
SCALE 1"=30'

30 0 30 60
SCALE FEET

BASIS OF BEARINGS

NORTH 05°36'32" WEST BEING THE BEARING OF THE WEST LINE OF THE NORTHWEST QUARTER (NW 1/4) OF SECTION 33, TOWNSHIP 20 SOUTH, RANGE 59 EAST, M.D.M. AS SHOWN IN BOOK 149, PAGE 46 PLATS ON FILE AT THE CLARK COUNTY, NEVADA RECORDER'S OFFICE.

BENCHMARK

DESCRIPTION	NAVD 88 DATUM	NAVD 88 DATUM
CITY OF LAS VEGAS VERTICAL CONTROL POINT "D368", BEING A USC&GS DISC SET IN ROCK SOUTH OF CHARLESTON BLVD & WEST OF DEENTION BASIN. CITY OF LAS VEGAS VERTICAL CONTROL 2008 AND ADJUSTMENT (UPDATED 05/24/2010) BASED ON NORTH AMERICAN VERTICAL DATUM OF 1988 (NAVD'88).	3246.63 (FEET)	989.574 (METERS)

Call before you Dig
Avoid cutting underground utility lines. It's costly.
Call 811
or
1-800-227-2600
AND
CLARK COUNTY TRAFFIC OPERATIONS
1-702-455-6000

AVOID HITTING OVERHEAD POWER LINES. IT'S COSTLY
CALL BEFORE YOU DO OVERHEAD
1-702-227-2929

FAST
Call before you UnderGround
1-702-432-5300
FREEWAY AND ARTERIAL SYSTEM OF TRANSPORTATION

199
L17-01470 7/5-~~7/26~~

ENGINEER - STATE OF NEVADA
ROY D. CLARK
Exp. 12/31/2018
CIVIL
No. 8354
PROFESSIONAL
DATE: 1/3/18

REV	DATE	DESCRIPTION	DATE	AGEN APP	DATE	GOW APP

PROJECT NO. 889-002
DESIGN:
DRAWN:
CHECK:
PLOT DATE: 01-02-18
PLOT TIME: 17:19:17

GCV
ENGINEERS\SURVEYORS
1555 S. RAINBOW BLVD.
LAS VEGAS, NV 89146
T: 702.804.2000
F: 702.804.2299
gcvengineering.com

F:\Projects\800\889-002\DWG\Production\PHASE-II\P2-889-002_pc3.1_HRZ
Daniel Lee

CA LAS VEGAS SVD, LLC

DORAL ACADEMY
RED ROCK CAMPUS HIGH SCHOOL

HORIZONTAL CONTROL PLAN I

DRAWING
C3.1
4 OF 13 SHTS

H: / CLV: L17-01470

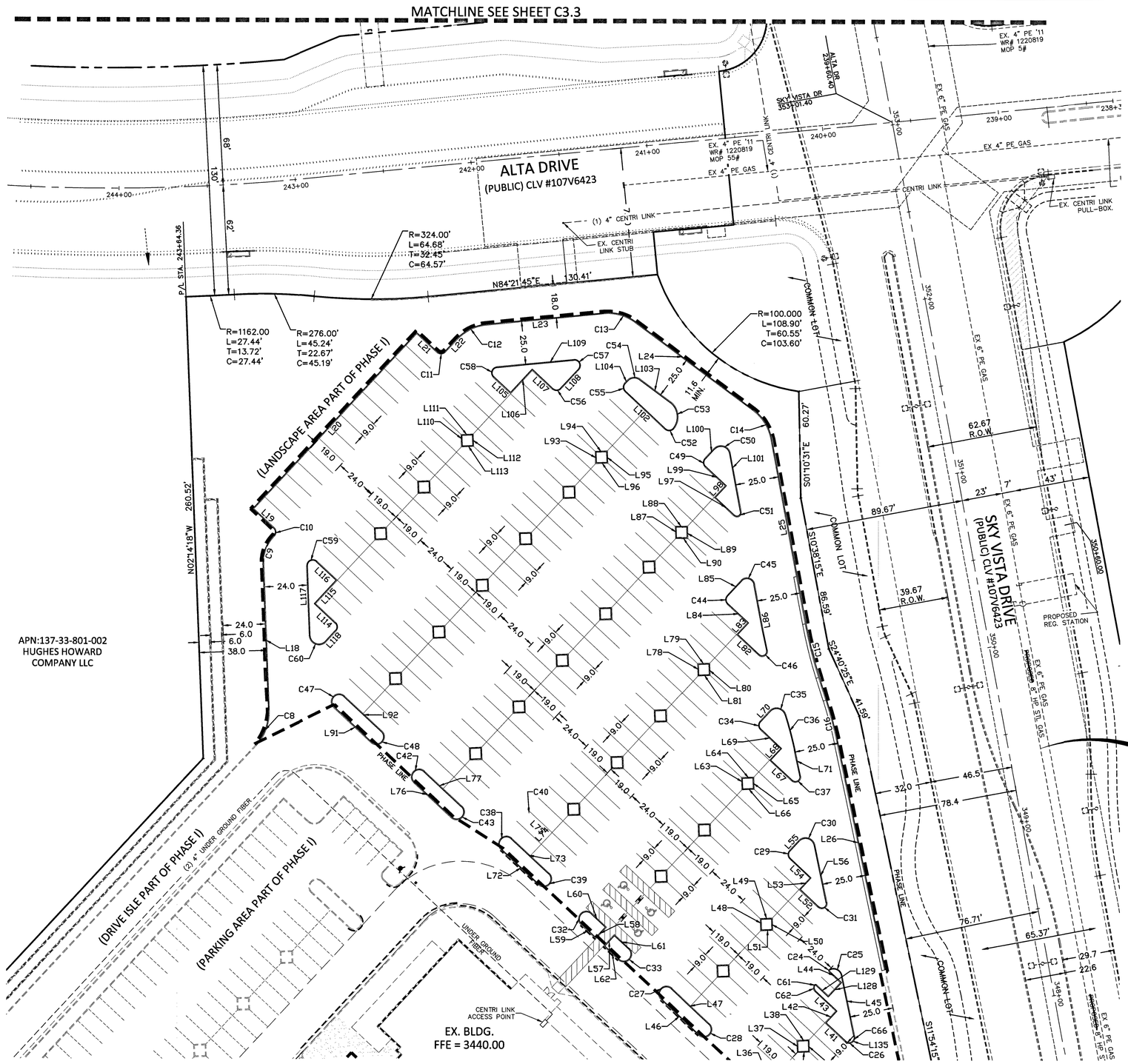

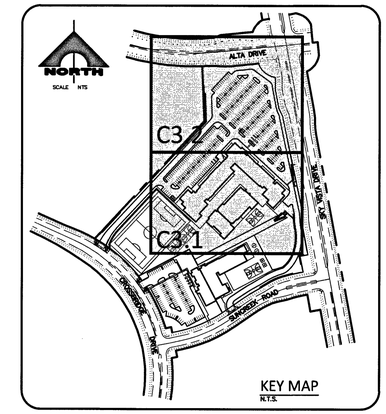

SIGHT VISIBILITY ZONE LEGEND

SIGHT VISIBILITY ZONE

SIGHT VISIBILITY ZONE NOTE:

NO WALLS, FENCES SHRUBS, UTILITY APPURTENANCES OR ANY OTHER OBJECT, OTHER THAN TRAFFIC CONTROL DEVICES, FIRE HYDRANTS, TREES, AND STREET LIGHT POLES, MAY BE CONSTRUCTED OR INSTALLED WITHIN THE SIGHT VISIBILITY ZONE UNLESS SAID OBJECT IS MAINTAINED AT LESS THAN 24 INCHES IN HEIGHT, MEASURED FROM TOP OF CURB, OR WHERE NO CURB EXIST, A HEIGHT OF 27 INCHES MEASURED FROM THE TOP OF ADJACENT ASPHALT, GRAVEL OR PAVEMENT STREET SURFACE. THIS RESTRICTION EXTENDS ALONG THE SIGHT VISIBILITY LINE THROUGH LANDSCAPED MEDIANS.

NOTE:

ALL DIMENSIONS ARE TAKEN FROM BACK OF CURB UNLESS OTHERWISE NOTED. SEE DETAIL "A" SHEET C3.5 FOR SIGHT VISIBILITY ZONE DETAIL.

NORTH
SCALE 1"=30'
30 0 30 60
SCALE FEET

BASIS OF BEARINGS

NORTH 05°36'32" WEST BEING THE BEARING OF THE WEST LINE OF THE NORTHWEST QUARTER (NW 1/4) OF SECTION 33, TOWNSHIP 20 SOUTH, RANGE 59 EAST, M.D.M. AS SHOWN IN BOOK 149, PAGE 46 PLATS ON FILE AT THE CLARK COUNTY, NEVADA RECORDER'S OFFICE.

BENCHMARK

DESCRIPTION	NAVD 88 DATUM	NAVD 88 DATUM
CITY OF LAS VEGAS VERTICAL CONTROL POINT "D368", BEING A USC&GS DISC SET IN ROCK SOUTH OF CHARLESTON BLVD & WEST OF DEENTION BASIN.	3246.63 (FEET)	989.574 (METERS)
CITY OF LAS VEGAS VERTICAL CONTROL 2008 AND ADJUSTMENT (UPDATED 05/24/2010) BASED ON NORTH AMERICAN VERTICAL DATUM OF 1988 (NAVD'88).		

Call before you Dig
Avoid cutting underground utility lines. It's costly.
Call 811
1-800-227-2600
CLARK COUNTY TRAFFIC OPERATIONS 1-702-455-6000

AVOID HITTING OVERHEAD POWER LINES. IT'S COSTLY
CALL BEFORE YOU DO OVERHEAD
1-702-227-2929

FAST
Call before you UnderGround
1-702-432-5300
FREEWAY AND ARTERIAL SYSTEM OF TRANSPORTATION

L17-01470 7/5-~~1/25~~ 1/29

H: / CLV: L17-01470

STATE OF NEVADA PROFESSIONAL ENGINEER ROY D. CLARK Exp. 12/31/2018 CIVIL No. 8354 DATE: 1/5/18

REV	DATE	DESCRIPTION	DATE	AGEN APP	DATE	CCW APP

PROJECT NO. 889-002
DESIGN:
DRAWN:
CHECK:
PLOT DATE: 01-02-18
PLOT TIME: 17:26:39

GCW
1555 S. RAINBOW BLVD.
LAS VEGAS, NV 89146
T: 702.804.2000
F: 702.804.2299
gcwengineering.com
ENGINEERS\ SURVEYORS

F:\Projects\800\889-002\DWG\Production\PHASE-II\P2-889-002_cC3.1_LHR.dwg
Daniel Lee

CA LAS VEGAS SVD, LLC

DORAL ACADEMY
RED ROCK CAMPUS HIGH SCHOOL

HORIZONTAL CONTROL PLAN II

DRAWING
C3.2
5 OF 13 SHTS

BC LINE TABLE		
LINE #	DIRECTION	LENGTH
L1	N47°05'15"W	16.50'
L2	S42°54'45"W	43.12'
L3	S42°54'45"W	35.33'
L4	N47°04'25"W	70.52'
L6	N47°05'15"W	10.98'
L7	S47°05'15"E	17.00'
L8	N42°54'45"E	9.00'
L9	S47°05'15"E	14.37'
L10	S2°05'15"E	6.00'
L11	S87°54'45"W	6.00'
L12	N2°05'15"W	6.00'
L13	N87°54'45"E	6.00'
L14	S2°05'15"E	6.00'
L15	S87°54'45"W	6.00'
L16	N2°05'15"W	6.00'
L17	N87°54'45"E	6.00'
L18	N2°14'18"W	83.22'
L19	S47°05'15"E	16.00'
L20	S42°54'45"W	136.00'
L21	N47°05'15"W	16.00'

BC LINE TABLE		
LINE #	DIRECTION	LENGTH
L22	S42°54'45"W	9.82'
L23	S84°21'45"W	66.61'
L24	S53°34'33"E	82.97'
L25	N10°38'15"W	106.09'
L26	N11°54'15"W	130.40'
L27	N47°05'15"W	12.50'
L28	N47°05'12"W	7.74'
L29	N42°54'45"E	6.69'
L30	S47°05'14"E	16.49'
L31	N42°54'46"E	25.05'
L32	N42°59'22"E	2.53'
L33	N12°09'13"W	15.82'
L35	N47°05'15"W	29.00'
L36	N47°05'15"W	29.00'
L37	S2°05'15"E	6.00'
L38	S87°54'45"W	6.00'
L39	N2°05'15"W	6.00'
L40	N87°54'45"E	6.00'
L41	N47°05'14"W	15.50'
L42	N42°54'45"E	9.00'

BC LINE TABLE		
LINE #	DIRECTION	LENGTH
L43	N47°05'14"W	16.50'
L44	N47°05'14"W	9.25'
L45	N11°56'22"W	35.28'
L46	N47°05'15"W	29.00'
L47	N47°05'15"W	29.00'
L48	S2°05'15"E	6.00'
L49	S87°54'45"W	6.00'
L50	N2°05'15"W	6.00'
L51	N87°54'45"E	6.00'
L52	N47°05'15"W	14.37'
L53	N42°54'45"E	9.00'
L54	N47°05'15"W	16.00'
L55	N42°54'45"E	7.44'
L56	N11°54'15"W	32.94'
L57	N42°54'45"E	8.00'
L58	N42°54'45"E	8.00'
L59	N47°05'15"W	11.00'
L60	N47°05'15"W	11.00'
L61	N47°05'15"W	11.00'
L62	N47°05'15"W	11.00'

BC CURVE TABLE				
CURVE #	DELTA	RADIUS	LENGTH	TANGENT
C1	90°00'00"	2.50'	3.93'	2.50'
C2	36°43'47"	52.47'	33.64'	17.42'
C3	36°42'42"	8.00'	5.13'	2.65'
C4	90°00'00"	0.50'	0.79'	0.50'
C5	65°23'13"	2.00'	2.28'	1.28'
C6	102°58'22"	3.00'	5.39'	3.77'
C7	77°01'38"	27.50'	36.97'	21.89'
C8	45°09'04"	27.50'	21.67'	11.43'
C9	45°09'04"	20.00'	15.76'	8.32'
C10	90°00'00"	3.00'	4.71'	3.00'
C11	90°00'00"	3.00'	4.71'	3.00'
C12	41°27'00"	26.50'	19.17'	10.03'
C13	42°03'42"	26.50'	19.45'	10.19'
C14	42°56'18"	26.50'	19.86'	10.42'
C15	7°08'09"	250.00'	31.14'	15.59'
C16	5°52'09"	250.00'	25.61'	12.82'
C17	180°00'00"	4.00'	12.57'	INFINITY'
C18	19°09'52"	14.50'	4.85'	2.45'
C19	90°05'49"	2.50'	3.93'	2.50'
C20	121°25'13"	4.50'	9.54'	8.02'

BC CURVE TABLE				
CURVE #	DELTA	RADIUS	LENGTH	TANGENT
C21	115°01'13"	14.50'	29.11'	22.77'
C22	180°00'00"	4.00'	12.57'	INFINITY'
C23	180°00'00"	4.00'	12.57'	INFINITY'
C24	110°22'00"	0.50'	0.96'	0.72'
C25	104°46'52"	4.50'	8.23'	5.84'
C26	90°00'00"	2.50'	3.93'	2.50'
C27	180°00'00"	4.00'	12.57'	INFINITY'
C28	180°00'00"	4.00'	12.57'	INFINITY'
C29	90°00'00"	3.00'	4.71'	3.00'
C30	125°11'00"	5.00'	10.92'	9.64'
C31	144°49'00"	2.50'	6.32'	7.88'
C32	180°00'00"	4.00'	12.57'	INFINITY'
C33	180°00'00"	4.00'	12.57'	INFINITY'
C34	90°00'00"	3.00'	4.71'	3.00'
C35	119°33'02"	5.00'	10.43'	8.58'
C36	5°37'58"	225.00'	22.12'	11.07'
C37	144°49'00"	2.50'	6.32'	7.88'
C38	180°00'00"	4.00'	12.57'	INFINITY'
C39	180°00'00"	4.00'	12.57'	INFINITY'
C40	90°00'00"	3.00'	4.71'	3.00'

BC CURVE TABLE				
CURVE #	DELTA	RADIUS	LENGTH	TANGENT
C42	180°00'00"	4.00'	12.57'	INFINITY'
C43	180°00'00"	4.00'	12.57'	INFINITY'
C44	90°00'00"	3.00'	4.71'	3.00'
C45	126°27'00"	4.00'	8.83'	7.93'
C46	145°47'24"	2.50'	6.36'	8.12'
C47	180°00'00"	4.00'	12.57'	INFINITY'
C48	180°00'00"	4.00'	12.57'	INFINITY'
C49	90°00'00"	3.00'	4.71'	3.00'
C50	126°27'00"	5.00'	11.03'	9.91'
C51	143°33'00"	2.00'	5.01'	6.07'
C52	93°08'59"	3.00'	4.88'	3.17'
C53	93°20'19"	10.00'	16.29'	10.60'
C54	83°30'42"	5.00'	7.29'	4.46'
C55	90°00'00"	3.00'	4.71'	3.00'
C56	90°00'00"	3.00'	4.71'	3.00'
C57	138°33'00"	3.00'	7.25'	7.93'
C58	131°27'00"	3.00'	6.88'	6.65'
C59	135°09'04"	3.00'	7.08'	7.27'
C60	134°50'56"	5.00'	11.77'	12.03'
C61	104°28'39"	0.50'	0.91'	0.65'

BC LINE TABLE		
LINE #	DIRECTION	LENGTH
L63	S2°05'15"E	6.00'
L64	S87°54'45"W	6.00'
L65	N2°05'15"W	6.00'
L66	N87°54'45"E	6.00'
L67	N47°05'15"W	16.79'
L68	N42°54'45"E	9.00'
L69	N47°05'15"W	16.00'
L70	N42°54'45"E	7.85'
L71	S11°54'15"E	13.57'
L72	N47°05'15"W	29.00'
L73	N47°05'15"W	29.00'
L74	N42°54'45"E	6.17'
L75	N47°05'15"W	15.00'
L76	N47°05'15"W	29.00'
L77	N47°05'15"W	29.00'
L78	S2°05'15"E	6.00'
L79	S87°54'45"W	6.00'
L80	N2°05'15"W	6.00'
L81	N87°54'45"E	6.00'
L82	N47°05'15"W	16.62'

BC LINE TABLE		
LINE #	DIRECTION	LENGTH
L83	N42°54'45"E	9.00'
L84	N47°05'15"W	16.00'
L85	N42°54'45"E	11.73'
L86	S10°38'15"E	27.20'
L87	S2°05'15"E	6.00'
L88	S87°54'45"W	6.00'
L89	N2°05'15"W	6.00'
L90	N87°54'45"E	6.00'
L91	N47°05'15"W	29.00'
L92	N47°05'15"W	29.00'
L93	S2°05'15"E	6.00'
L94	S87°54'45"W	6.00'
L95	N2°05'15"W	6.00'
L96	N87°54'45"E	6.00'
L97	N47°05'15"W	14.79'
L98	N42°54'45"E	9.00'
L99	N47°05'15"W	16.00'
L100	N42°54'45"E	7.54'
L101	S10°38'15"E	33.58'
L102	N47°05'15"W	30.99'

BC LINE TABLE		
LINE #	DIRECTION	LENGTH
L103	S53°34'33"E	21.57'
L104	N42°54'45"E	2.15'
L105	N47°05'15"W	13.01'
L106	S42°54'45"W	18.00'
L107	N47°05'15"W	16.00'
L108	S42°54'45"W	14.84'
L109	N84°21'45"E	43.82'
L110	S2°05'15"E	6.00'
L111	S87°54'45"W	6.00'
L112	N2°05'15"W	6.00'
L113	N87°54'45"E	6.00'
L114	N47°05'15"W	16.00'
L115	S42°54'45"W	18.00'
L116	N47°05'15"W	15.28'
L117	N2°14'18"W	39.31'
L118	S42°54'45"W	8.30'
L120	S42°54'45"W	13.67'
L121	S47°05'15"E	4.00'
L122	N42°54'45"E	1.17'
L123	N47°05'15"W	2.33'

BC CURVE TABLE				
CURVE #	DELTA	RADIUS	LENGTH	TANGENT
C62	75°31'21"	2.50'	3.30'	1.94'
C63	90°00'00"	3.00'	4.71'	3.00'
C64	89°58'51"	3.00'	4.71'	3.00'
C65	41°22'25"	27.49'	19.85'	10.38'
C66	54°51'07"	2.50'	2.39'	1.30'

BC LINE TABLE		
LINE #	DIRECTION	LENGTH
L124	S42°54'45"W	1.17'
L125	N47°05'15"W	2.33'
L126	S47°05'15"E	2.83'
L127	N42°54'45"E	0.67'
L128	S42°54'46"W	11.00'
L129	N47°05'14"W	9.44'
L132	S42°54'45"W	80.77'
L133	S47°05'15"E	16.00'
L134	N42°54'11"E	16.00'
L135	N42°54'46"E	0.43'

BASIS OF BEARINGS

NORTH 05°36'32" WEST BEING THE BEARING OF THE WEST LINE OF THE NORTHWEST QUARTER (NW 1/4) OF SECTION 33, TOWNSHIP 20 SOUTH, RANGE 59 EAST, M.D.M. AS SHOWN IN BOOK 149, PAGE 46 PLATS ON FILE AT THE CLARK COUNTY, NEVADA RECORDER'S OFFICE.

BENCHMARK

DESCRIPTION	NAVD 88 DATUM	NAVD 88 DATUM
CITY OF LAS VEGAS VERTICAL CONTROL POINT "D368", BEING A USC&GS DISC SET IN ROCK SOUTH OF CHARLESTON BLVD & WEST OF DEENTION BASIN.	3246.63 (FEET)	989.574 (METERS)
CITY OF LAS VEGAS VERTICAL CONTROL 2008 AND ADJUSTMENT (UPDATED 05/24/2010) BASED ON NORTH AMERICAN VERTICAL DATUM OF 1988 (NAVD'88).		

Call before you Dig
Avoid cutting underground utility lines. It's costly.
Call 811
or
1-800-227-2600
and
CLARK COUNTY TRAFFIC OPERATIONS
1-702-455-6000

AVOID HITTING OVERHEAD POWER LINES. IT'S COSTLY
CALL BEFORE YOU DO OVERHEAD
1-702-227-2929

FAST
Call before you UnderGround
1-702-432-5300
FREEWAY AND ARTERIAL SYSTEM OF TRANSPORTATION

199
L17-01470 715-~~186~~

STATE OF NEVADA
PROFESSIONAL ENGINEER
Exp. 12/31/2018
No. 8334
DATE: 1/5/18

REV	DATE	DESCRIPTION	DATE	AGEN APP	DATE	GOV APP

PROJECT NO. 889-002
DESIGN:
DRAWN:
CHECK:
PLOT DATE: 01-02-18
PLOT TIME: 17:27:49

GCW
ENGINEERS \ SURVEYORS
1555 S. RAINBOW BLVD.
LAS VEGAS, NV 89146
T: 702.804.2000
F: 702.804.2299
gcwengineering.com

F:\Projects\800\889-002\DWG\Production\PHASE-II\P2-889-002_C3.1_HRZ.dwg
Daniel Lee

CA LAS VEGAS SVD, LLC

DORAL ACADEMY
RED ROCK CAMPUS HIGH SCHOOL

HORIZONTAL CONTROL CURB DATA TABLES

DRAWING
C3.3
6 OF 13 SHTS

H: / CLV: L17-01470

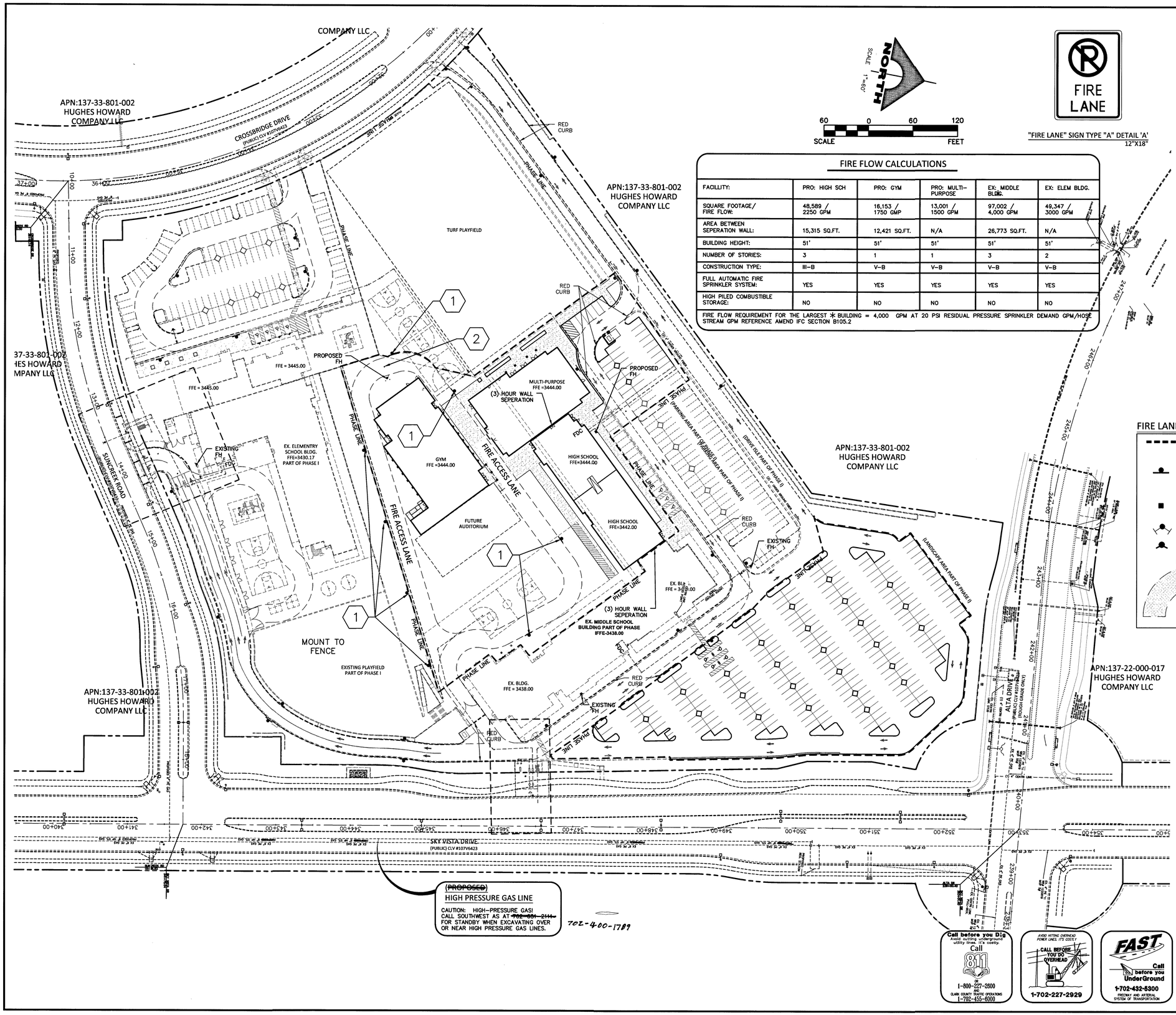

NORTH
SCALE 1"=60'

60 0 60 120
SCALE FEET

FIRE LANE

"FIRE LANE" SIGN TYPE "A" DETAIL 'A'
12"X18"

FIRE FLOW CALCULATIONS

FACILLITY:	PRO: HIGH SCH	PRO: GYM	PRO: MULTI-PURPOSE	EX: MIDDLE BLDG.	EX: ELEM BLDG.
SQUARE FOOTAGE/ FIRE FLOW:	48,589 / 2250 GPM	16,153 / 1750 GMP	13,001 / 1500 GPM	97,002 / 4,000 GPM	49,347 / 3000 GPM
AREA BETWEEN SEPERATION WALL:	15,315 SQ.FT.	12,421 SQ.FT.	N/A	26,773 SQ.FT.	N/A
BUILDING HEIGHT:	51'	51'	51'	51'	51'
NUMBER OF STORIES:	3	1	1	3	2
CONSTRUCTION TYPE:	III-B	V-B	V-B	V-B	V-B
FULL AUTOMATIC FIRE SPRINKLER SYSTEM:	YES	YES	YES	YES	YES
HIGH PILED COMBUSTIBLE STORAGE:	NO	NO	NO	NO	NO

FIRE FLOW REQUIREMENT FOR THE LARGEST * BUILDING = 4,000 GPM AT 20 PSI RESIDUAL PRESSURE SPRINKLER DEMAND GPM/HOSE STREAM GPM REFERENCE AMEND IFC SECTION B105.2

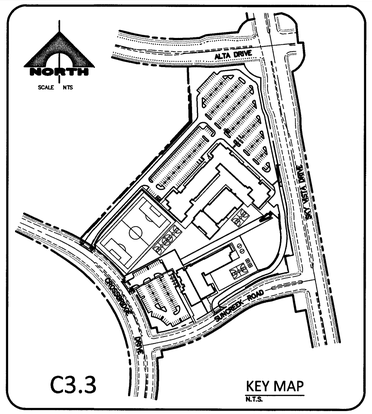

SIGNAGE CONSTRUCTION NOTES

NO.	ITEM USDCCA: UNIFORM STANDARD DRAWINGS CLARK COUNTY AREA.
1	INSTALL "FIRE LANE" SIGNS PER DETAIL 'A' THIS SHEET.
2	INSTALL "FIRE HYDRANT BLUE REFLECTOR" PER CITY OF LAS VEGAS FIRE DEPARTMENT GUIDELINES.

FIRE LANE LEGEND

- INDICATES RED PAINTED CURB WITH "NO PARKING FIRE LANE" PAINTED EVERY 100 FT. PER CITY OF LAS VEGAS FIRE PREVENTION DIVISION GUIDELINES. (TYPE "C")
- INDICATES PROPOSED LOCATION OF FIRE LANE SIGNS (DETAIL "A" HEREON) TO BE PLACED AT EVERY ENTRANCE STATING "FIRE LANE". FIRE LANE SIGNS SHALL CONFORM TO CITY OF LAS VEGAS FIRE PREVENTION DIVISION GUIDELINES.
- INDICATES PROPOSED LOCATION OF BLUE FIRE HYDRANT REFLECTIVE MARKER PER CITY OF LAS VEGAS FIRE PREVENTION DIVISION GUIDELINES.
- FIRE PREVENTION DIVISION CONNECTION
- PAINT PRIVATE FIRE HYDRANTS RED PER CITY OF LAS VEGAS FIRE PREVENTION DIVISION GUIDELINES.
- R=52' (MIN), R=28' (MIN), 24' (TYP.) — INDICATES 24' MINIMUM WIDTH FIRE LANE AND TYPICAL TURNING RADIUS PER CITY OF LAS VEGAS FIRE PREVENTION DIVISION GUIDELINES. PAVEMENT SECTION WILL BE HEAVY DUTY TRUCK SECTION PER DETAIL "F" SHEET C8.3.

APPROVALS

LAS VEGAS FIRE & RESCUE — DATE 12/21/17

BASIS OF BEARINGS

NORTH 05°36'32" WEST BEING THE BEARING OF THE WEST LINE OF THE NORTHWEST QUARTER (NW 1/4) OF SECTION 33, TOWNSHIP 20 SOUTH, RANGE 59 EAST, M.D.M. AS SHOWN IN BOOK 149, PAGE 46 PLATS ON FILE AT THE CLARK COUNTY, NEVADA RECORDER'S OFFICE.

BENCHMARK

DESCRIPTION	NAVD 88 DATUM	NAVD 88 DATUM
CITY OF LAS VEGAS VERTICAL CONTROL POINT "D368", BEING A USC&GS DISC SET IN ROCK SOUTH OF CHARLESTON BLVD & WEST OF DEENTION BASIN. CITY OF LAS VEGAS VERTICAL CONTROL 2008 AND ADJUSTMENT (UPDATED 05/24/2010) BASED ON NORTH AMERICAN VERTICAL DATUM OF 1988 (NAVD'88).	3248.63 (FEET)	989.574 (METERS)

L17-01470 715-199

STATE OF NEVADA PROFESSIONAL ENGINEER ROY D. CLARK Exp. 12/31/2018 CIVIL No. 15334 DATE 12/21/17

REV	DATE	DESCRIPTION	DATE	AGEN APP	DATE	GOV APP

PROJECT NO. 889-002
DESIGN:
DRAWN:
CHECK:
PLOT DATE 12-21-17
PLOT TIME 09:29:43

GCV ENGINEERS \ SURVEYORS
1555 S. RAINBOW BLVD.
LAS VEGAS, NV 89146
T: 702.804.2000
F: 702.804.2299
gcvengineering.com

F:\Projects\800\889-002\DWG\Production\PHASE-II\P2-889-002_C3.7_FA.dwg
Daniel Lee

CA LAS VEGAS SVD, LLC

DORAL ACADEMY
RED ROCK CAMPUS HIGH SCHOOL

FIRE ACCESS PLAN

DRAWING
C3.4
7 OF 13 SHTS

H: / CLV: L17-01470

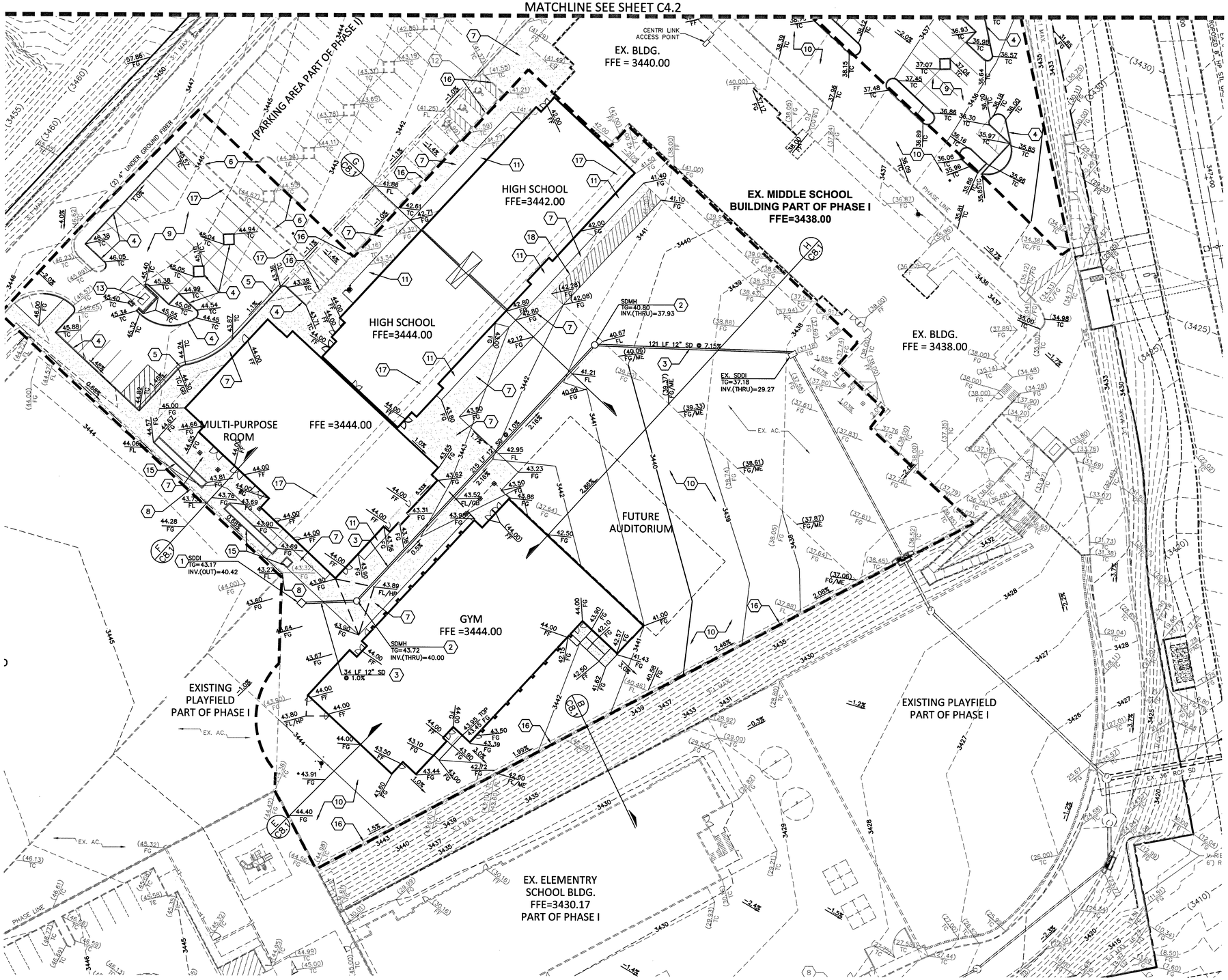

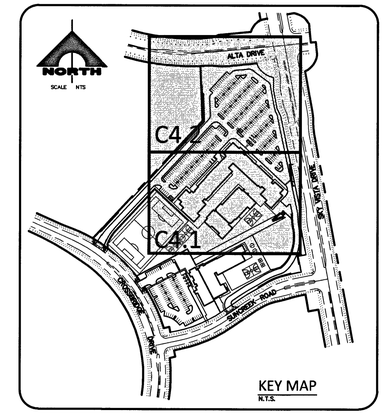

STORM DRAIN CONSTRUCTION NOTES

NO.	ITEM
1	INSTALL NDOT TYPE 2 DROP INLET, (A=2.5') PER NDOT STD. DWG. NO. R-4.2.1.
2	INSTALL 48"ø TYPE I STORM DRAIN MANHOLE PER USDCCA DWG. NO. 403
3	INSTALL 12" PVC STORM DRAIN PIPE PER UDACS TRENCH DETAIL PLATE NO. 16 AND 17.

GRADING CONSTRUCTION NOTES

NO.	ITEM USDCCA: UNIFORM STANDARD DRAWINGS CLARK COUNTY AREA
4	INSTALL "A" CURB PER DETAIL 'A' SHEET C8.2
5	INSTALL "L" CURB PER USDCCA STD. DWG. 216
6	EXISTING CURB TO BE REMOVED.
7	CONSTRUCT 4" THICK SIDEWALK PER USDCCA STD. DWG. 234
8	EXISTING 3' CONCRETE VALLEY GUTTER PROTECT IN PLACE. ADJUST EXISTING FLOW LINE INVERT ELEVATION TO MATCH INVERT ELEVATION SHOWN ON PLAN.
9	CONSTRUCT 2" AC PAVEMENT OVER 5" TYPE II AGGREGATE BASE (CAR)PER DETAIL "E" SHEET C8.2
10	CONSTRUCT 3" AC PAVEMENT OVER 5.5" TYPE II AGGREGATE BASE (TRUCK) PER DETAIL "F" SHEET C8.2
11	LANDSCAPE AREA. SEE LANDSCAPE PLANS FOR DETAILS
12	INSTALL 3' WIDE VALLEY GUTTER PER DETAIL "B" SHEET C8.02.
13	TRASH ENCLOSURE SEE ARCHITECTURAL PLANS.
14	NOT USED.
15	INSTALL PLANTERS SEE ARCHITECTURAL PLANS.
16	EXISTING CURB, PROTECT IN PLACE.
17	EXISTING SIDEWALK TO BE REMOVED.
18	EXISTING ASPHALT AREA WITHIN THE NEW CONCRETE SIDEWALK AREA TO BE REMOVED.

NOTE:

* – ALL ONSITE STORM DRAIN SYSTEMS AND ASSOCIATED FACILITIES ARE PRIVATELY OWNED AND TO BE PRIVATELY MAINTAINED BY DORAL ACADEMY.
* – FOR THE CONSTRUCTION OF ALL STORM DROP INLETS PER NEWLY ADOPTED USDCCA DRAWING NO. 421 (STORM QUALITY MANAGEMENT STAMP AND SIGN DETAIL)

DRAINAGE CERTIFICATION

I CERTIFY THAT THE GRADING PLANS ARE IN CONFORMANCE WITH THE APPROVED DRAINAGE STUDY DS-4755A ON FILE AT THE CITY OF LAS VEGAS FOR THIS PROJECT.

ROY D. CLARK P.E. 8354 — DATE 1/3/18

BASIS OF BEARINGS

NORTH 05°36'32" WEST BEING THE BEARING OF THE WEST LINE OF THE NORTHWEST QUARTER (NW 1/4) OF SECTION 33, TOWNSHIP 20 SOUTH, RANGE 59 EAST, M.D.M. AS SHOWN IN BOOK 149, PAGE 46 PLATS ON FILE AT THE CLARK COUNTY, NEVADA RECORDER'S OFFICE.

BENCHMARK

DESCRIPTION	NAVD 88 DATUM	NAVD 88 DATUM
CITY OF LAS VEGAS VERTICAL CONTROL POINT "D368", BEING A USC&GS DISC SET IN ROCK SOUTH OF CHARLESTON BLVD & WEST OF DEENTION BASIN.	3246.63 (FEET)	989.574 (METERS)
CITY OF LAS VEGAS VERTICAL CONTROL 2008 AND ADJUSTMENT (UPDATED 05/24/2010) BASED ON NORTH AMERICAN VERTICAL DATUM OF 1988 (NAVD'88).		

Call before you Dig
Avoid cutting underground utility lines. It's costly.
Call 811
1-800-227-2600
AND
CLARK COUNTY TRAFFIC OPERATIONS
1-702-455-6000

AVOID HITTING OVERHEAD POWER LINES. IT'S COSTLY.
CALL BEFORE YOU DO OVERHEAD
1-702-227-2929

FAST
Call before you UnderGround
1-702-432-5300
FREEWAY AND ARTERIAL SYSTEM OF TRANSPORTATION

199
L17-01470 715-E86

STATE OF NEVADA
ROY D. CLARK
No. 8354
PROFESSIONAL ENGINEER
Exp. 12/31/2019
CIVIL

REV	DATE	DESCRIPTION	DATE	AGEN APP	DATE	CCW APP	DATE

1/3/18

PROJECT NO. 889-002
DESIGN:
DRAWN:
CHECK:
PLOT DATE: 01-02-18
PLOT TIME: 17:39:21

GCW
1555 S. RAINBOW BLVD.
LAS VEGAS, NV 89146
T: 702.804.2000
F: 702.804.2299
gcweng inneering.com
ENGINEERS SURVEYORS

F:\Projects\800\889-002\DWG\Production\PHASE-II\P2-889-002_GC4.1_GRADING.dwg
Daniel Lee

CA LAS VEGAS SVD, LLC
DORAL ACADEMY
RED ROCK CAMPUS HIGH SCHOOL
GRADING PLAN I

DRAWING
C4.1
8 OF 13 SHTS

H: / CLV: L17-01470

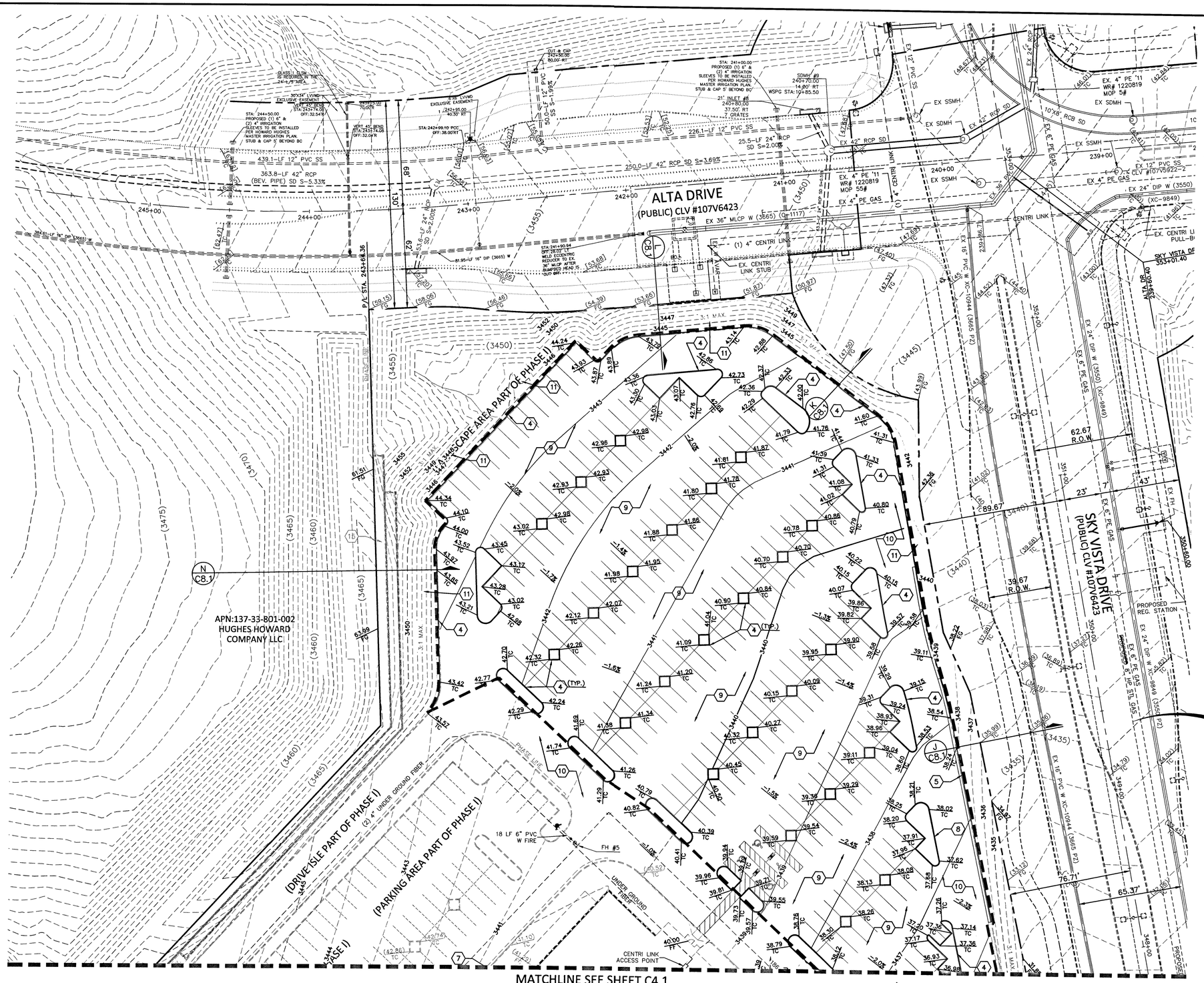

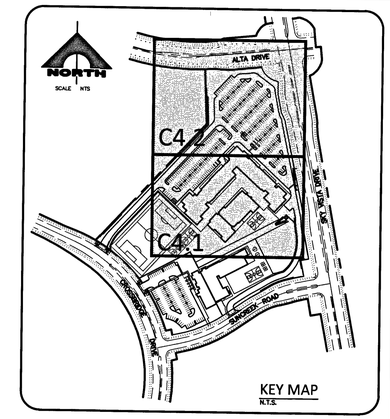

STORM DRAIN CONSTRUCTION NOTES

NO.	ITEM
1	INSTALL NDOT TYPE 2 DROP INLET, (A=2.5') PER NDOT STD. DWG. NO. R-4.2.1.
2	INSTALL 48"ø TYPE I STORM DRAIN MANHOLE PER USDCCA DWG. NO. 403
3	INSTALL 12" PVC STORM DRAIN PIPE PER UDACS TRENCH DETAIL PLATE NO. 16 AND 17.

GRADING CONSTRUCTION NOTES

NO.	ITEM USDCCA: UNIFORM STANDARD DRAWINGS CLARK COUNTY AREA
4	INSTALL "A" CURB PER DETAIL 'A' SHEET C8.2
5	INSTALL "L" CURB PER USDCCA STD. DWG. 216
6	EXISTING CURB TO BE REMOVED.
7	CONSTRUCT 4" THICK SIDEWALK PER USDCCA STD. DWG. 234
8	EXISTING 3' CONCRETE VALLEY GUTTER PROTECT IN PLACE. ADJUST EXISTING FLOW LINE INVERT ELEVATION TO MATCH INVERT ELEVATION SHOWN ON PLAN.
9	CONSTRUCT 2" AC PAVEMENT OVER 5" TYPE II AGGREGATE BASE (CAR)PER DETAIL 'F' SHEET C8.2
10	CONSTRUCT 3" AC PAVEMENT OVER 5.5" TYPE II AGGREGATE BASE (TRUCK) PER DETAIL 'F' SHEET C8.2
11	LANDSCAPE AREA. SEE LANDSCAPE PLANS FOR DETAILS
12	INSTALL 3' WIDE VALLEY GUTTER PER DETAIL "B" SHEET C8.02.
13	TRASH ENCLOSURE SEE ARCHITECTURAL PLANS.
14	NOT USED.
15	INSTALL PLANTERS SEE ARCHITECTURAL PLANS.
16	EXISTING CURB, PROTECT IN PLACE.
17	EXISTING SIDEWALK TO BE REMOVED.
18	EXISTING ASPHALT AREA WITHIN THE NEW CONCRETE SIDEWALK AREA TO BE REMOVED.

~~(PROPOSED)~~
HIGH PRESSURE GAS LINE

CAUTION: HIGH-PRESSURE GAS! CALL SOUTHWEST AS AT 702-651-2111 FOR STANDBY WHEN EXCAVATING OVER OR NEAR HIGH PRESSURE GAS LINES.

NOTE:
ALL ONSITE STORM DRAIN SYSTEMS AND ASSOCIATED FACILITIES ARE PRIVATELY OWNED AND TO BE PRIVATELY MAINTAINED BY DORAL ACADEMY.

DRAINAGE CERTIFICATION

I CERTIFY THAT THE GRADING PLANS ARE IN CONFORMANCE WITH THE APPROVED DRAINAGE STUDY DS-4755A ON FILE AT THE CITY OF LAS VEGAS FOR THIS PROJECT.

ROY D. CLARK P.E. 8354 — DATE 1/3/18

BASIS OF BEARINGS

NORTH 05°36'32" WEST BEING THE BEARING OF THE WEST LINE OF THE NORTHWEST QUARTER (NW 1/4) OF SECTION 33, TOWNSHIP 20 SOUTH, RANGE 59 EAST, M.D.M. AS SHOWN IN BOOK 149, PAGE 48 PLATS ON FILE AT THE CLARK COUNTY, NEVADA RECORDER'S OFFICE.

BENCHMARK

DESCRIPTION	NAVD 88 DATUM	NAVD 88 DATUM
CITY OF LAS VEGAS VERTICAL CONTROL POINT "D368", BEING A USCAGS DISC SET IN ROCK SOUTH OF CHARLESTON BLVD & WEST OF DEENTION BASIN.	3246.63 (FEET)	989.574 (METERS)
CITY OF LAS VEGAS VERTICAL CONTROL 2008 AND ADJUSTMENT (UPDATED 05/24/2010) BASED ON NORTH AMERICAN VERTICAL DATUM OF 1988 (NAVD'88).		

NORTH
30 0 30 60
SCALE FEET

Call before you Dig
Avoid cutting underground utility lines. It's costly.
Call 811
OR
1-800-227-2600
AND
CLARK COUNTY TRAFFIC OPERATIONS
1-702-455-6000

AVOID HITTING OVERHEAD POWER LINES. IT'S COSTLY
CALL BEFORE YOU DO OVERHEAD
1-702-227-2929

FAST
Call before you UnderGround
1-702-432-6300
FREEWAY AND ARTERIAL SYSTEM OF TRANSPORTATION

STATE OF NEVADA
ROY D. CLARK
Exp. 12/31/2018
CIVIL
No. 8354
PROFESSIONAL ENGINEER
DATE: 1/3/18

REV	DATE	DESCRIPTION	DATE	AGEN APP	DATE	CCW APP

PROJECT NO. 889-002
DESIGN:
DRAWN:
CHECK:
PLOT DATE: 01-02-18
PLOT TIME: 17:40:26

GCW
ENGINEERS \ SURVEYORS
1555 S. RAINBOW BLVD.
LAS VEGAS, NV 89146
T: 702.804.2000
F: 702.804.2299
gcwengineering.com

F:\Projects\800\889-002\DWG\Production\PHASE-II\P2-889-002_GC4.1.DWG
Daniel Lee

CA LAS VEGAS SVD, LLC
DORAL ACADEMY
RED ROCK CAMPUS HIGH SCHOOL
GRADING PLAN II

DRAWING
C4.2
9 OF 13 SHTS

199
L17-01470 715-~~186~~

H: / CLV: L17-01470

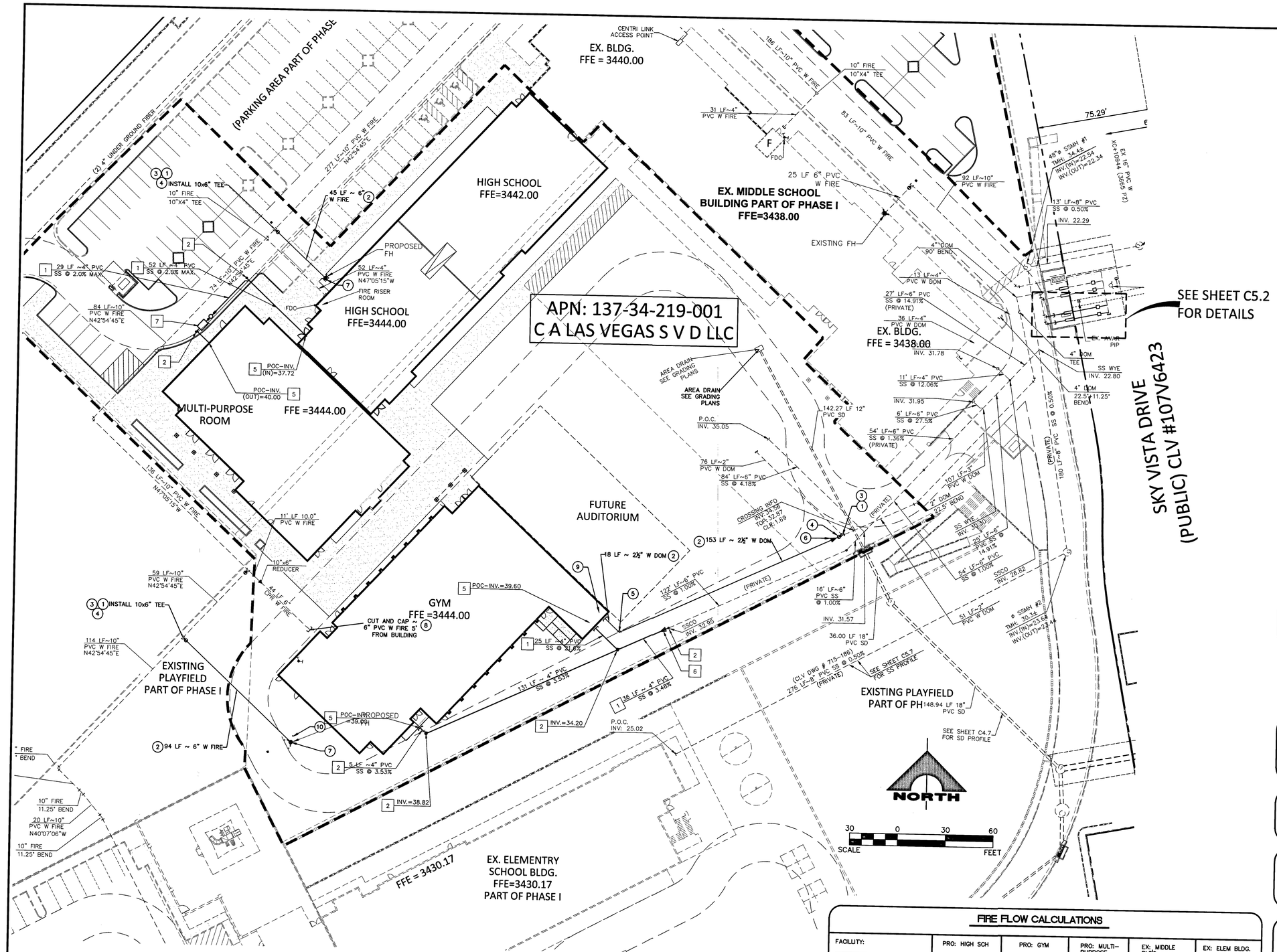

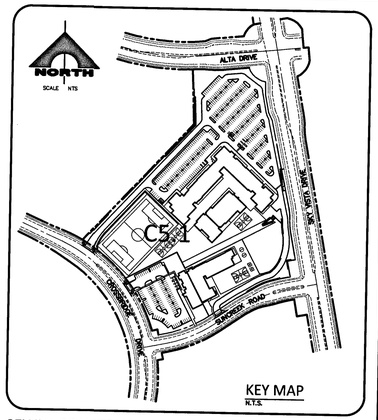

SEWER CONSTRUCTION NOTES

NO.	ITEM
	DCSWCS: DESIGN AND CONSTRUCTION STANDARDS FOR WASTEWATER COLLECTION SYSTEMS
1	INSTALL PVC SEWER LINE (SDR-35) PER DCSWCS DWG. NO. SD-17 (PAVED AREAS) AND SD-16 (UNPAVED AREAS) (SEE PLAN FOR SIZES)
2	INSTALL CLEAN OUT WITH TRAFFIC BEARING COVER PER DCSWCS DWG. NO. SD-26 AND DETAIL 'N' SHEET C8.2
3	INSTALL WYE PER DCSWCS DWG. NO. SD-22 AND DETAIL 'F' SHEET C8.2
4	CONNECT TO EXISTING PRIVATE SEWER MAIN.
5	POINT OF CONNECTION. SEE PLUMBING PLANS FOR CONTINUATION.
6	INSTALL SDR-35 4"x6" CONCENTRIC REDUCER COUPLING.
7	INSTALL 450 GALLON GREASE INTERCEPTOR. SEE PLUMBING PLANS FOR DETAILS.

WATER CONSTRUCTION NOTES (PRIVATE)

NO.	ITEM
	UDACS: PLATE NO. PER UNIFORM DESIGN AND CONSTRUCTION STANDARDS FOR WATER DISTRIBUTION SYSTEMS
1	CONNECT TO EXISITING WATER LINE, SEE PLAN FOR SIZE.
2	INSTALL PVC WATER LINE, PER UDACS PLATE NO. 17 (SEE PLAN FOR SIZES)
3	INSTALL TEE PER UDACS PLATE NO. 31 (SAME SIZE AS CONNECTING LINES)
4	INSTALL GATE VALVE PER UDACS PLATE NO. 30 & 39 (SAME SIZE AS LINE)
5	INSTALL BEND PER UDACS PLATE NO. 31 (SEE PLAN FOR ANGEL)
6	INSTALL INCREASER/REDUCER (SAME SIZE AS CONNECTING LINES) PER UDACS PLATE NO. 30
7	INSTALL FIRE HYDRANT ASSEMBLY PER UDACS PLATE NO. 40
8	INSTALL CAP PER UDACS PLT. NO. 36 (SAME SIZE AS LINE)
9	POINT OF CONNECTION. SEE PLUMBING PLANS FOR CONTINUATION.
10	INSTALL BOLLARDS PER UDACS PLATE NO. 75.

APPROVED FOR CONSTRUCTION

LAS VEGAS VALLEY WATER DISTRICT ENGINEERING SERVICES

PROJECT No. 125994 FIRST APPROVED DATE: 1/11/18

LVVWD APPROVED FIRE FLOW 4000 GPM AT 20 PSI RESIDUAL

DISCLAIMER NOTES

UTILITY LOCATIONS SHOWN HEREON ARE APPROXIMATE ONLY. IT SHALL BE THE CONTRACTOR'S RESPONSIBILITY TO DETERMINE THE EXACT HORIZONTAL AND VERTICAL LOCATION OF ALL EXISTING UNDERGROUND AND OVERHEAD UTILITIES PRIOR TO COMMENCING CONSTRUCTION. NO REPRESENTATION IS MADE THAT ALL EXISTING UTILITIES ARE SHOWN HEREON. THE ENGINEER ASSUMES NO RESPONSIBILITY FOR UTILITIES NOT SHOWN OR UTILITIES NOT SHOWN IN THEIR PROPER LOCATION

APPROVALS

LAS VEGAS FIRE & RESCUE — DATE 12/21/17

THIS PROPERTY MAY HAVE STATIC PRESSURE IN EXCESS OF 80 psi. THE UNIFORM PLUMBING CODE REQUIRES THAT INDIVIDUAL, ON-SITE (PRIVATE), PRESSURE REDUCING VALVES BE INSTALLED WHENEVER THE PRESSURE EXCEEDS 80 psi. PRV's ARE THE DEVELOPERS RESPONSIBILITY, AND WILL NOT BE INSPECTED OR INCLUDED IN THE ACCEPTANCE OF LVVWD FACILITIES.

BASIS OF BEARINGS

NORTH 05°36'32" WEST BEING THE BEARING OF THE WEST LINE OF THE NORTHWEST QUARTER (NW 1/4) OF SECTION 33, TOWNSHIP 20 SOUTH, RANGE 59 EAST, M.D.M. AS SHOWN IN BOOK 149, PAGE 46 PLATS ON FILE AT THE CLARK COUNTY, NEVADA RECORDER'S OFFICE.

BENCHMARK

DESCRIPTION	NAVD 88 DATUM	NAVD 88 DATUM
CITY OF LAS VEGAS VERTICAL CONTROL POINT "D368", BEING A USC&GS DISC SET IN ROCK SOUTH OF CHARLESTON BLVD & WEST OF DEENTION BASIN.	3246.63 (FEET)	989.574 (METERS)
CITY OF LAS VEGAS VERTICAL CONTROL 2008 AND ADJUSTMENT (UPDATED 05/24/2010) BASED ON NORTH AMERICAN VERTICAL DATUM OF 1988 (NAVD'88).		

FIRE FLOW CALCULATIONS

FACILITY:	PRO: HIGH SCH	PRO: GYM	PRO: MULTI-PURPOSE	EX: MIDDLE BLDG.	EX: ELEM BLDG.
SQUARE FOOTAGE/ FIRE FLOW:	48,589 / 2250 GPM	16,153 / 1750 GMP	13,001 / 1500 GPM	97,002 / 4,000 GPM	49,347 / 3000 GPM
AREA BETWEEN SEPERATION WALL:	15,315 SQ.FT.	12,421 SQ.FT.	N/A	26,773 SQ.FT.	N/A
BUILDING HEIGHT:	51'	51'	51'	51'	51'
NUMBER OF STORIES:	3	1	1	3	2
CONSTRUCTION TYPE:	III-B	V-B	V-B	V-B	V-B
FULL AUTOMATIC FIRE SPRINKLER SYSTEM:	YES	YES	YES	YES	YES
HIGH PILED COMBUSTIBLE STORAGE:	NO	NO	NO	NO	NO

FIRE FLOW REQUIREMENT FOR THE LARGEST * BUILDING = 4,000 GPM AT 20 PSI RESIDUAL PRESSURE SPRINKLER DEMAND GPM/HOSE STREAM GPM REFERENCE AMEND IFC SECTION B105.2

SEE DWG C3.4 FOR FIRE WALL LOCATIONS

L17-01470 715-~~180~~ 199

STATE OF NEVADA PROFESSIONAL ENGINEER — ROY C. CLARK — Exp. 12/31/2018 — CIVIL — No. 8354 — DATE: 12/19/17

REV	DATE	DESCRIPTION	DRN	APP	DATE	AGEN APP	DATE	GCW APP	DATE

PROJECT NO. 889-002

DESIGN:
DRAWN:
CHECK:
PLOT DATE: 12-19-17
PLOT TIME: 16:38:15

GCW ENGINEERS\SURVEYORS
1555 S. RAINBOW BLVD.
LAS VEGAS, NV 89146
T: 702.804.2000
F: 702.804.2299
gcwengineering.com

F:\Projects\800\889-002\DWG\Production\PHASE-II\P2-889-002_C05.1_UTIL.dwg
Daniel Lee

CA LAS VEGAS SVD, LLC

DORAL ACADEMY
RED ROCK CAMPUS HIGH SCHOOL

UTILITY PLAN I

DRAWING
C5.1
10 OF 13 SHTS

PROJ#:125994 AGREE#:116643 QS:137-34-NW

H: / CLV: L17-01470

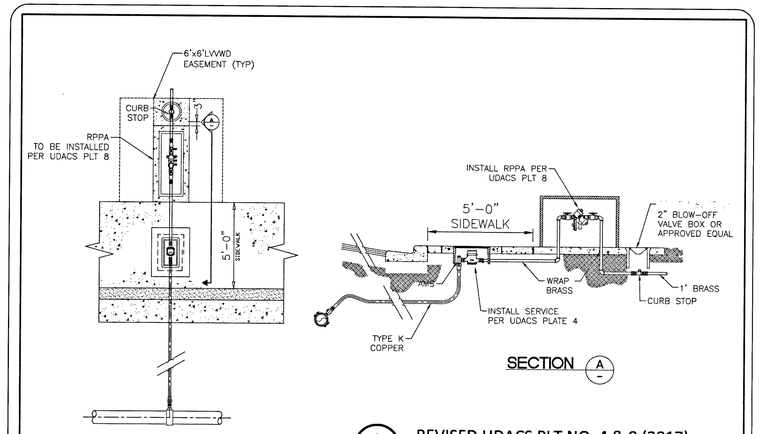

A — REVISED UDACS PLT NO. 4 & 8 (2017)

SCALE = NTS

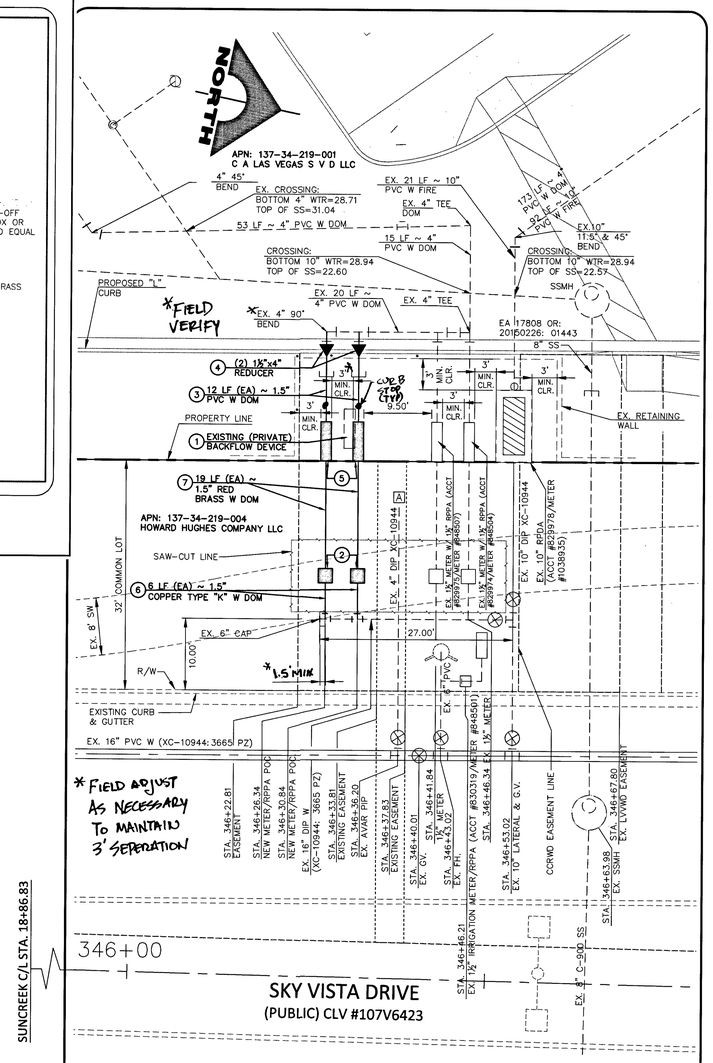

B — SKY VISTA DRIVE WATER CONNECTION DETAIL

SCALE: 1"=10'-0"

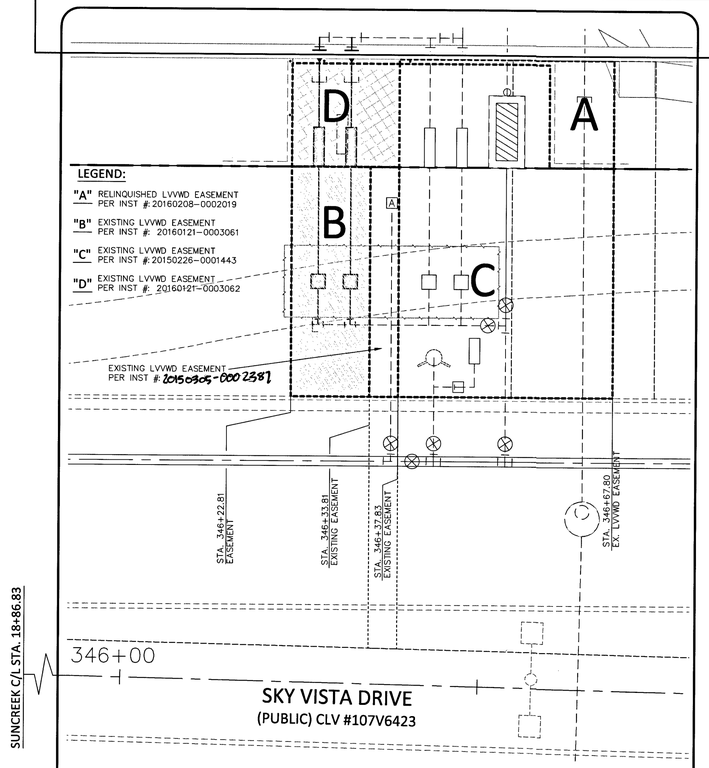

C — LVVWD EASEMENT ILLUSTRATION DETAIL

SCALE: 1"=10'-0"

10 0 10 20
SCALE FEET

SEWER CONNECTION NOTE:

ONE OR MORE SEGMENTS OF THE DOWNSTREAM SEWER SYSTEM THAT WILL SERVE THIS PROJECT HAS NOT BEEN COMPLETED OR ACCEPTED FOR MAINTENANCE BY THE CITY OF LAS VEGAS. ANY WORK DONE ON THIS PROJECT PRIOR TO THE COMPLETION AND/OR ACCEPTANCE OF THE DOWNSTREAM SEWER SYSTEM(S) SHALL BE DONE AT THE DEVELOPER'S OWN RISK. THE CITY OF LAS VEGAS RESERVES THE RIGHT TO PREVENT THE PHYSICAL CONNECTION OF THIS PROJECT TO THE DOWNSTREAM SEWER SYSTEM UNTIL ALL SEGMENTS HAVE BEEN COMPLETED AND ACCEPTED FOR MAINTENANCE, OR UNTIL SUCH TIME AS THEY ARE DEEMED AVAILABLE FOR SERVICE.

REDUCED PRESSURE PRINCIPLE ASSEMBLY (2) 1½"

Approved Reduced Pressure Principle Assembly (s) shall be installed per the UDACS Plate No. 8. No water shall be taken from a service requiring backflow prevention until the reduced pressure principle assembly has been successfully tested by LVVWD. Any block wall or other fence material shall be designed and constructed around the outside of the easement(s) to allow the District direct access from the adjacent right-of-way. Easements shall be clearly marked or staked prior to the start of construction.

Call before you Dig
Avoid cutting underground utility lines. It's costly.
Call
811
OR
1-800-227-2600
AND
CLARK COUNTY TRAFFIC OPERATIONS
1-702-455-6000

AVOID HITTING OVERHEAD POWER LINES. IT'S COSTLY.
CALL BEFORE YOU DO OVERHEAD
1-702-227-2929

FAST
Call before you UnderGround
1-702-432-5300
FREEWAY AND ARTERIAL SYSTEM OF TRANSPORTATION

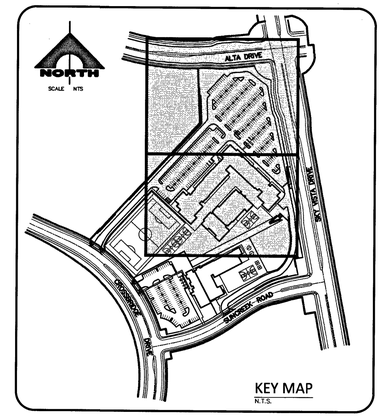

KEY MAP
N.T.S.

SEWER CONSTRUCTION NOTES

NO.	ITEM
	DCSWCS: DESIGN AND CONSTRUCTION STANDARDS FOR WASTEWATER COLLECTION SYSTEMS
1	INSTALL PVC SEWER LINE (SDR-35) PER DCSWCS DWG. NO. SD-17 (PAVED AREAS) AND SD-16 (UNPAVED AREAS) (SEE PLAN FOR SIZES)
2	INSTALL SEWER MANHOLE PER DCSWCS DWG. NO. SD-1A, 1B & 4.
3	INSTALL CLEAN OUT WITH TRAFFIC BEARING COVER PER DCSWCS DWG. NO. SD-26 AND DETAIL 'N' SHEET C8.2
4	INSTALL 750 GALLON GREASE INTERCEPTOR.
5	INSTALL WYE PER DCSWCS DWG. NO. SD-22 AND DETAIL 'F' SHEET C8.2
6	CONNECT TO EXISTING PRIVATE SEWER MAIN.
7	POINT OF CONNECTION. SEE PLUMBING PLANS FOR CONTINUATION.

WATER CONSTRUCTION NOTES

NO.	ITEM
	UDACS: PLATE NO. PER UNIFORM DESIGN AND CONSTRUCTION STANDARDS FOR WATER DISTRIBUTION SYSTEMS
1	THE EXISTING (PRIVATE) BACKFLOW DEVICE SHOWN WITHIN THE LVVWD EASEMENT IS BE REMOVED.
2	INSTALL 1-1/2" WATER METER, SERVICE SADDLE AND CORP. STOP PER UDACS PLATE NO. 4
3	INSTALL PVC WATER LINE (C-900) FOR LINE DIAMETERS LARGER THAN 6", PER UDACS PLATE NO. 17 (SEE PLAN FOR SIZES)
4	INSTALL REDUCER (SAME SIZE AS CONNECTING LINES) PER UDACS PLATE NO. 30
5	INSTALL 1-1/2" RPPA PER UDACS PLATE NO. 8 (BRASS LINE BETWEEN METER AND RPPA.) AND DETAIL A
6	INSTALL COPPER TYPE "K" WATER LINE PER UDACS PLATE NO. 4.
7	INSTALL RED BRASS WATER LINE PER UDACS PLATE NO. 8.

APPROVED FOR CONSTRUCTION

LAS VEGAS VALLEY WATER DISTRICT ENGINEERING SERVICES

PROJECT No. 125994 FIRST APPROVED DATE: 1/11/18
LVVWD APPROVED FIRE FLOW 4000 GPM AT 20 PSI RESIDUAL

TO ENSURE LVVWD ACCESS WITHIN EASEMENT

ALL ABOVE GROUND OBSTRUCTIONS INCLUDING BUT NOT LIMITED TO, LANDSCAPE BOULDERS, FENCES/WALLS, AND SIGNS ARE STRICTLY PROHIBITED WITHIN EASEMENT.

PROTECT IN PLACE AND ADJUST LVVWD EXISTING FACILITIES TO FINISHED GRADE PER UDACS. ALL LVVWD FACILITIES SHALL BE ACCESSIBLE AT ALL TIMES.

WATER PRESSURE NOTE:

THIS PROPERTY MAY HAVE STATIC WATER PRESSURE IN EXCESS OF 80 PSI. THE UNIFORM PLUMBING CODE REQUIRES THAT INDIVIDUAL, ON-SITE (PRIVATE), PRESSURE-REDUCING VALVES (PRV) BE INSTALLED WHENEVER THE PRESSURE EXCEEDS 80 PSI. PRV'S ARE THE DEVELOPER'S RESPONSIBILITY, AND WILL NOT BE INSPECTED OR INCLUDED IN THE ACCEPTANCE OF LVVWD FACILITIES.

DISCLAIMER NOTES

UTILITY LOCATIONS SHOWN HEREON ARE APPROXIMATE ONLY. IT SHALL BE THE CONTRACTOR'S RESPONSIBILITY TO DETERMINE THE EXACT HORIZONTAL AND VERTICAL LOCATION OF ALL EXISTING UNDERGROUND AND OVERHEAD UTILITIES PRIOR TO COMMENCING CONSTRUCTION. NO REPRESENTATION IS MADE THAT ALL EXISTING UTILITIES ARE SHOWN HEREON. THE ENGINEER ASSUMES NO RESPONSIBILITY FOR UTILITIES NOT SHOWN OR UTILITIES NOT SHOWN IN THEIR PROPER LOCATION

BASIS OF BEARINGS

NORTH 05°36'32" WEST BEING THE BEARING OF THE WEST LINE OF THE NORTHWEST QUARTER (NW 1/4) OF SECTION 33, TOWNSHIP 20 SOUTH, RANGE 59 EAST, M.D.M. AS SHOWN IN BOOK 149, PAGE 46 PLATS ON FILE AT THE CLARK COUNTY, NEVADA RECORDER'S OFFICE.

BENCHMARK

DESCRIPTION	NAVD 88 DATUM	NAVD 88 DATUM
CITY OF LAS VEGAS VERTICAL CONTROL POINT "D368", BEING A USC&GS DISC SET IN ROCK SOUTH OF CHARLESTON BLVD & WEST OF DEENTION BASIN.	3246.63 (FEET)	989.574 (METERS)
CITY OF LAS VEGAS VERTICAL CONTROL 2008 AND ADJUSTMENT (UPDATED 05/24/2010) BASED ON NORTH AMERICAN VERTICAL DATUM OF 1988 (NAVD'88).		

L17-01470 715-~~286~~ 199

REV	DATE	DESCRIPTION	DATE	AGEN APP	DATE	CCW APP	DATE

STATE OF NEVADA PROFESSIONAL ENGINEER No. 8359 DANIEL W. LEE Exp. 12/31/2018

PROJECT NO. 889-002
DESIGN:
DRAWN:
CHECK:
PLOT DATE: 01-02-18
PLOT TIME: 17:53:27

GCW ENGINEERS \ SURVEYORS
1555 S. RAINBOW BLVD.
LAS VEGAS, NV 89146
T: 702.804.2000
F: 702.804.2299
gcwengineering.com

F:\Projects\800\889-002\DWG\Production\PHASE-II\P2-889-002_c5.2_UP
Daniel Lee

CA LAS VEGAS SVD, LLC

DORAL ACADEMY
RED ROCK CAMPUS HIGH SCHOOL

UTILITY PLAN II

DRAWING
C5.2
11 OF 13 SHTS

PRO.#:125994 AGREE#:116643 QS:137-34-NW

H: / CLV: L17-01470

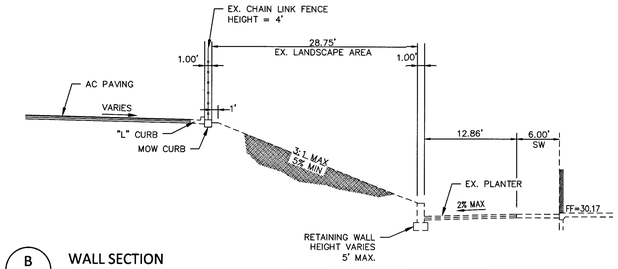

B / C4.1 **WALL SECTION**
NOT TO SCALE

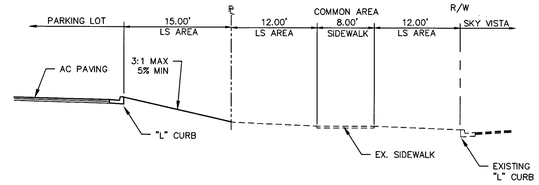

J / C4.1 **PERIMETER SECTION**
NOT TO SCALE

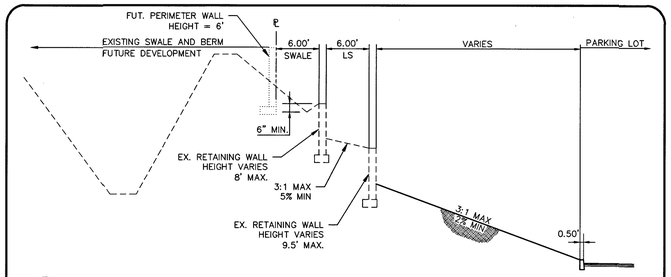

N / C4.1 **PERIMETER SECTION**
NOT TO SCALE

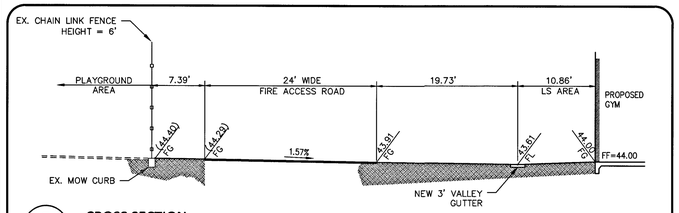

E / C4.1 **CROSS SECTION**
NOT TO SCALE

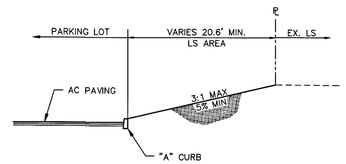

K / C4.1 **PERIMETER SECTION**
NOT TO SCALE

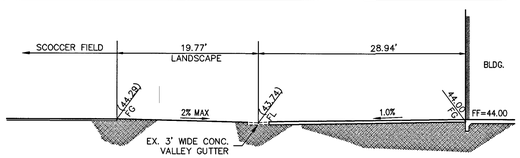

F / C4.1 **CROSS SECTION**
NOT TO SCALE

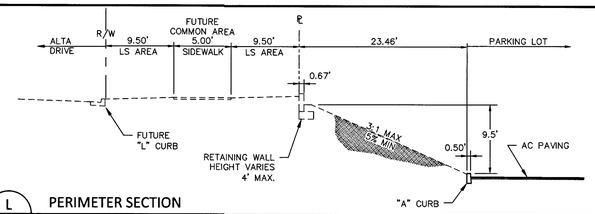

L / C4.1 **PERIMETER SECTION**
NOT TO SCALE

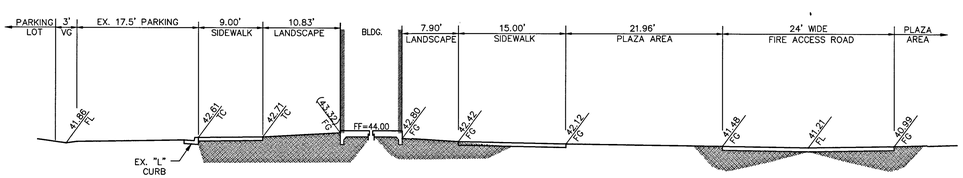

G / C4.1 **CROSS SECTION**
NOT TO SCALE

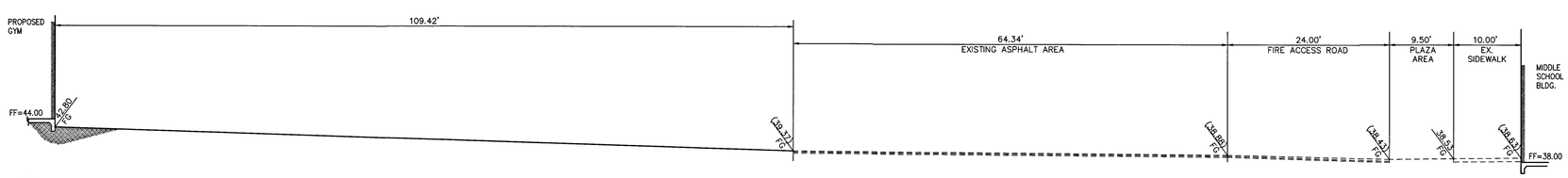

H / C4.1 **CROSS SECTION**
NOT TO SCALE

STATE OF NEVADA
PROFESSIONAL ENGINEER
No. 8354
ROY D. CLARK
Exp. 12/31/2018
CIVIL

REV	DATE	DESCRIPTION	DATE	AGCN APP	DATE	CGW APP	DATE 7/18

PROJECT NO. 889-002
DESIGN:
DRAWN:
CHECK:
PLOT DATE: 01-02-18
PLOT TIME: 17:54:44

GCW ENGINEERS\SURVEYORS
1555 S. RAINBOW BLVD.
LAS VEGAS, NV 89146
T: 702.804.2000
F: 702.804.2299
gcwengineering.com

F:\Projects\800\889-002\DWG\Production\PHASE-II\P2-889-002_cC8.1.DEL
Daniel Lee

CA LAS VEGAS SVD, LLC

DORAL ACADEMY
RED ROCK CAMPUS HIGH SCHOOL

DETAIL SHEET I

DRAWING
C8.1
12 OF 13 SHTS

L17-01470 7/5-~~186~~ 199

H: / CLV: L17-01470

G — PAVING / CONCRETE SECTIONS
NOT TO SCALE

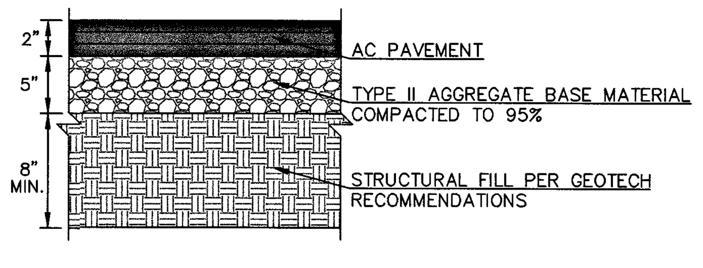

LIGHT DUTY ASPHALT SECTION (CAR)

* SEE CURRENT GEOTECHNICAL REPORT FOR ADDITIONAL INFORMATION.

C — BOLLARD DETAIL
NOT TO SCALE

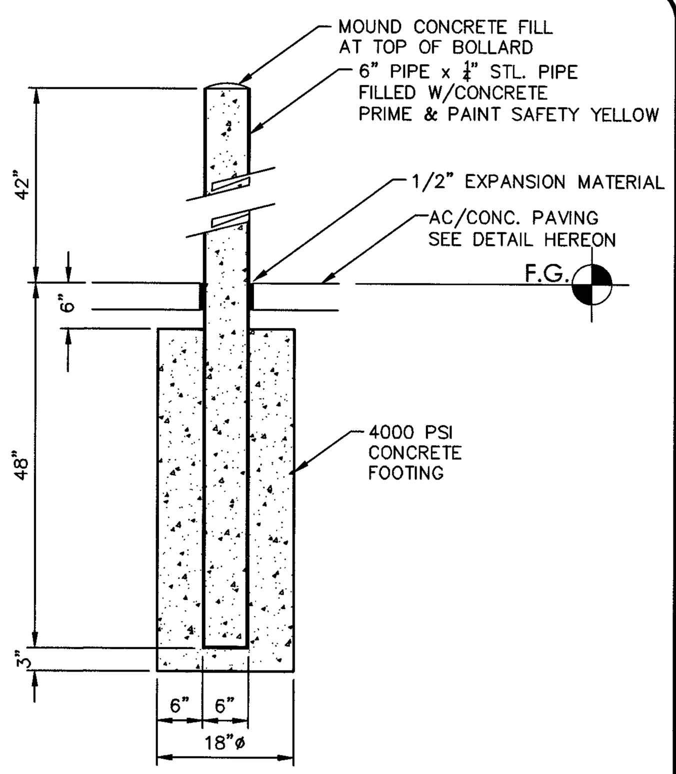

F — CLEAN OUT DETAIL
NOT TO SCALE

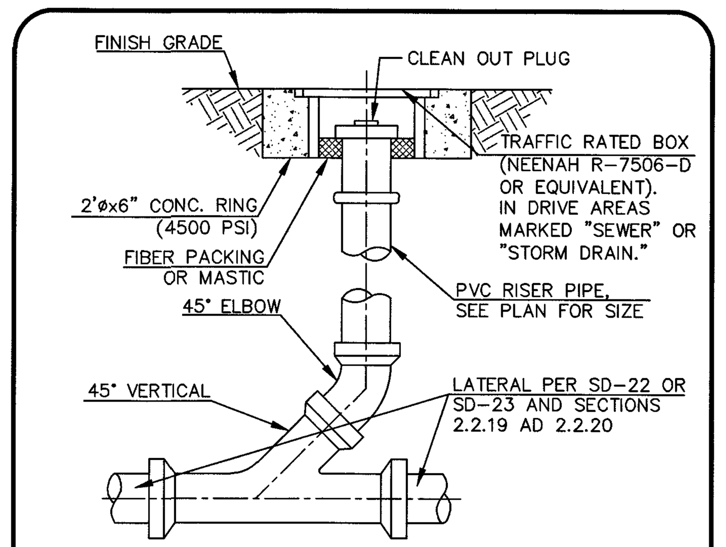

B — 3' CONCRETE VALLEY GUTTER
NOT TO SCALE

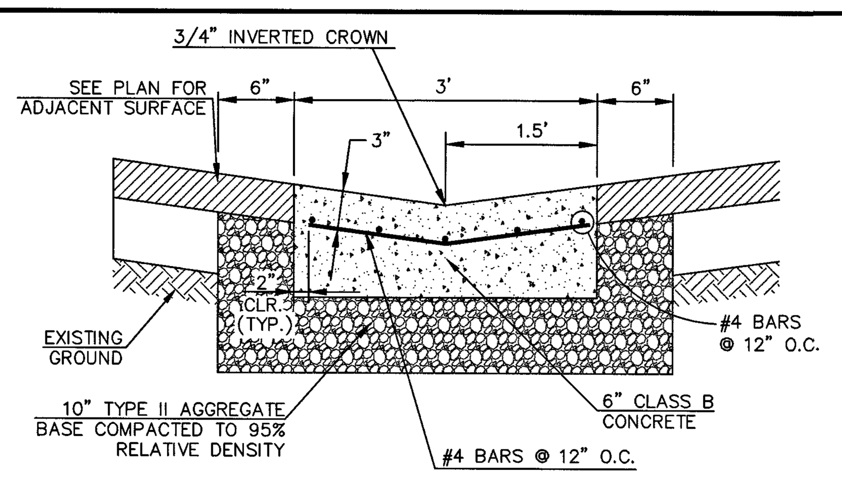

E — WYE (PER STD. DWG. SD-22)
NOT TO SCALE

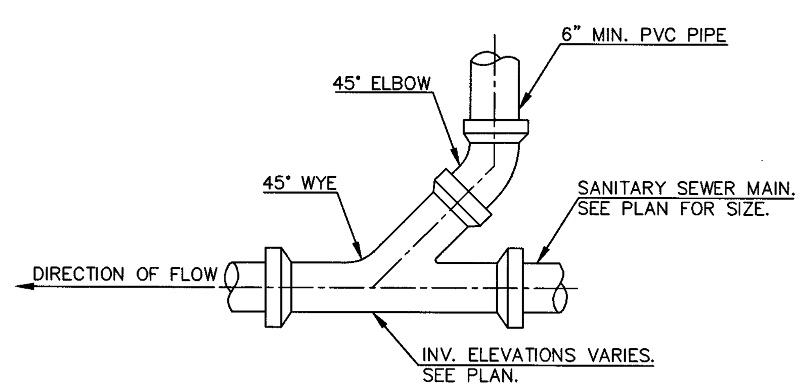

H — NDOT DROP INLET TYPE 2 DETAIL
NOT TO SCALE

BILL OF MATERIALS (RCP HDPE CMP)

PIPE SIZE (INCH)	SINGLE (ONE GRATE) * CONCRETE (CY) BASE QUAN. (H MIN.)	ADD RATE (CY/FT)	* REINF. (LB.) BASE QUAN. (H MIN.)	ADD RATE (LB/FT)	STR STEEL (LB)	DOUBLE (TWO GRATES) * CONCRETE (CY) BASE QUAN. (H MIN.)	ADD RATE (CY/FT)	* REINF. (LB.) BASE QUAN. (H MIN.)	ADD RATE (LB/FT)	STR STEEL (LB)	TRIPLE (THREE GRATES) * CONCRETE (CY) BASE QUAN. (H MIN.)	ADD RATE (CY/FT)	* REINF. (LB.) BASE QUAN. (H MIN.)	ADD RATE (LB/FT)	STR STEEL (LB)
≤15	0.71	0.19	36	10	211	1.06	0.26	50	13	397	1.41	0.33	70	17	583
18	0.89	0.20	40	10	306	1.31	0.28	56	13	574	1.72	0.35	77	18	842
24	1.08	0.22	58	12	349	1.56	0.30	80	15	652	2.04	0.37	105	20	956
30	1.28	0.24	63	12	390	1.83	0.31	86	16	729	2.38	0.39	113	20	1068
36	1.50	0.26	67	13	524	2.11	0.33	92	16	980	2.72	0.41	120	21	1435
42	1.71	0.28	90	15	575	2.39	0.35	120	18	1073	3.07	0.43	154	22	1571
48	1.94	0.30	95	15	707	2.68	0.37	127	18	1329	3.42	0.44	163	23	1951

*The Concrete And Reinforcing Quantities Are Based On The H Min. Shown. Increase The Concrete And Reinforcing Base Quantity By The Corresponding Add Rate (Per Foot Of Increased H) If The H Specified Is Larger Than H Min.

TABLE OF DIMENSIONS (RCP HDPE CMP)

PIPE SIZE (INCH)	A	H Min. (FT)	MAIN BARS (INCH)	FRAME ANGLES (INCH)	FRAME BARS (INCH)	L (FT) SINGLE GRATE	DOUBLE GRATE	TRIPLE GRATE
≤ 15	2'	2.50	3½ X ⅜	4 X 3 X ⅜	4 X ⅜	2'	4'	6'
18	2' 6"	3.00	4½ X ⅜	5 X 3 X ⅜	5 X ⅜	2'	4'	6'
24	3'	3.50	4½ X ⅜	5 X 3 X ⅜	5 X ⅜	2'	4'	6'
30	3' 6"	4.00	4½ X ⅜	5 X 3 X ⅜	5 X ⅜	2'	4'	6'
36	4'	4.50	5½ X ⅜	6 X 3½ X ⅜	6 X ⅜	2'	4'	6'
42	4' 6"	5.00	5½ X ⅜	6 X 3½ X ⅜	6 X ⅜	2'	4'	6'
48	5'	5.50	5½ X 7/16	6 X 3½ X ⅜	6 X ⅜	2'	4'	6'

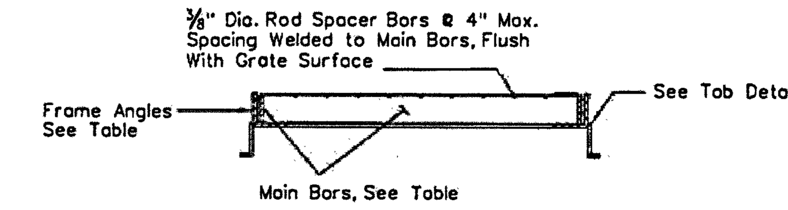

SECTION D-D

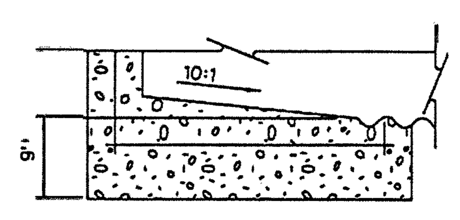

SECTION B-B

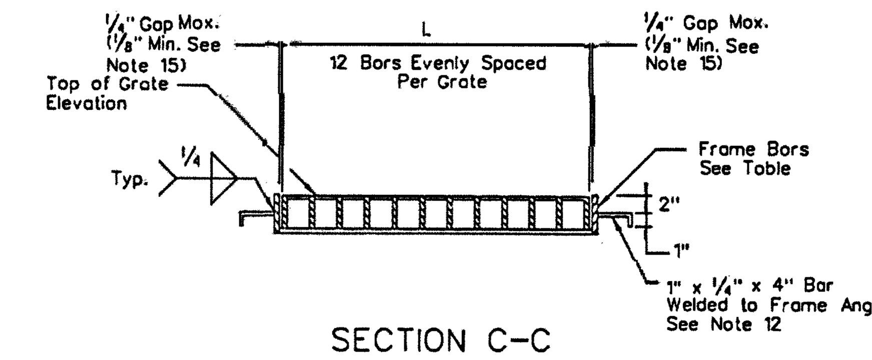

SECTION C-C

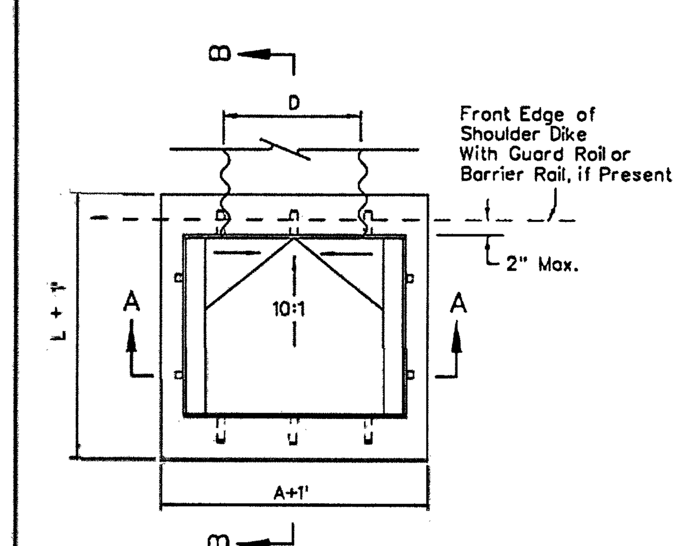

PLAN

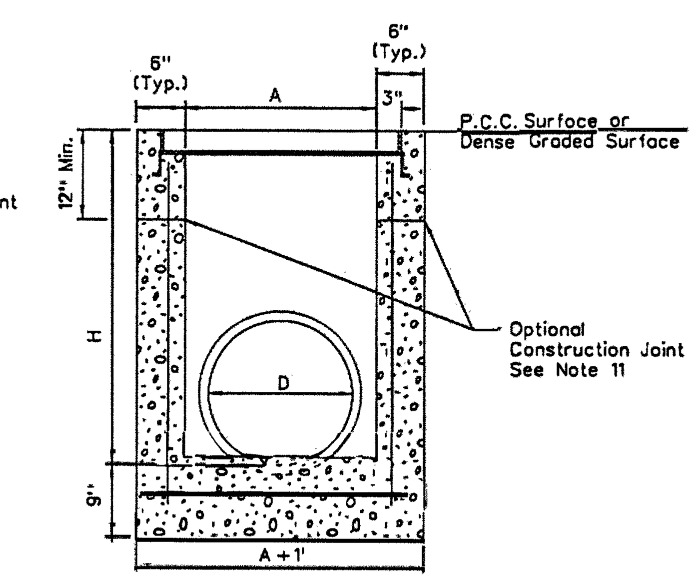

SECTION A-A

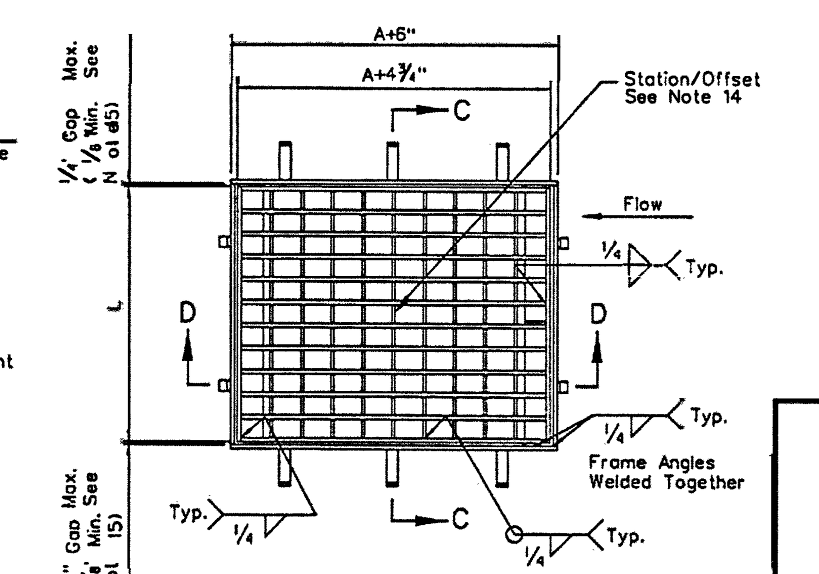

GRATE AND FRAME

NOTES:
1. All concrete shall be class A or AA.
2. Reinforcing steel shall be No.4 bars with maximum spacing at 18 inch centers, wired tightly at all intersections and embedded 2 inches clear of all concrete surfaces.
3. Exposed edges of concrete shall be chamfered 1 inch.
4. Dimensions may be varied to fit local conditions if ordered by the engineer.
5. Commercial prefabricated gratings approved by the bridge division may be used in lieu of the field-welded grating shown.
6. Extreme low cover situations to be reviewed by hydraulics engineer.
7. Slope catch basin floors 10:1 from all directions toward outlet pipe. If basin is used as a junction, shape flow line(s) to outlet pipe and provide a 10:1 slope to flow line(s).
8. See sheet R-2.9.1 for details if connecting HDPE pipe.
9. A single Type 2 drop inlet shall be constructed unless a double or triple is specified.
10. Single grate configuration shown for clarity. Outside dimensions of each grate shall measure 2 feet by A+4¾".
11. Run rebar continuous thru construction joint. Joint must be a minimum of 3 inches from horizontal bars.
12. Weld one tab on ℄ of grate and remaining two tabs 6 inches from edge of frame. Six tabs per inlet, three tabs on each side
13. Weld tabs 6 inches from edge of frame. Four tabs per grate, two on each side.
14. For multiple grate installations, the station/offset is to the center of the concrete drop inlet structure.
15. Grate is to fit in the frame and be easily removed. If the gap between the grate and frame is greater than ¼" on each side of the grate, the grate and frame shall be removed and reconstructed to the tolerances specified or, with approval of the engineer, a filler strip up to ¼" in thickness may be welded flush to the top of the frame to reduce the gap to a maximum of ¼"
16. Additional pipe penetrations may be placed in any wall. Pipe penetrations are to be to the center of the structure wall unless specified otherwise.

STATE OF NEVADA
DEPARTMENT OF TRANSPORTATION

DROP INLET
TYPE 2

R-4.2.1	(609)	Signed Original On File
ADOPTED 11/70	REVISED 10/15	CHIEF HYDRAULICS ENGR.

A — TYPE 'A' CURB (ONSITE)
NOT TO SCALE

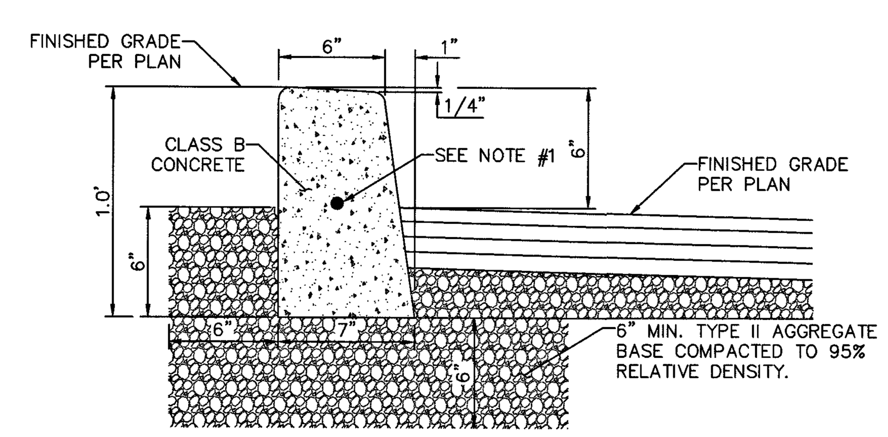

TYPE 'A' CURB SECTION

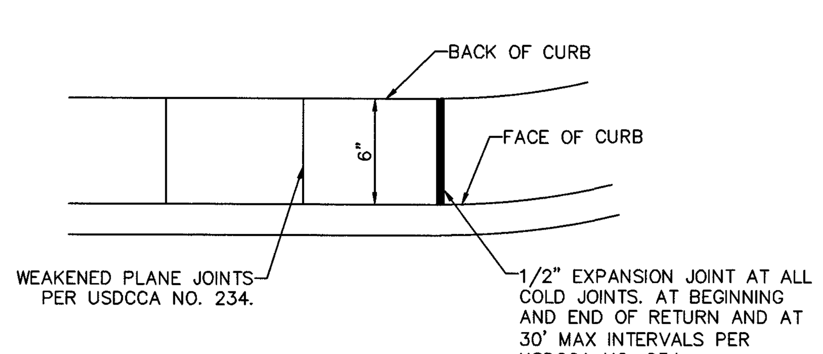

TYPICAL PLAN

NOTES:
1. CONTINUOUS #4 REBAR IN RADIUS OF CURB ONLY.

D — VALLEY GUTTER TRANSITION
NOT TO SCALE

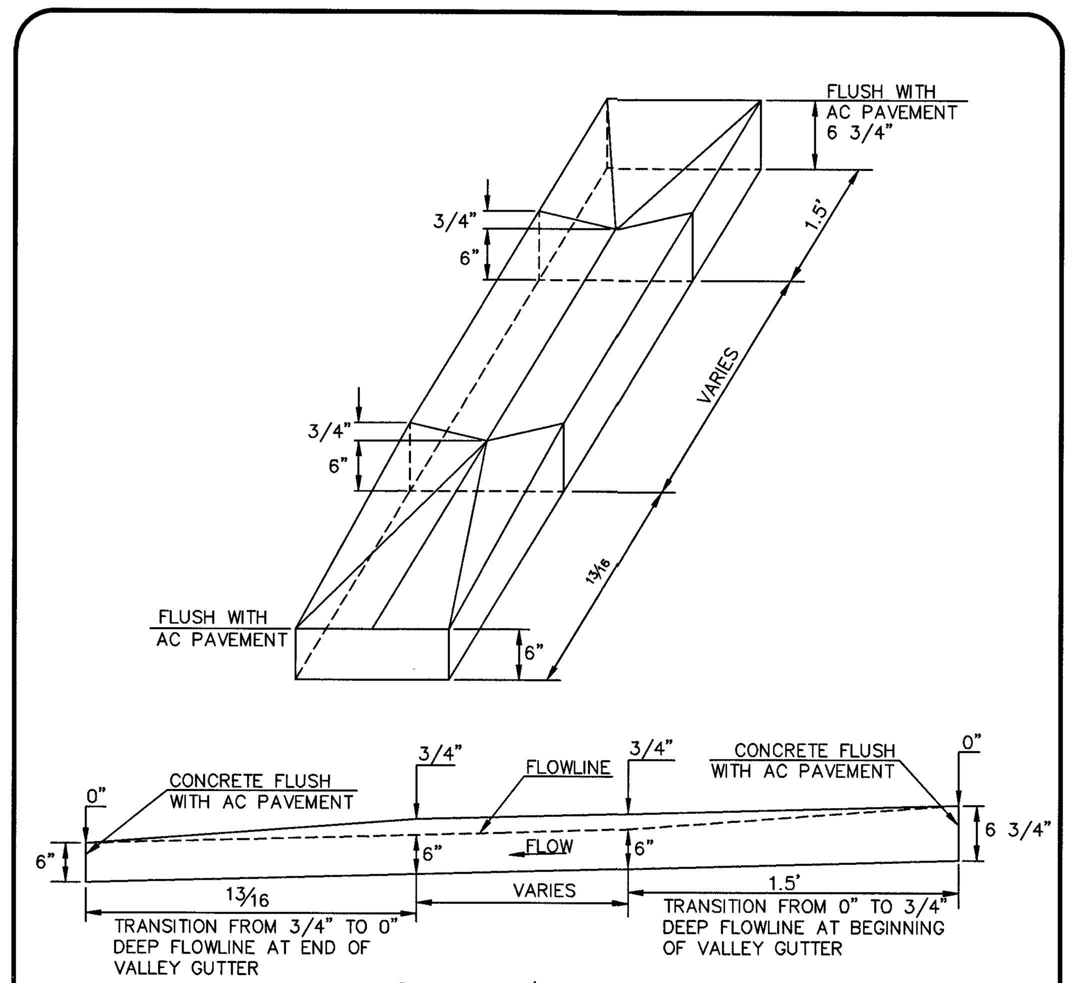

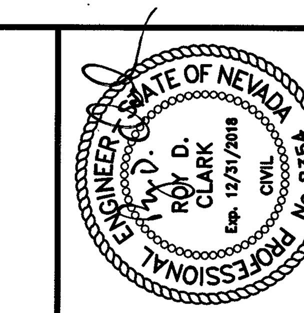

DATE: 1/3/18

REV	DATE	DESCRIPTION	DATE	AGEN APP	DATE	GCW APP

PROJECT NO. 889-002
DESIGN:
DRAWN:
CHECK:
PLOT DATE: 01-02-18
PLOT TIME: 17:55:20

GCW
ENGINEERS \ SURVEYORS
1555 S. RAINBOW BLVD.
LAS VEGAS, NV 89146
T: 702.804.2000
F: 702.804.2299
gcwengineering.com

F:\Projects\800\889-002\DWG\Production\PHASE-II\P2-889-002_cC8.1_DET.dwg
Daniel Lee

CA LAS VEGAS SVD, LLC
DORAL ACADEMY
RED ROCK CAMPUS HIGH SCHOOL
DETAIL SHEET II

DRAWING
C8.2
13 OF 13 SHTS

L17-01470715-~~186~~ 199

H: / CLV: L17-01470