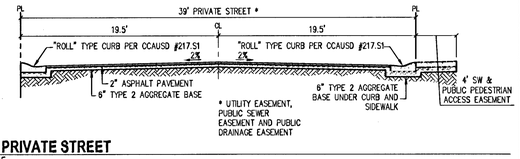

A. 39' PRIVATE STREET
NOT TO SCALE

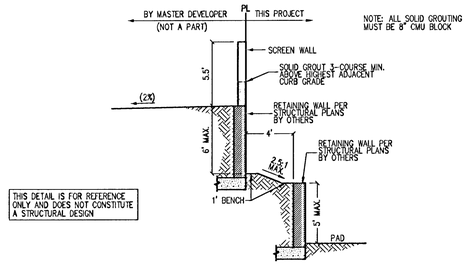

1. PERIMETER SECTION - 2-STACKED RETAINING WALL
NOT TO SCALE

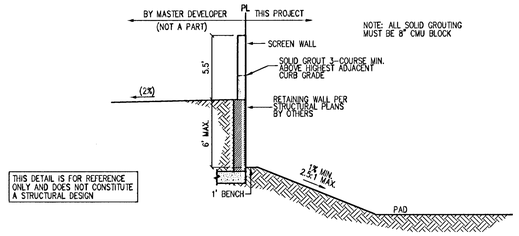

2. PERIMETER SECTION - RETAINING WALL WITH SCARP
NOT TO SCALE

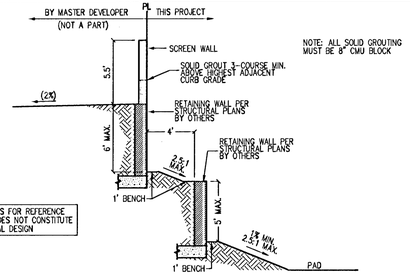

3. PERIMETER SECTION - 2-STACKED RETAINING WALL AND SCARP
NOT TO SCALE

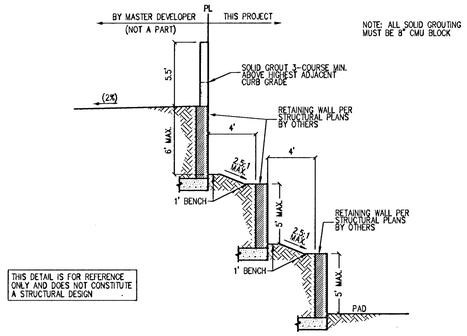

4. PERIMETER SECTION - 3-STACKED RETAINING WALL
NOT TO SCALE

5. NOT USED
NOT TO SCALE

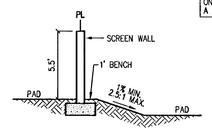

6. PAD TO PAD WITHOUT RETAINING WALL
NOT TO SCALE

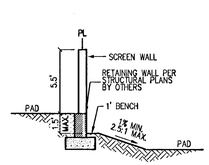

7. PAD TO PAD WITH RETAINING WALL AND SCARP
NOT TO SCALE

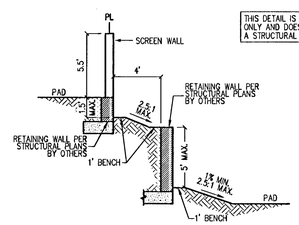

8. REAR YARD WITH 2-STACKED RETAINING AND SCREEN WALL
NOT TO SCALE

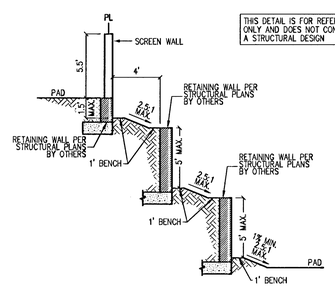

9. REAR YARD WITH 3-STACKED RETAINING AND SCREEN WALL
NOT TO SCALE

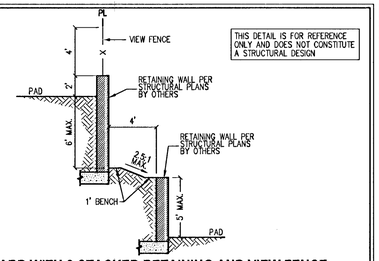

10. REAR YARD WITH 2-STACKED RETAINING AND VIEW FENCE
NOT TO SCALE

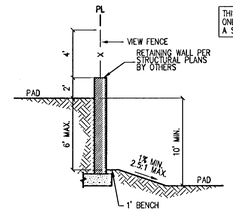

11. REAR YARD WITH VIEW FENCE
NOT TO SCALE

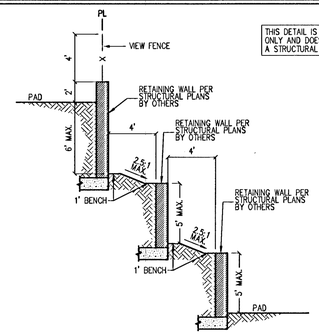

12. REAR YARD WITH 3-STACKED RETAINING AND VIEW FENCE
NOT TO SCALE

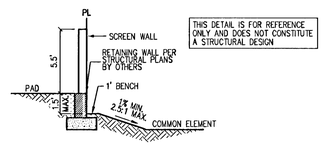

13. PAD ABOVE COMMON ELEMENT WITH SCARP
NOT TO SCALE

14. NOT USED
NOT TO SCALE

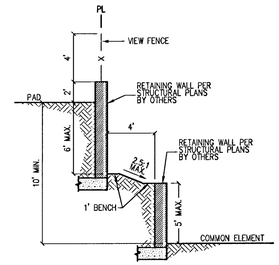

15. PAD ABOVE COMMON ELEMENT WITH 2-STACKED RETAINING AND VIEW FENCE
NOT TO SCALE

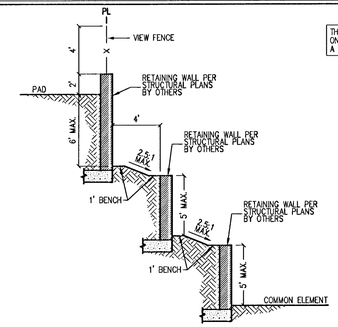

16. PAD ABOVE COMMON ELEMENT WITH 3-STACKED RETAINING AND VIEW FENCE
NOT TO SCALE

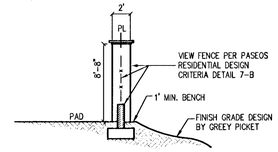

17. PERIMETER SECTION AT PASEO
NOT TO SCALE

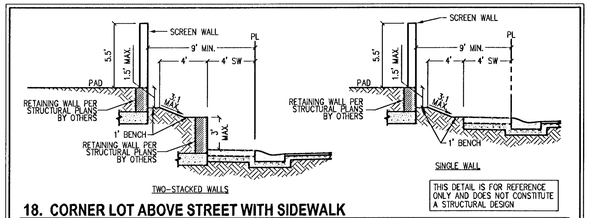

18. CORNER LOT ABOVE STREET WITH SIDEWALK
NOT TO SCALE

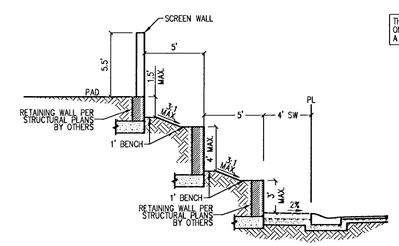

19. CORNER LOT ABOVE STREET WITH STACKED RETAINING WALL AND SIDEWALK
NOT TO SCALE

10744995-2

SLATER HANIFAN GROUP
CONSULTING ENGINEERS & PLANNERS
5740 S. ARVILLE STREET #216, LAS VEGAS, NV 89118
PHONE (702) 284-5300 FAX (702) 284-5399

NO.	DESCRIPTION	DATE	BY	APP. DATE	APP.

LENNAR®
CITY OF LAS VEGAS

DELANO - PHASE 1
(SUMMERLIN VILLAGE 23B - PARCEL RS)
GRADING SECTIONS AND DETAILS I

S27 T20 R59

DATE: 03/18/14
DRAFTER: BCC
DESIGNER: BCC
CHECKED: STS
PROJECT NO. LEN1303.000

PROFESSIONAL ENGINEER — STATE OF NEVADA
JERRY STATES
Exp. 06/30/2014
CIVIL
No. 14167
3-18-14

D-1
SHEET 8 OF 25

H-52924

J:\len1303-000 summ v23 sorrel v1\dwg\lennar\phase 1\len1303-000 sht d-1.dwg 3/18/2014 11:57 AM Brian Chapman