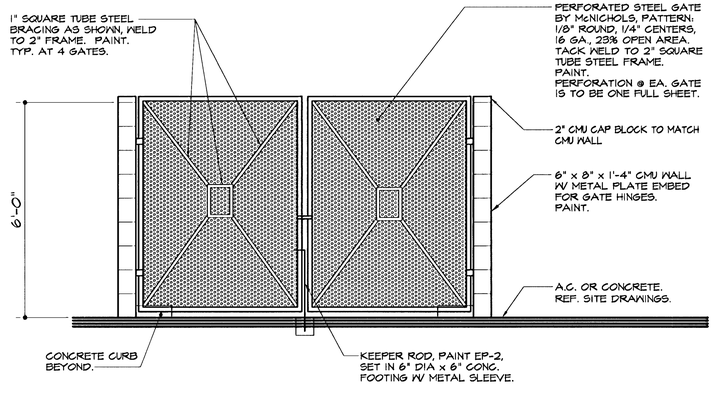

1 Trash Enclosure Gate

Scale: 1/2"=1'-0" 02830-06 03-01

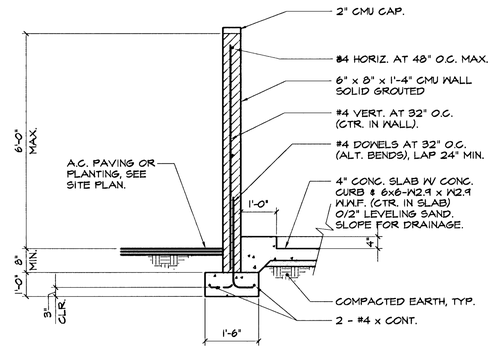

2 Trash Enclosure Wall

Scale: 1/2"=1'-0" 02830-05 03-02

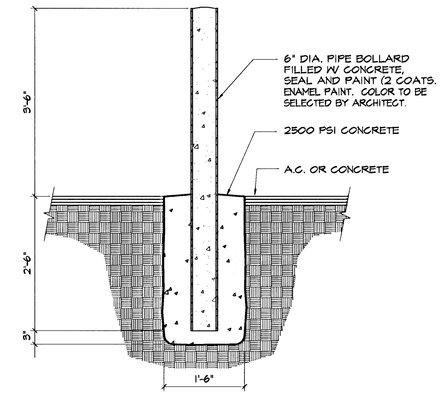

3 Steel Pipe Bollard

Scale: 3/4"=1'-0" 03000-03 03-03

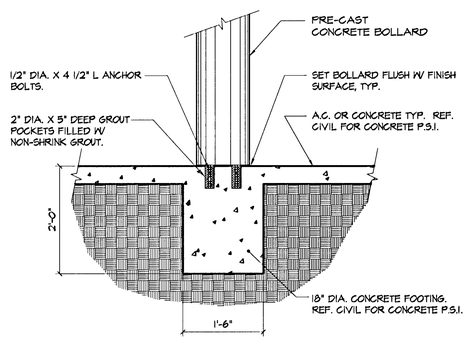

4 Pre-Cast Conc. Bollard Anchorage

Scale: 3/4"=1'-0" xxxxx-xx 03-04

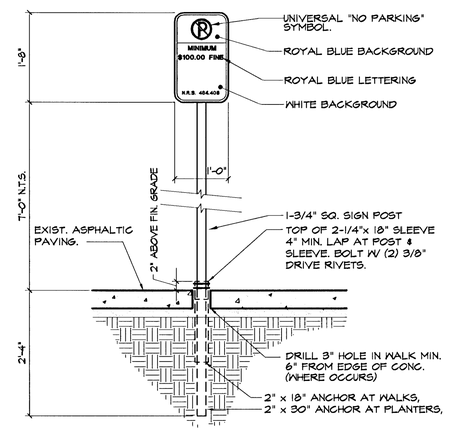

ALL COMPONENTS TO BE GALVANIZED SQUARE POST. ATTACH ANCHOR TO SLEEVE PRIOR TO DRIVING INTO GROUND.

5 No Parking Sign

Scale: N.T.S. xxxxx-xx A3-05

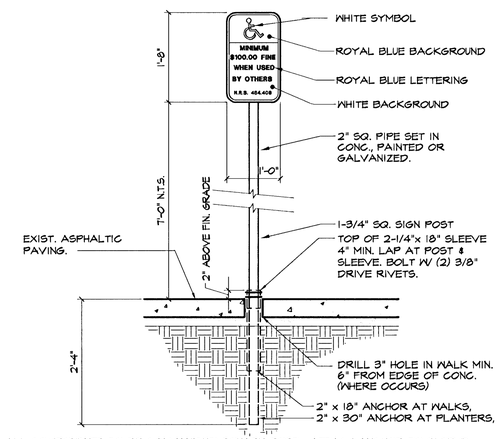

ALL COMPONENTS TO BE GALVANIZED SQUARE POST. ATTACH ANCHOR TO SLEEVE PRIOR TO DRIVING INTO GROUND.

6 Handicap Parking Signage

Scale: N.T.S. xxxxx-xx A3-06

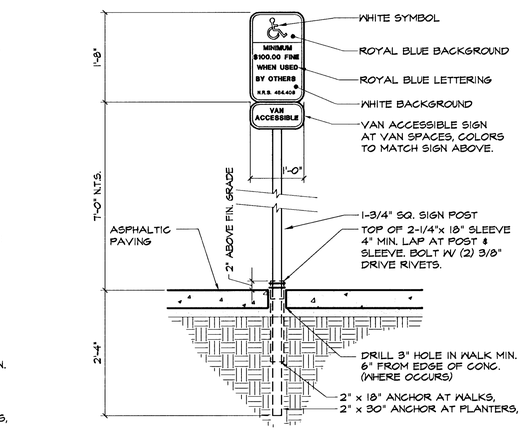

ALL COMPONENTS TO BE GALVANIZED SQUARE POST. ATTACH ANCHOR TO SLEEVE PRIOR TO DRIVING INTO GROUND.

7 Handicap Parking Signage

Scale: N.T.S. xxxxx-xx A3-07

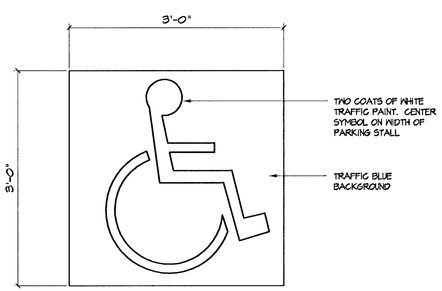

NOTE:
SEE LOCATION ON SITE PLAN AND DETAILS

8 Accessible Parking Symbol

Scale: N.T.S. 10426-04 A3-08

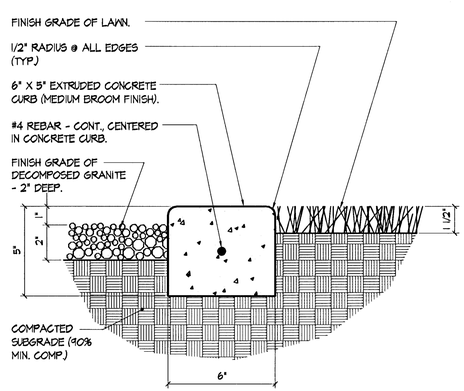

NOTE: REF. CIVIL DRAWINGS FOR CONCRETE P.S.I. (TYP.)

9 Concrete Curb

Scale: 3"=1'-0" 02900-05 A3-09

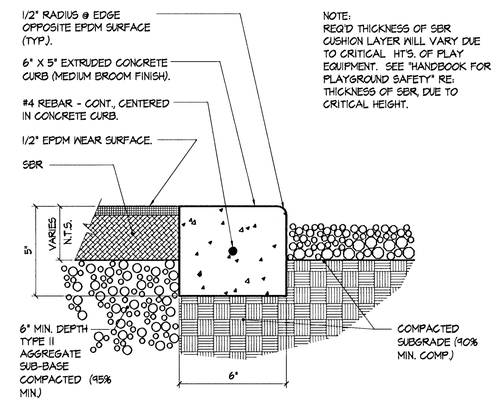

NOTE:
REQ'D THICKNESS OF SBR CUSHION LAYER WILL VARY DUE TO CRITICAL HT'S. OF PLAY EQUIPMENT. SEE "HANDBOOK FOR PLAYGROUND SAFETY" RE: THICKNESS OF SBR, DUE TO CRITICAL HEIGHT.

NOTE: REF. CIVIL DRAWINGS FOR CONCRETE P.S.I. (TYP.)

NOTE: REF. STANDARD CONCRETE CURB DETAIL FOR TRANSITIONS TO D.G. OR TURF.

10 Concrete Curb @ Resilient Surfacing

Scale: 3"=1'-0" 02900-xx A3-10

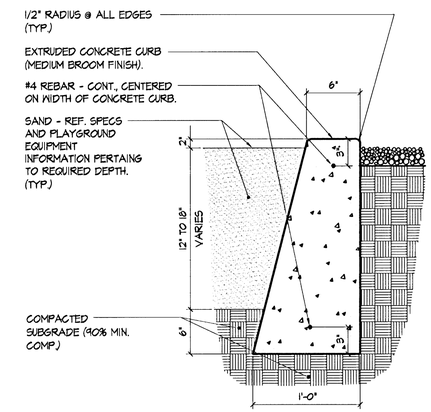

NOTE: REF. CIVIL DRAWINGS FOR CONCRETE P.S.I. (TYP.)

NOTE: REF. STANDARD CONCRETE CURB DETAIL FOR TRANSITIONS TO D.G. OR TURF.

11 Conc. Curb for Sand @ Playground

Scale: 1 1/2"=1'-0" 02900-xx A3-11

CITY OF LAS VEGAS NEVADA

REVISIONS

CONSULTANT

DEPARTMENT OF PUBLIC WORKS

Dexter Park - Rehab

Miscellaneous Site Details

DEPARTMENT OF PUBLIC WORKS
ARCHITECTURAL SERVICES

400 EAST STEWART AVENUE
LAS VEGAS, NEVADA 89101
PHONE: (702) 229-6535
FAX: (702) 382-9232
TDD: (702) 386-9108

PROJECT MANAGER
PATRICK BATTE', AIA, NCARB

DRAWN	BBREED
FILE	dexter/dp09a3
DATE	2/28/2001
SCALE	Full Scale
PROJECT	Dexter Park
SHT NO	4

A3

650.16-11

DRAWINGS, OR INSTRUMENTS OF SERVICE ARE THE PROPERTY OF THE DESIGN PROFESSIONAL WHOSE STAMP OF CERTIFICATION APPEARS ON THE DRAWINGS AND SPECIFICATIONS AND USE OR REPRODUCTION, IN WHOLE OR IN PART WITHOUT WRITTEN CONSENT IS STRICTLY PROHIBITED. COPIES OF THE DRAWINGS AND SPECIFICATIONS PREPARED BY THE CLIENT MAY BE UTILIZED ONLY FOR OCCUPYING THE PROJECT FOR WHICH THEY WERE PREPARED AND NOT FOR THE CONSTRUCTION OF ANY OTHER PROJECT. N.A.C. 623.780