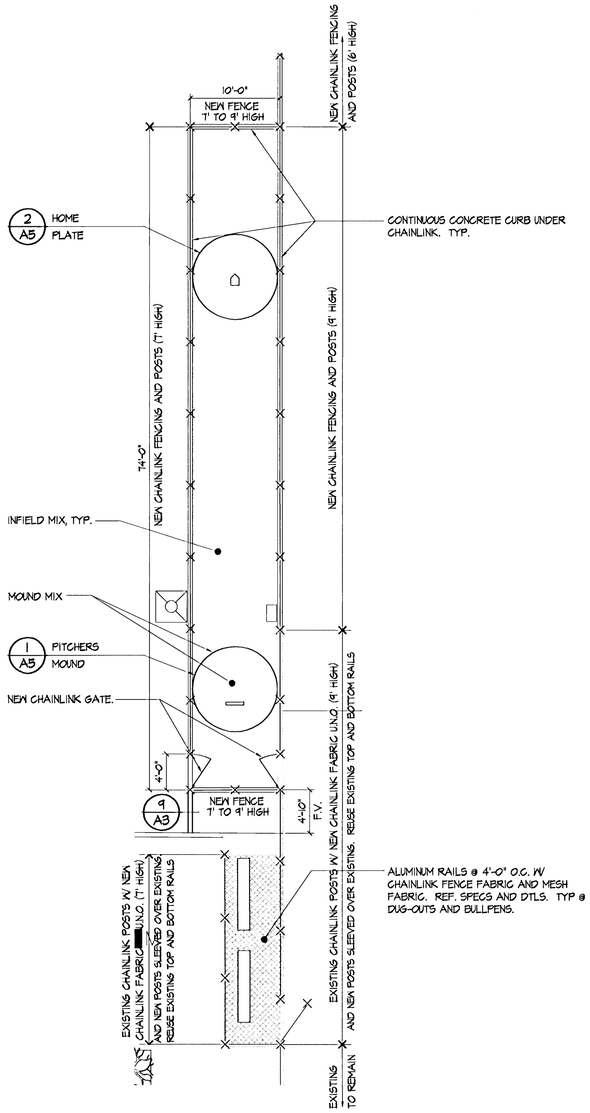

3 Enlarged Plan @ West Dug-Out / Bullpen
Scale: 1/8"=1'-0"

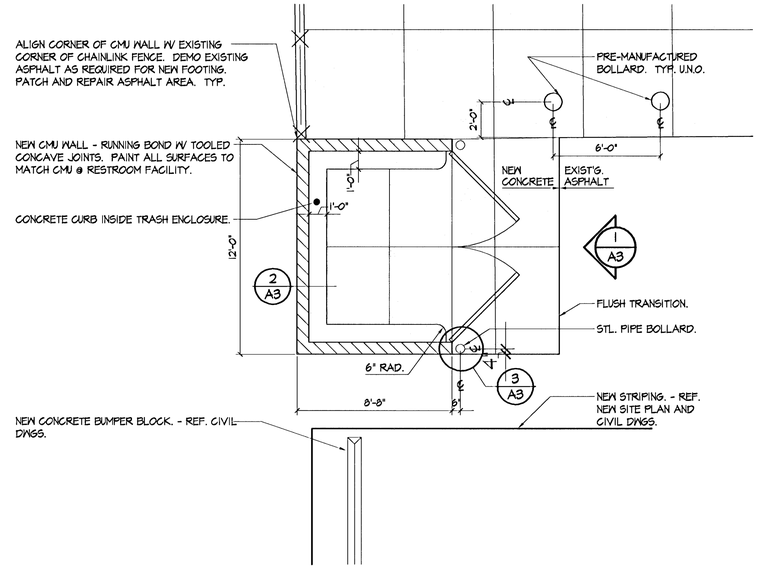

1 Enlarged Plan @ Trash Enclosure
Scale: 1/4"=1'-0"

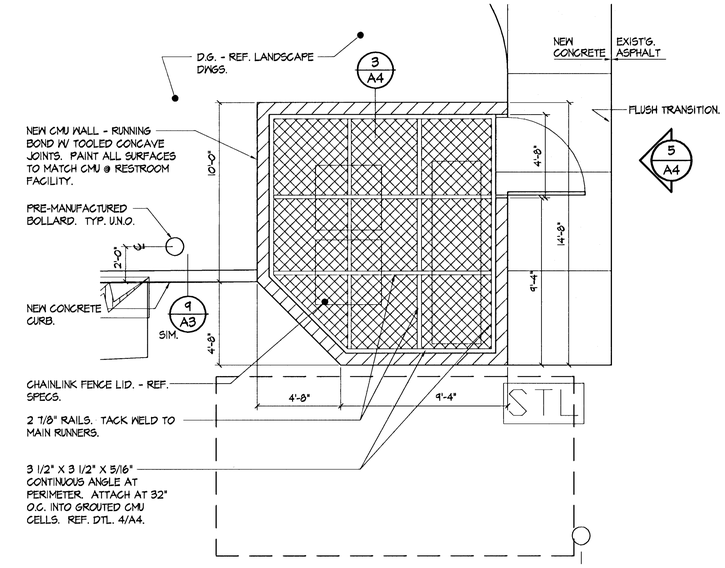

2 Enlarged Plan @ Equipment Enclosure
Scale: 1/4"=1'-0"

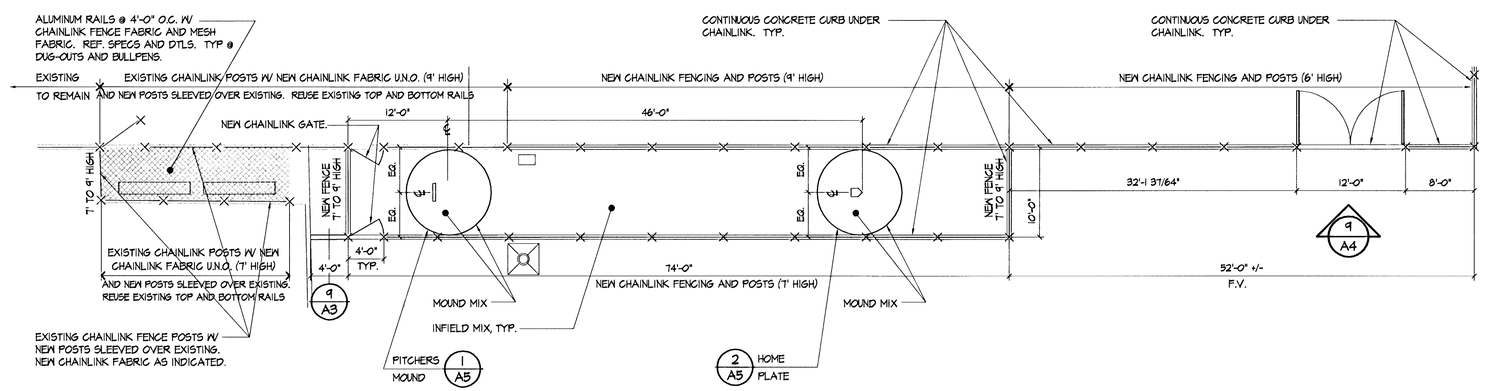

4 Enlarged Plan @ South Dug-Out / Bullpen
Scale: 1/8"=1'-0"

Chainlink Fencing General Notes:

- REUSE EXISTING TOP AND BOTTOM RAILS IN AREAS WHERE FENCING IS TO BE MODIFIED. REF. SPECS AND DETAILS.
- INTERMEDIATE RAILS TO BE PROVIDED FOR CHAINLINK FENCES OVER 6'-0" HIGH. TYP. REF. SPECS.
- PROVIDE TOP AND BOTTOM RAILS ON ALL CHAINLINK FENCES. TYP. REF. SPECS.

CITY OF LAS VEGAS NEVADA

REVISIONS

CONSULTANT

DEPARTMENT OF PUBLIC WORKS

Dexter Park - Rehab

Enlarged Plans - Trash Enclosure, Equipment Enclosure, Dug-Outs / Bullpens

DEPARTMENT OF PUBLIC WORKS
ARCHITECTURAL SERVICES

400 EAST STEWART AVENUE
LAS VEGAS, NEVADA 89101
PHONE: (702) 229-6533
FAX: (702) 382-3232
TDD: (702) 386-9108

PROJECT MANAGER
PATRICK BATTE', AIA, NCARB

DRAWN	BBREED
FILE	dexter/dp07al
DATE	2/28/2001
SCALE	1/4"=1'-0"
PROJECT	Dexter Park
SHT NO	9

659.16-11

A1

DRAWINGS AS INSTRUMENTS OF SERVICE ARE THE PROPERTY OF THE DESIGN PROFESSIONAL WHOSE STAMP OF CERTIFICATION APPEARS ON THE DRAWINGS AND SPECIFICATIONS. ANY USE OR REPRODUCTION, IN WHOLE OR IN PART WITHOUT WRITTEN CONSENT IS STRICTLY PROHIBITED COPIES OF THE DRAWINGS AND SPECIFICATIONS RETAINED BY THE CLIENT MAY BE UTILIZED ONLY FOR OCCUPYING THE PROJECT FOR WHICH THEY WERE PREPARED AND NOT FOR THE CONSTRUCTION OF ANY OTHER PROJECT IN A C 522-7NO