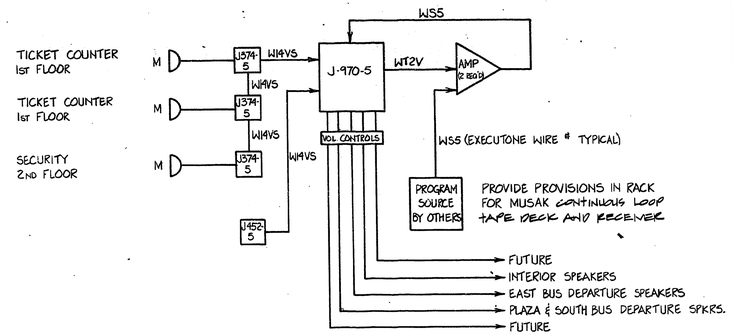

SOUND SYSTEM ONE LINE DIAGRAM

SEE NOTES 9-14, THIS SHEET

BID GROUP 2, ADDITIVE ITEM 1

NOTES: (THIS SHEET ONLY)

1. SEE GENERAL NOTES ON SHEET E1.
2. ALL EXPOSED WIRING SUBJECTED TO WEATHER & SUNLIGHT SHALL BE APPROVED FOR SUCH USE.
3. SEE ARCHITECTURAL DRAWINGS FOR ELEVATIONS & MOUNTING DETAILS.
4. MOUNT EQUIPMENT IN WALL HUNG 3 HINGED EQUIPMENT RACK IN ROTUNDA.
5. M TO BE EQUAL TO EXECUTONE EXBB-P MICROPHONE.
6. J374-5 TO BE EQUAL TO EXECUTONE 5 CHANNEL VOICE SELECTOR.
7. J452-5 TO BE EQUAL TO EXECUTONE 5 CHANNEL MUSIC SELECTOR.
8. J970-5 TO BE EQUAL TO EXECUTONE RELAY ASSEMBLY.
9. AMP TO BE EQUAL TO EXECUTONE 100W 4402005 (2 REQ'D).
10. PROVIDE INDIVIDUAL VOLUME CONTROLS FOR EACH OUTPUT CHANNEL.
11. SPEAKERS TO BE EQUAL TO EXECUTONE #4401905 INDOOR & 4401904 OUTDOOR (BRASS PLATED).
12. SUCCESSFUL BIDDER SHALL GUARANTEE TO THE OWNER THAT THE SYSTEM WILL PERFORM AS INTENDED ON THESE DOCUMENTS WITHOUT SOUND DISTORTION.
13. ALL SPEAKERS SHALL HAVE A CUSTOM BRASS PLATED FINISH.
14. SUBMIT SHOP DRAWINGS & DETAILS OF ALL MOUNTINGS AND EQUIPMENT.

PANEL LP 1 3 PH,4 WIRE, 120/208 VOLTS 200 A MCB MOUNTING FLUSH
MIN INTERRUPTING RATING VERIFY RMS SYM AMPS LOCATION EXIST.-SEE PLANS NEMA 1

POLE SPACE ckt #	CIRCUIT USE	CKT BKR RATING	CONNECTED LOAD VA A	B	C	CKT BKR RATING	CIRCUIT USE	POLE SPACE ckt #
1 1	4-W EXT NORTH AND WEST PILASTERS	20	1200 600	----- -----	----- -----	20	2-H EXT SOUTH PILASTERS	2 2
3 3	FUTURE TROLLEY GATE	20	----- -----	200 -----	----- -----	20	4-K CANOPY SOUTH	4 4
5 5	4-K CANOPY SOUTH	20	----- -----	----- 1200	1200 1200	20	4-K CANOPY SOUTH	6 6
7 7	4-K CANOPY SOUTH	20	1200 600	----- -----	----- -----	20	2-K CANOPY SOUTH	8 8
9 9	6-J TREE	20	----- -----	1200 200	----- -----	20	2-H BUILDING	10 10
11 11	3-H BUILDING	20	----- -----	----- -----	300 200	20	2-H BUILDING	12 12
13 13	2-H POLE	20	1200 600	----- -----	----- -----	20	1-H POLE	14 14
15 15	4-S BUILDING	20	----- -----	1200 600	----- -----	20	2-S BUILDING	16 16
17 17	5-J TREE	20	----- -----	----- -----	1000 1200	20	4-L CANOPY EAST	18 18
19 19	4-K CANOPY EAST	20	1200 1200	----- -----	----- -----	20	4-K CANOPY EAST	20 20
21 21	4-K CANOPY EAST	20	----- -----	1200 1200	----- -----	20	4-K CANOPY EAST	22 22
23 23	2-H POLE	20	----- -----	----- -----	1200 800	20	3-J TREE	24 24
25 25	2-H POLE	20	1200 1080	----- -----	----- -----	20	NEON SIGNS	26 26
27 27	NEON RINGS @ MEZZ.	20	----- -----	1080 400	----- -----	20	GLOBE FIXTURES @ MEZZ.	28 28
29 29	NEON RINGS @ MEZZ.	20	----- -----	----- -----	1200 800	20	SOUND EQUIPMENT	30 30
31 31	SC	20	----- -----	1200 -----	----- -----	20	2-H POLE	32 32
33 33	SC	20	----- -----	----- 1200	----- -----	20	2-H POLE	34 34
35 35	TIVOLI	20	----- -----	----- -----	1600 1600	20	TIVOLI	36 36
37 37	TIVOLI	20	1600 1600	----- -----	----- -----	20	TIVOLI	38 38
39 39	TIVOLI	20	----- -----	1600 -----	----- -----	20	SC	40 40
41 41	SC	20	----- -----	----- -----	320 320	20	UNDER COUNTER LTS.	42 42
			14280	11150 3750	11920			

PANEL LP 1 3 PH,4 WIRE, 120/208 VOLTS 200 A MCB MOUNTING FLUSH
MIN INTERRUPTING RATING VERIFY RMS SYM AMPS LOCATION EXIST.-SEE PLANS NEMA 1

POLE SPACE ckt #	CIRCUIT USE	CKT BKR RATING	CONNECTED LOAD VA A	B	C	CKT BKR RATING	CIRCUIT USE	POLE SPACE ckt #
1 1	LIGHTING 9-C	20	600 960	----- -----	----- -----	20	LIGHTING 12-E	2 2
3 3	LIGHTING 12-E	20	----- -----	960 800	----- -----	20	LIGHTING 11-E	4 4
5 5	LIGHTING 9-E	20	----- -----	----- -----	720 800	20	LIGHTING 11-E	6 6
7 7	LIGHTING 8-E	20	640 880	----- -----	----- -----	20	LIGHTING 11-E	8 8
9 9	LIGHTING 8-A, 4-B	20	----- -----	1600 800	----- -----	20	LIGHTING 19-EL	10 10
11 11	LIGHTING 12-D, 7-C	20	----- -----	----- -----	1000 720	20	LIGHTING 9-E	12 12
13 13	LIGHTING 3-T, 3-C	20	700 950	----- -----	----- -----	20	LIGHTING 80-E, 2-U	14 14
15 15	LIGHTING 13-E	20	----- -----	1100 500	----- -----	20	LIGHTING 6-E	16 16
17 17	LIGHTING 8-E, 3-C	20	----- -----	----- -----	850 700	20	LIGHTING 5-E, 2-U	18 18
19 19	LIGHTING 23-D	20	880 900	----- -----	----- -----	20	LIGHTING 11-E	20 20
21 21	LIGHTING 9-C	20	----- -----	700 600	----- -----	20	LIGHTING 10-E	22 22
23 23	LIGHTING 3-C	20	----- -----	----- -----	300 800	20	LIGHTING 12-C	24 24
25 25	LIGHTING 4-T	20	1200 750	----- -----	----- -----	20	CEILING FANS	26 26
27 27	SOFFIT LIGHTS	20	----- -----	1200 800	----- -----	20	CEILING FANS	28 28
29 29	FOUNTAIN LIGHTS *1	20	----- -----	----- -----	600 400	20	MEZZ.CEILING LIGHTS	30 30
31 31	MURAL LIGHTING	20	700 -----	----- -----	----- -----	20	MEZZ. PEND. LIGHTS.	32 32
33 33	FOUNTAIN PUMPS *1	20	----- -----	1660 200	----- -----	20	SIGNAGE POLE	34 34
35 35	FOUNTAIN FILTER *1	20	----- -----	----- -----	630 180	20	FLOOR RECEP.	36 36
37 37	FLOOR RECEP.	20	180 180	----- -----	----- -----	20	FLOOR RECEP.	38 38
39 39	FLOOR RECEP.	20	----- -----	180 180	----- -----	20	FLOOR RECEP.	40 40
41 41	LANDSCAPE LIGHTS @ FOUNTAIN *1	20	----- -----	----- -----	480 200	20	SIGNAGE POLE	42 42
			9520	11200 3250	8250			

NOTES:
*1 REPLACE BKR W/ GFI BKR

PAINT ALL EXPOSED EQUIPMENT TO MATCH.

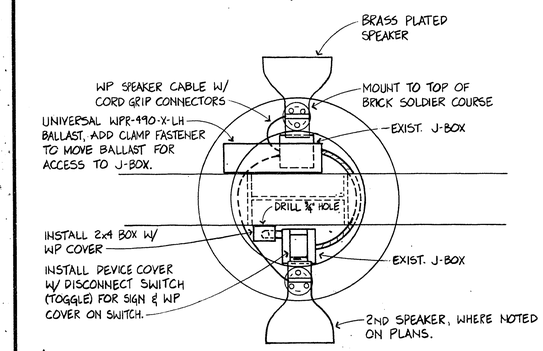

2/E5 SPEAKER MOUNTING DETAIL - PLAN VIEW
NTS

BID GROUP 2, ADDITIVE ITEM 1

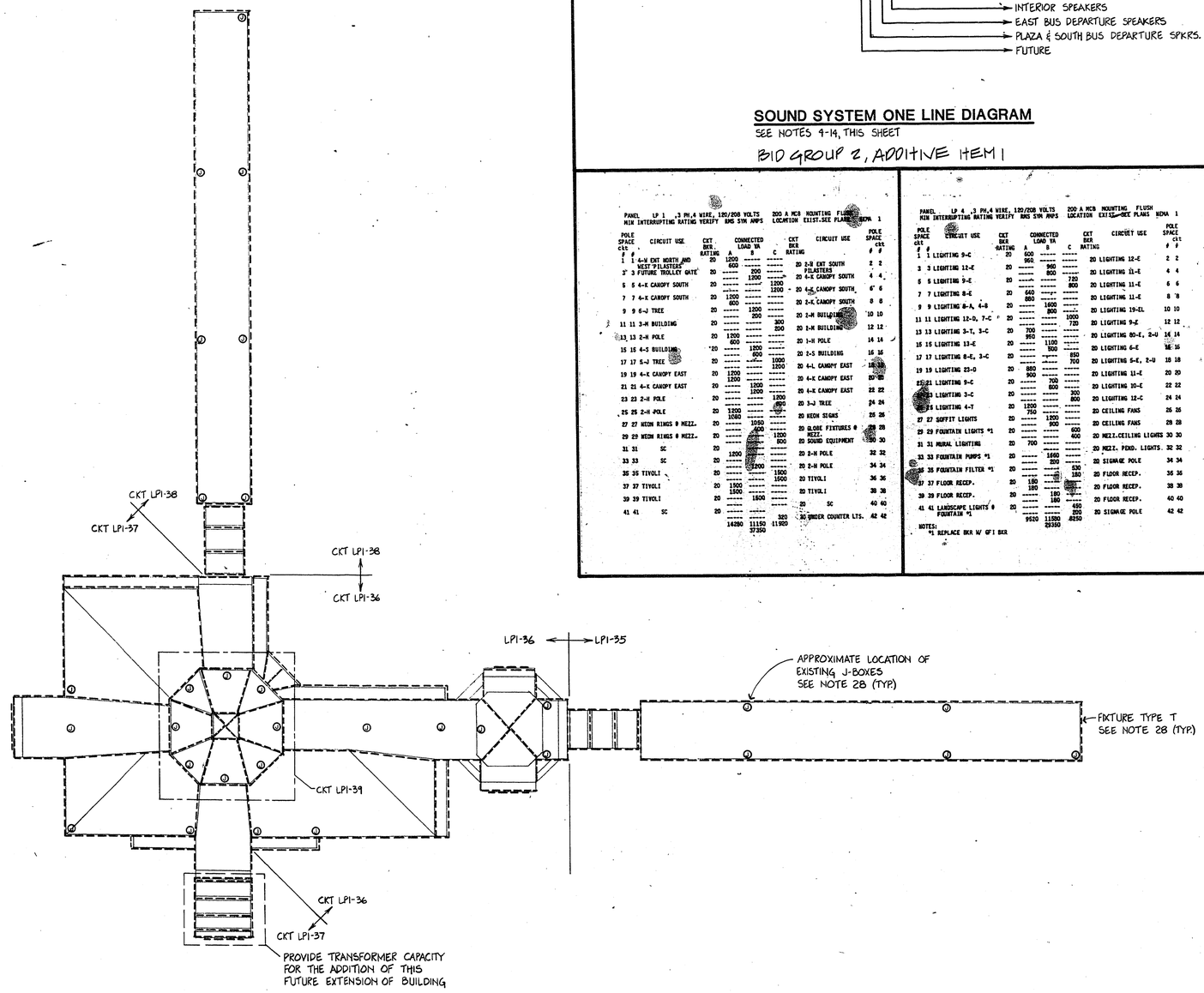

TIVOLI LIGHTING PLAN

SCALE: 1"=20'-0"

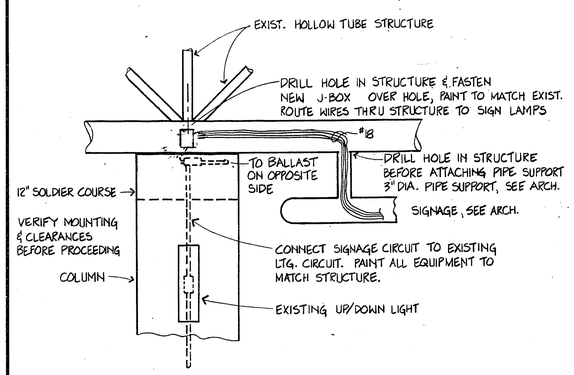

1/E5 DETAIL - SIGNAGE CONNECTION AT BUS DEPARTURE
NTS

BID GROUP 2, ADDITIVE ITEM 5

CITY OF LAS VEGAS NEVADA

City of Las Vegas, Nevada
Department of Design and Development
Thomas B. Graham, AICP, R.L.A., Director

DESIGN BY: TJK
DRAWN BY: JDE
SCALE: NOTED
DATE: 1-87

REVISIONS	DATE

DOWNTOWN TRANSPORTATION CENTER AMENITIES
EXTERIOR TIVOLI LIGHTING PLAN & DETAILS

38-13-45

PROJECT NO. WU9040
DRAWING NO. 590-2F
SHEET 41 OF 41
E5