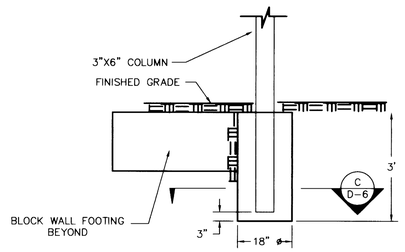

COLUMN - SECTION 13 / D-6
NOT TO SCALE

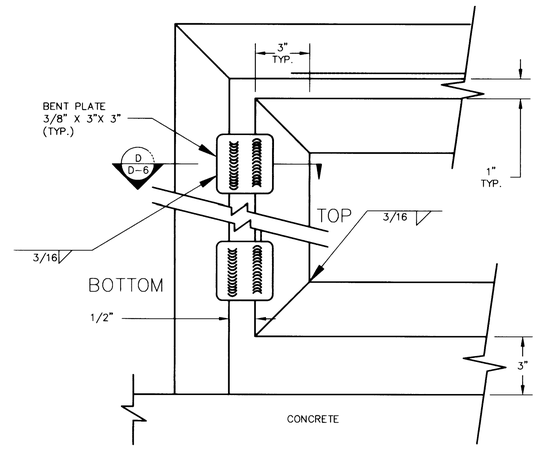

PERSONNEL GATE STOPPERS 9 / D-6
NOT TO SCALE

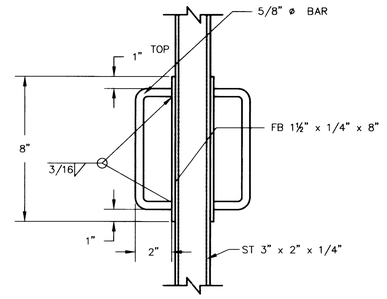

PERSONNEL GATE HANDLES 8 / D-6
NOT TO SCALE (TYPICAL ON BOTH SIDES)

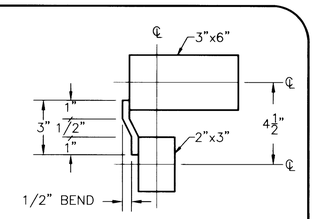

NOTE:

STOPPER PLATES TO BE WELDED TO OUTSIDE FACE OF PERSONNEL GATE.

SECTION D / D-6
NOT TO SCALE

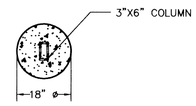

SECTION C / D-6
NOT TO SCALE

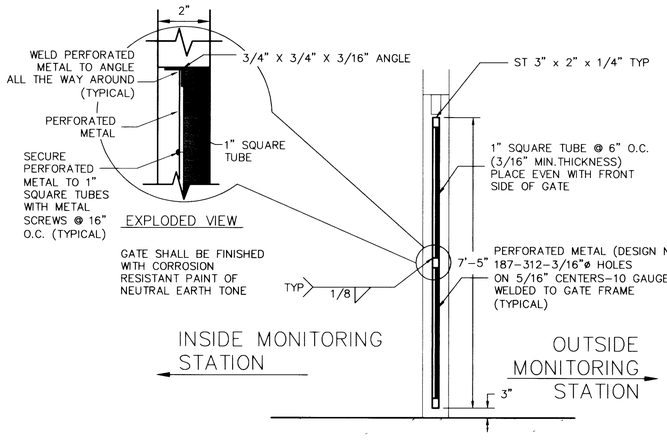

SWING GATE - SECTION 11 / D-6
1/2" = 1'-0"

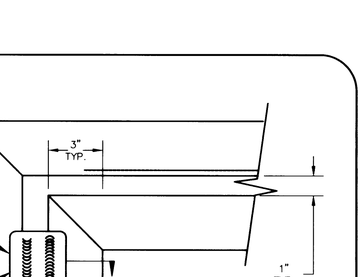

2-1/4" DIAMETER HALF CHAIN LINKS FOR PADLOCKING GATE. ONE LINK WELDED TO GATE AND ONE LINK WELDED TO POST. AS SHOWN

HASP ASSEMBLY 7 / D-6
NOT TO SCALE

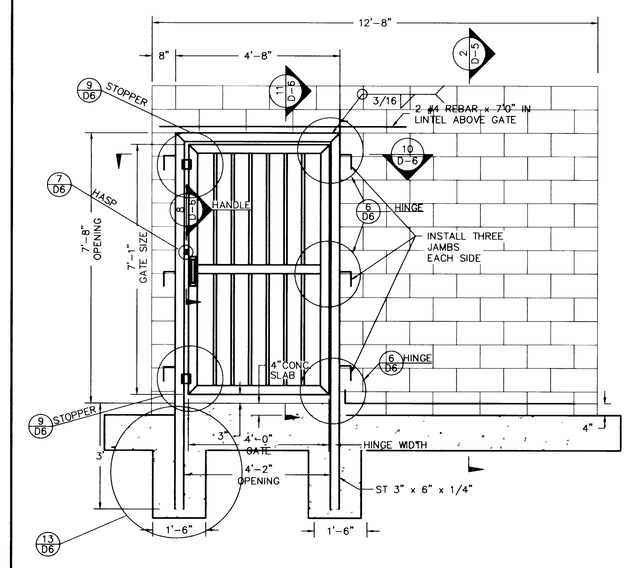

PERSONNEL GATE B / D-6
NOT TO SCALE

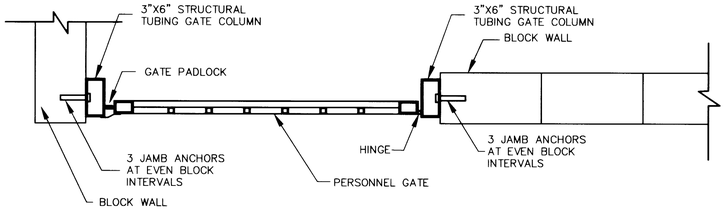

FRAME CROSS-SECTION 10 / D-6
NOT TO SCALE

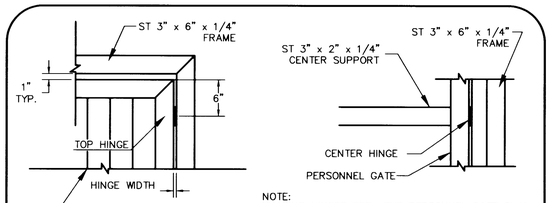

NOTE:
BEARING HINGES FOR THE PERSONNEL GATE SHALL BE 83353 BARREL TYPE BALL BEARING AS SUPPLIED BY BUILDERS FENCE COMPANY OR APPROVED EQUAL.

PERSONNEL GATE HINGE DETAIL 6 / D-6
NOT TO SCALE

32582

STATE OF NEVADA PROFESSIONAL ENGINEER DENNIS R. BROWN No. 12212 CIVIL
DATE: May 23, 2001

REV	DATE	DESCRIPTION	DATE AGEN. APP	DATE CCW. APP

DESIGN:
DRAWN:
CHECK:
ISSUE DATE:
ISSUE EDITOR:
PLOT DATE: 05-23-01
PLOT TIME: 08:31:53
Dbrown

G. C. WALLACE, INC.
Engineering/Architecture
1555 SOUTH RAINBOW BLVD./LAS VEGAS, NEVADA 89146
TEL (702) 804-2000 • FAX (702) 804-2799
G:\62052-307\dwg\mprov2\QB5_D006.dwg

THE HOWARD HUGHES CORPORATION
DETENTION BASIN NO. 5 EXPANSION AND DIVERSION BERM
MONITORING STATION PERSONNEL GATE DETAILS

SHEET
D-6
21 OF 24 SHTS

731-75