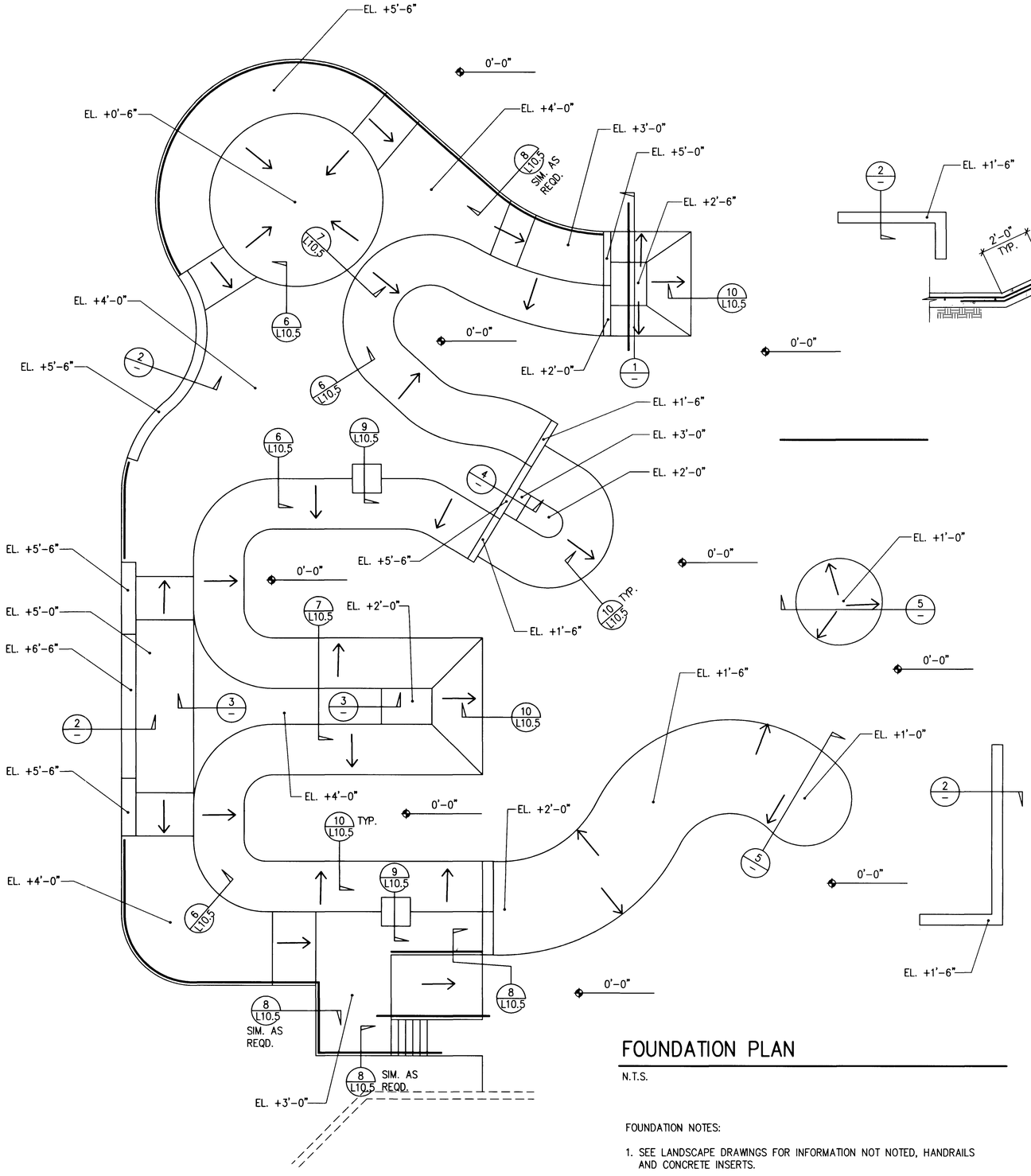

FOUNDATION PLAN

N.T.S.

FOUNDATION NOTES:

1. SEE LANDSCAPE DRAWINGS FOR INFORMATION NOT NOTED, HANDRAILS AND CONCRETE INSERTS.
2. SLAB ON GRADE SHALL BE 4" THICK WITH #3 AT 14" OC EACH WAY. FOR JOINT DETAILS SEE 1/L10.5.
3. SEE SOIL REPORT BY NINYO & MOORE FOR SUBGRADE PREPARATION.

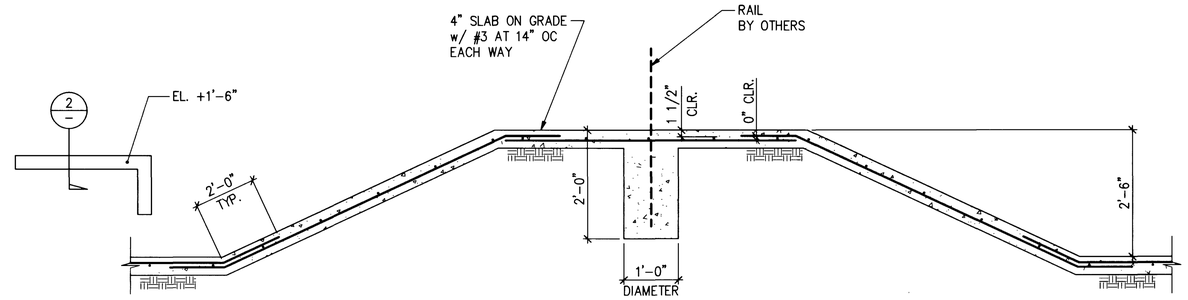

SECTION 1

3/4" = 1'-0"

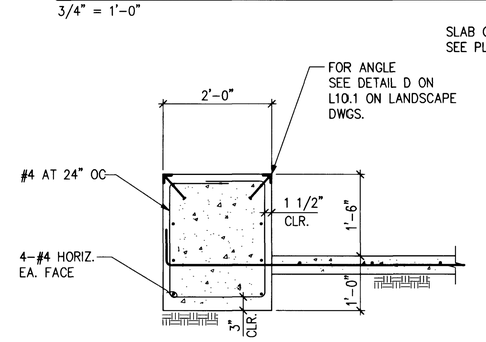

SECTION 2

3/4" = 1'-0"

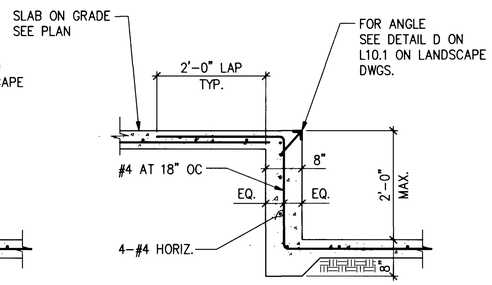

SECTION 3

3/4" = 1'-0"

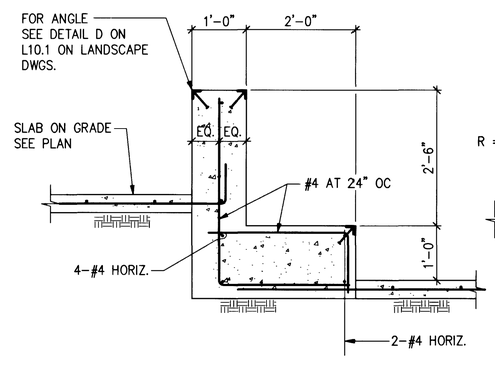

SECTION 4

3/4" = 1'-0"

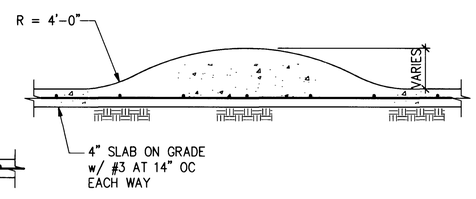

SECTION 5

3/4" = 1'-0"

CITY OF LAS VEGAS NEVADA

REVISIONS

CONSULTANT

800 PILOT ROAD, SUITE A
LAS VEGAS, NEVADA 89119
(702) 362-7777

MARTIN & FELTYN, INC.
STRUCTURAL ENGINEERS
1909 SOUTH JONES BLVD.
LAS VEGAS, NV 89146
PHONE (702) 248-7000
FAX (702) 253-5353
JOB NO. 5066

ELKHORN SPRINGS
NEIGHBORHOOD PARK
BUFFALO DRIVE
SKATE PARK STRUCTURAL
FOUNDATION PLAN
AND SECTIONS

STAMP

OWNER: CITY OF LAS VEGAS
DEPARTMENT OF PUBLIC WORKS
ARCHITECTURAL SERVICES

400 EAST STEWART AVENUE
LAS VEGAS, NEVADA 89101
PHONE: (702) 229-5535
FAX: (702) 382-5232
TDD: (702) 386-9108

DRAWN	CMR
FILE	
DATE	3-12-01
SCALE	
BID NO	01.15301.16
CLV DWG NO	650.64
	63 of 90
SHT NO	L10.4

DRAWINGS AS INSTRUMENTS OF SERVICE ARE THE PROPERTY OF THE DESIGN PROFESSIONAL. WHOSE STAMP OF CERTIFICATION APPEARS ON THE DRAWINGS AND SPECIFICATIONS ANY USE OR REPRODUCTION IN WHOLE OR IN PART WITHOUT WRITTEN CONSENT IS STRICTLY PROHIBITED COPIES OF THE DRAWINGS AND SPECIFICATIONS RETAINED BY THE CLIENT MAY BE UTILIZED ONLY FOR OCCUPYING THE PROJECT FOR WHICH THEY WERE PREPARED AND NOT FOR THE CONSTRUCTION OF ANY OTHER PROJECT N.A.C. 623.780

48273

H:\CAD\5066\DWGS\5066L104.dwg, 03/20/02 04:32:05 PM, bhaught