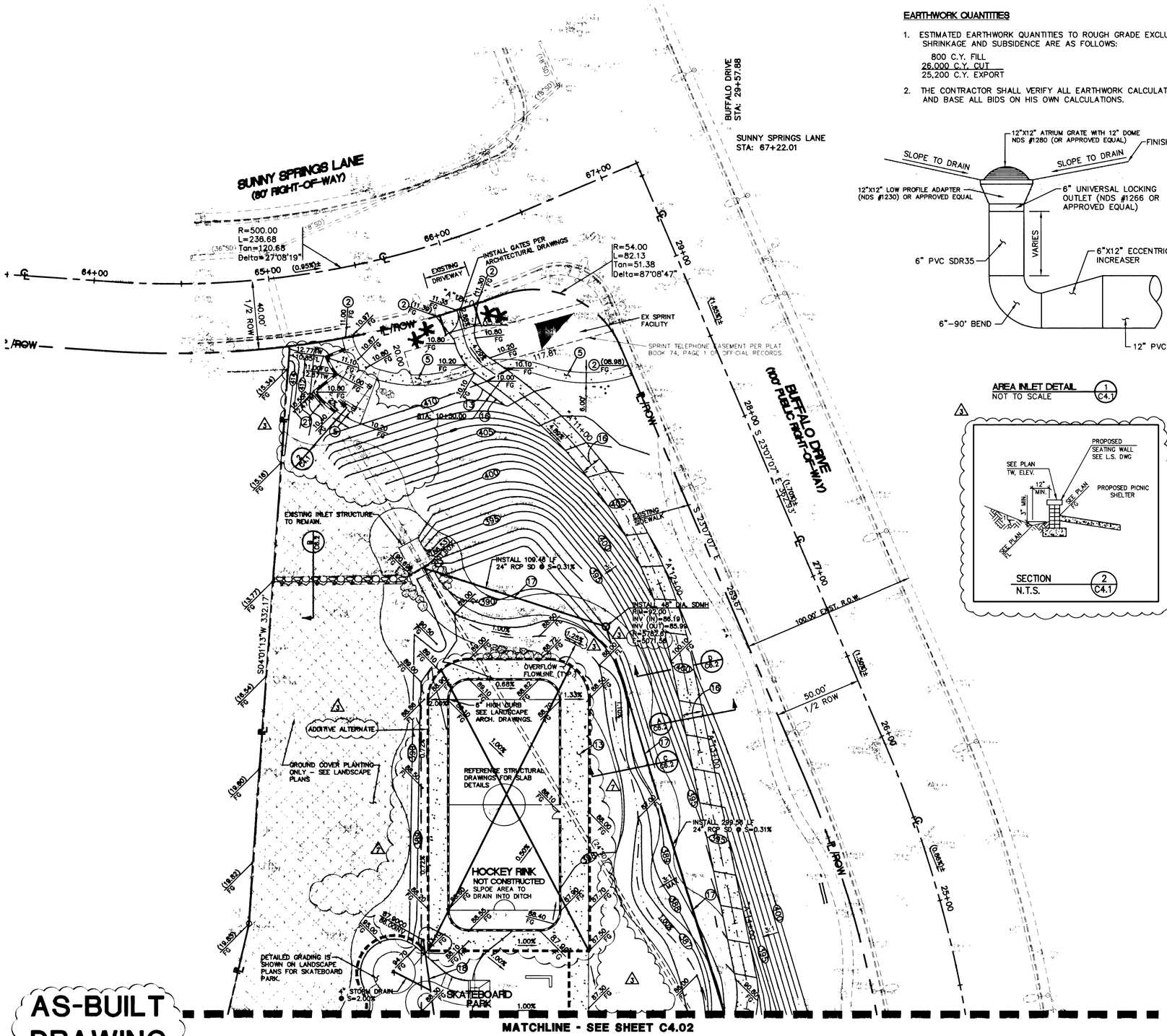

EARTHWORK QUANTITIES

1. ESTIMATED EARTHWORK QUANTITIES TO ROUGH GRADE EXCLUDING SHRINKAGE AND SUBSIDENCE ARE AS FOLLOWS:

   800 C.Y. FILL
   26,000 C.Y. CUT
   25,200 C.Y. EXPORT

2. THE CONTRACTOR SHALL VERIFY ALL EARTHWORK CALCULATIONS AND BASE ALL BIDS ON HIS OWN CALCULATIONS.

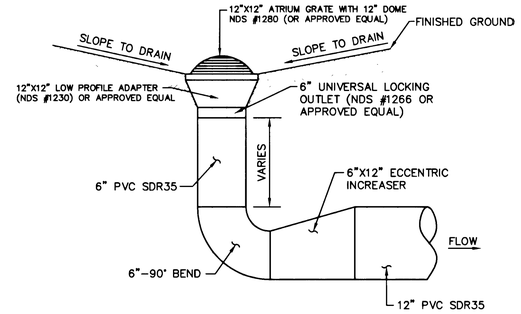

AREA INLET DETAIL (1 / C4.1)
NOT TO SCALE

SECTION (2 / C4.1)
N.T.S.

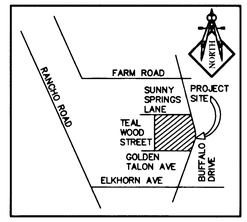

AREA MAP
NO SCALE

GRAPHIC SCALE

30 0 15 30 60 120

(IN FEET)
1 inch = 30 ft.

APN: 125-16-813-003, 711-002 (3)

BASIS OF BEARING

S 23°07'07" E BEING THE CENTERLINE OF BUFFALO DRIVE AS PER PLAT BOOK 74, PAGE 1 OF CLARK COUNTY OFFICIAL RECORDS.

BENCHMARK

CITY OF LAS VEGAS STATION #1LV90 22W6, BEING A RIVET AND PLATE ON POWER-TRANS PAD, 7535 W. DEER SPRINGS ROAD, 500' E OF BUFFALO DRIVE.

ELEV: 2388.00' NAVD88

GRADING NOTES

1. SLOPES 4:1 OR STEEPER AND FINE-GRAINED MATERIALS THAT HAVE BEEN DISTURBED (SANDY AND SILTY MATERIALS) SHOULD BE PROTECTED WITH BURLAP OR OTHER EROSION CONTROL FABRIC/MATERIAL, UNLESS OTHERWISE SPECIFIED BY LANDSCAPE DRAWINGS AND SPECIFICATIONS OR THE SOILS REPORT.
2. CONTRACTOR SHALL DETERMINE HIS OWN FOOTING OR BASEMENT EXCAVATION QUANTITIES, EVEN THOUGH SHOWN ON ROUGH GRADING PLANS. ADDITIONALLY, STRUCTURE BACKFILL COSTS SHOULD BE INCLUDED IN THE COST OF THE STRUCTURE, UNLESS OTHERWISE SPECIFIED IN THE CONTRACT DOCUMENTS.
3. CONTRACTOR SHALL NOTIFY LOCHSA ENGINEERING WITHIN 24 HOURS OF OMISSIONS AND ERRORS DISCOVERED ON PLANS. LOCHSA ENGINEERING WILL NOT BE RESPONSIBLE FOR ANY "CORRECTIVE" WORK DONE BY OTHERS.
4. CONTRACTOR TO ENSURE POSITIVE DRAINAGE. NO PONDING ALLOWED.
5. CONTRACTOR TO FOLLOW RECOMMENDATIONS AS OUTLINED IN THE PROJECT GEOTECHNICAL REPORT, INCLUDING BUT NOT LIMITED TO EXCAVATION, GRADING AND COMPACTION. REFER TO GEOTECHNICAL EVALUATION ELKHORN SPRINGS PARK, PROJECT NUMBER 300679-01 DATED JANUARY 8, 2001 PREPARED BY NINYO AND MOORE GEOTECHNICAL AND ENVIRONMENTAL SCIENCES CONSULTANTS.
6. SLOPES SHALL BE STABILIZED PER LANDSCAPE ARCHITECTURAL DRAWINGS PREPARED BY J.W. ZUNINO AND ASSOCIATES.

CONSTRUCTION NOTES

1. SAWCUT AND MATCH EXISTING A.C. PAVEMENT.
2. MATCH EXISTING FINISHED GRADE.
3. CONSTRUCT "L" TYPE CURB AND GUTTER PER DETAIL (1 / C6.1)
4. CONSTRUCT "A" TYPE CURB PER DETAIL (1 / C6.1)
5. CONSTRUCT CONCRETE SIDEWALK PER DETAIL (6 / C6.1)
6. NOT USED (3)
7. CONSTRUCT COMMERCIAL DRIVEWAY PER STD. DWG. NO. 222A.
8. INSTALL A.C. PAVEMENT PER DETAIL (3 / C6.1)
9. CONSTRUCT SIDEWALK ACCESS RAMP PER DETAIL (7 / C6.1)
10. NOT USED (3)
11. NOT USED
12. CONSTRUCT CONCRETE STAIRS PER DETAIL (10 / C6.1)
13. CONSTRUCT CONCRETE SECTION PER DETAIL (4 / C6.1)
14. NOT USED (3)
15. CONSTRUCT 8' CROSS GUTTER PER DETAIL (5 / C6.1)
16. CONSTRUCT 12' WIDE CONCRETE ACCESS ROAD SEE DETAIL (A / C6.2) AND SHEET C4.4 FOR ACCESS ROAD PLAN AND PROFILE.
17. REFERENCE SHEET C4.6 FOR 24" RCP STORM DRAIN PROFILE.
18. REFERENCE SHEET C4.5 FOR 12" PVC STORM DRAIN PROFILE.
19. NOT USED (3)
20. INSTALL CONCRETE HEADWALL PER DETAIL (F / C6.2)
21. PROPOSED SEATING WALL - SEE L.S. DWGS FOR DETAILS. (3)
22. PROPOSED MOW CURB - SEE L.S. DWGS FOR DETAILS.

LEGEND

EXISTING	PROPOSED	EXISTING	PROPOSED	EXISTING	PROPOSED	EXISTING	PROPOSED
	RIGHT-OF-WAY		METERS / PULL BOXES		RETAINING WALL	(6.00) TC	0.00 TC — TOP OF CURB
	CENTERLINE		REDUCER		SAWCUT LINE	(0.00) TOW	0.00 TOW — TOP OF WALL
	PROPERTY LINE		MANHOLE		FENCE		GATE
(W)	W — WATER LINE	CO	CLEANOUT		SCARP		SIGN
(SS)	SS — SANITARY SEWER LINE	(00)	CONTOUR		GRADE BREAK		STREET LIGHTS
(G)	G — GAS LINE		A.C. PAVING	FF=0.00	FINISH FLOOR		100 W H.P.S.
(SD)	SD — STORM DRAIN		TYPE "L" CURB & GUTTER	0.00 C.O. INV	CLEANOUT INVERT ELEVATION		150 W H.P.S.
(E)	E — POWER LINE / POWER POLE		TYPE "A" CURB	0.00%	FLOW DIRECTION		200 W H.P.S.
(T)	T — TELEPHONE LINE	(0.00) FG	CONCRETE	0.00 FG	FINISH GRADE		250 W H.P.S.
	FIRE HYDRANT						
	WATER VALVE						

AVOID CUTTING UNDERGROUND UTILITY LINES. IT'S COSTLY.
Call before you Dig-
1-800-227-2600
UNDERGROUND SERVICE ALERT (U.S.A.)

AVOID OVERHEAD POWER LINE CONTACT
Call before you OVERHEAD
1-702-593-6111
NEVADA POWER ENVIRONMENT AND SAFETY SERVICES DEPARTMENT

LOCHSA ENGINEERING ASSUMES NO RESPONSIBILITY FOR EXISTING UTILITY LOCATIONS AND ELEVATIONS. THE UTILITIES SHOWN ON THIS DRAWING HAVE BEEN PLOTTED FROM THE BEST AVAILABLE INFORMATION. IT IS, HOWEVER, THE CONTRACTORS RESPONSIBILITY TO FIELD VERIFY THE LOCATION AND ELEVATION OF ALL UTILITIES PRIOR TO THE COMMENCEMENT OF ANY CONSTRUCTION. CONTRACTOR TO FIELD VERIFY ALL EXISTING SITE CONDITIONS PRIOR TO CONSTRUCTION. IF A CONFLICT EXISTS BETWEEN WHAT IS SHOWN ON THESE DRAWINGS AND WHAT EXIST IN THE FIELD, THE CONTRACTOR IS TO NOTIFY THE ARCHITECT, OWNER'S REPRESENTATIVE OR ENGINEER IMMEDIATELY.

AS-BUILT DRAWING

This record drawing, dated February 25, 2002, has been prepared, in part, based upon information furnished by others. While this information is believed to be reliable, Lochsa Engineering, cannot assure its accuracy, and thus is not responsible for the accuracy of this record drawing or for any errors or omissions which may have been incorporated into it as a result. Those relying on this record document are advised to obtain independant verification of its accuracy before applying it for any purpose. (7)

48221

CITY OF LAS VEGAS NEVADA

REVISIONS
3 ADDENDUM #2, 05-10-01
2 AS-BUILT DRAWINGS

CONSULTANT
LUCCHESI GALATI ARCHITECTS
500 PILOT ROAD, SUITE A
LAS VEGAS, NEVADA 89119
(702) 269-7711

LOCHSA ENGINEERING
5828 Spring Mountain Rd.
Suite 308
Las Vegas, Nevada. 89146
Phone (702) 365-9312
Fax (702) 365-9317

DEPARTMENT OF PUBLIC WORKS

ELKHORN SPRINGS NEIGHBORHOOD PARK
BUFFALO DRIVE
GRADING PLAN
(1 OF 3)

STAMP

OWNER: CITY OF LAS VEGAS
DEPARTMENT OF PUBLIC WORKS
ARCHITECTURAL SERVICES
400 EAST STEWART AVENUE
LAS VEGAS, NEVADA 89101
PHONE: (702) 229-6535
FAX: (702) 382-3232
TDD: (702) 386-9108

DRAWN	MMF.
FILE	646-4GPL.DWG
DATE	MARCH 9, 2001
SCALE	1"=30'
BID NO	01.15301.16
CLV DWG NO	650.64
SHT NO	11 of 90
	C4.1

DRAWINGS AS INSTRUMENTS OF SERVICE ARE THE PROPERTY OF THE DESIGN PROFESSIONAL WHOSE STAMP OF CERTIFICATION APPEARS ON THE DRAWINGS AND SPECIFICATIONS. ANY USE OR REPRODUCTION IN WHOLE OR IN PART WITHOUT WRITTEN CONSENT IS STRICTLY PROHIBITED EXPECT OF THE OWNER PROJECT A.A.C. 63.3.700

\CAD\646\dwgs\AS-BUILT\646gpl.dwg Tue Feb 26 12:54:16 2002 BRIAN