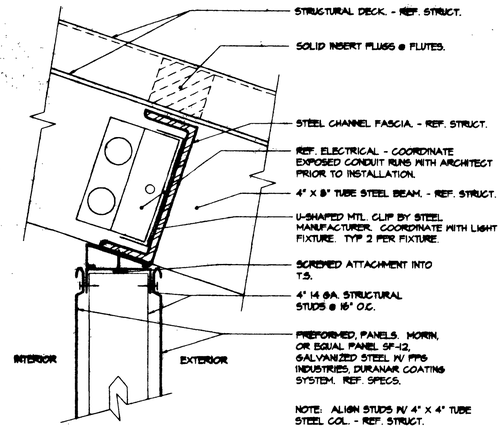

1 Detail @ Chase Wall
Scale: 3"=1'-0" 05100-XX A7-01

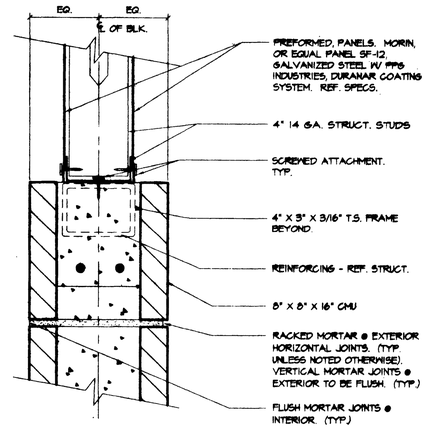

2 Head @ Block Wall
Scale: 3"=1'-0" 05100-XX A7-02

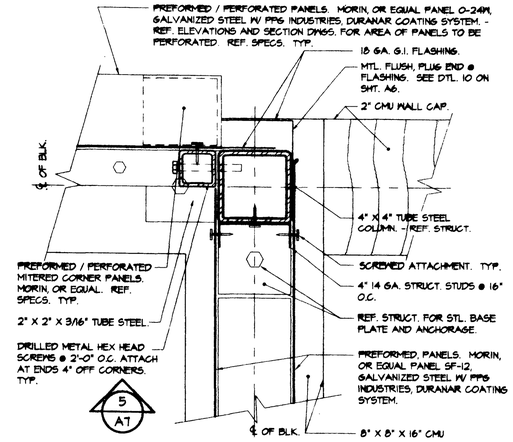

3 Corner Detail @ Column (Low)
Scale: 3"=1'-0" 05100-XX A7-03

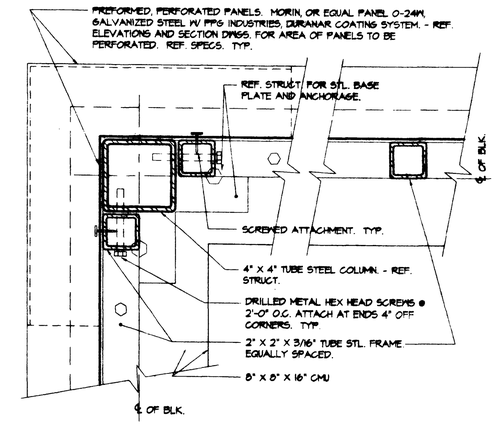

4 Corner Detail @ Perforated Metal
Scale: 3"=1'-0" 05100-XX A7-04

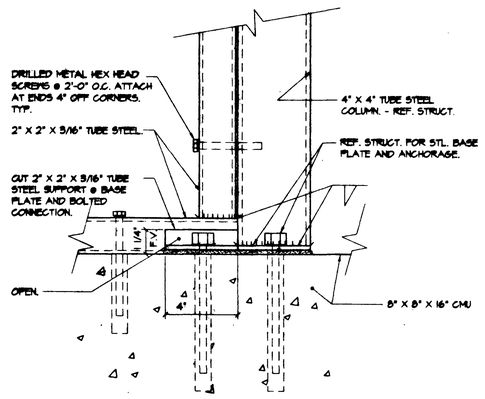

5 Elevation @ T.S. Corner (Conn.)
Scale: 3"=1'-0" 05100-XX A7-05

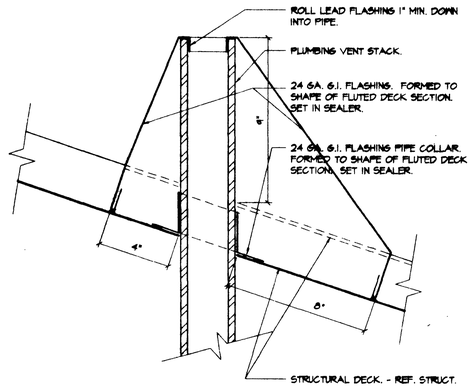

6 Vent Stack Flashing
Scale: 3"=1'-0" 07620-XX A7-06

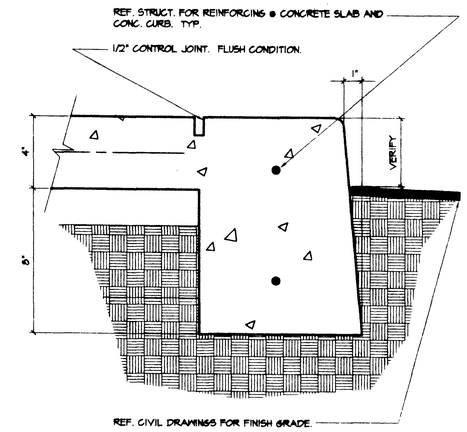

7 Conc. Curb & Conc. Floor Condition
Scale: 3"=1'-0" 03000-xx A7-07

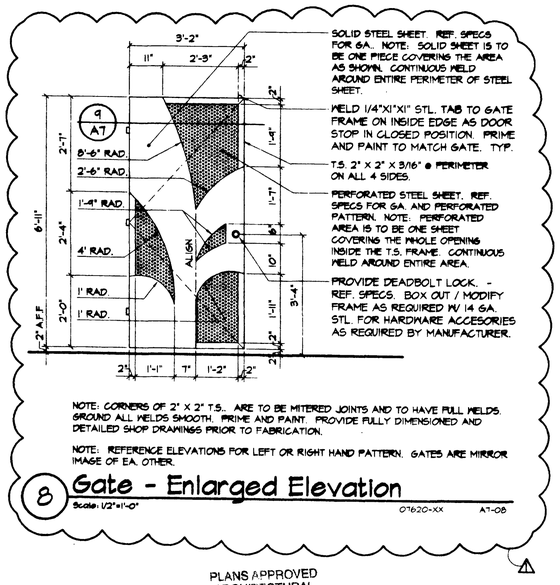

8 Gate - Enlarged Elevation
Scale: 1/2"=1'-0" 07620-XX A7-08

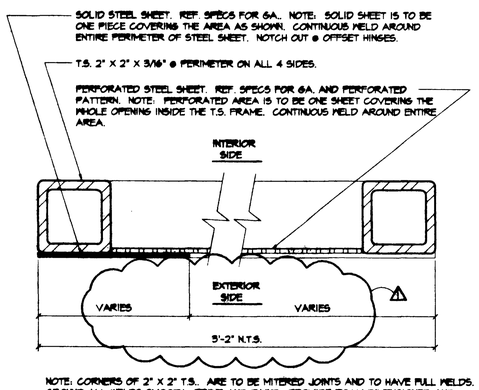

9 Section @ Gate
Scale: 6"=1'-0" 05100-XX A7-09

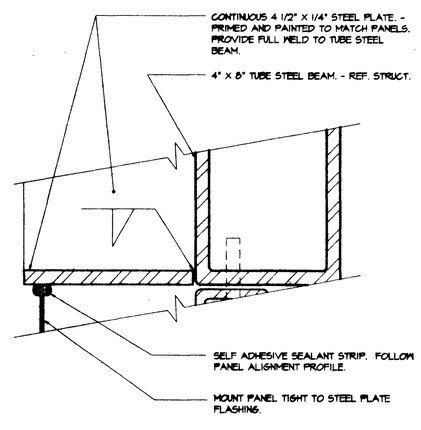

10 Self Adhesive Sealant Strip Dtl.
Scale: 6"=1'-0" 05100-XX A7-10

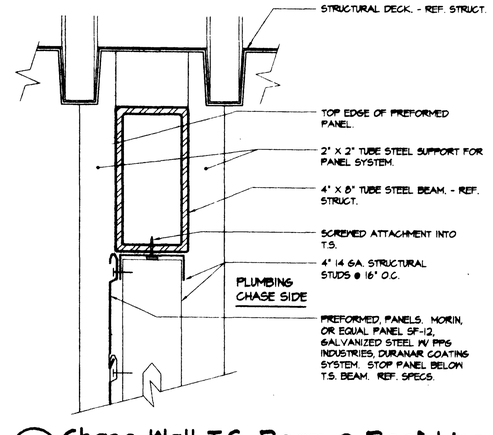

11 Chase Wall T.S. Beam @ Roof Line
Scale: 3"=1'-0" 05100-XX A7-11

48294

PLANS APPROVED
ARCHITECTURAL
Building & Safety Dept.
City of Las Vegas, Nevada

MJH AUG 31 2001

Does Not Include Structural, Electrical, Plumbing/Mechanical or On-Site Improvements. Make No Change Without Approval. Plan is Not a Permit to Violate Any Ordinance

APPROVAL IS FOR CLOUDED AREAS OR LATEST REVISIONS ONLY. SEE ORIGINALS FOR OTHER REQUIREMENTS.

CITY OF LAS VEGAS NEVADA

REVISIONS
1 Arch't Revisions 7/19/01

CONSULTANT

DEPARTMENT OF PUBLIC WORKS

Elkhorn Springs Park
Restroom Facility (Prototype One) -

Miscellaneous Details

AUG 30 2001

STAMP

RICHARD D. DANIELSON
REGISTERED
No. 1757
ARCHITECT
STATE OF NEVADA
21 JULY 01

OWNER: CITY OF LAS VEGAS
DEPARTMENT OF PUBLIC WORKS
ARCHITECTURAL SERVICES

400 EAST STEWART AVENUE
LAS VEGAS, NEVADA 89101
PHONE: (702) 229-6535
FAX: (702) 382-3232
TDD: (702) 386-9108

DRAWN	DDREED
FILE	elkhorn springs/esp01a7
DATE	3/14/01
SCALE	Full Scale
STD NO	01.15301.16
CLV DWG NO	650.64
	84 of 90
SHT NO	RR-A7

DRAWING IS INSTRUMENTS OF SERVICE AND THE PROPERTY OF THE DESIGN PROFESSIONAL. REUSE, STAMP OF CERTIFICATION, SALE OR LEASE OF DRAWINGS AND SPECIFICATIONS BY AN OWNER OR ANY OTHER PERSON IS PROHIBITED WITHOUT THE WRITTEN CONSENT OF THE DESIGN PROFESSIONAL. REUSE OF DRAWINGS AND SPECIFICATIONS BY THE OWNER FOR ANY PURPOSE OTHER THAN THE PROJECT FOR WHICH THEY WERE PREPARED IS NOT AUTHORIZED WITHOUT THE WRITTEN CONSENT OF THE DESIGN PROFESSIONAL. REUSE BY THE OWNER FOR ANY OTHER PROJECT IS A VIOLATION OF LAW.