29-15-41

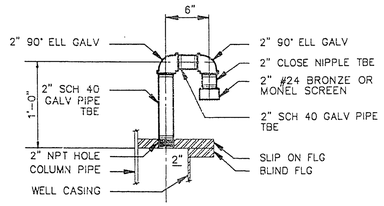

VENT PIPE (1)

NOT TO SCALE

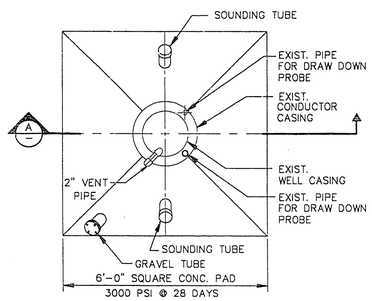

WELL HEAD AND PAD DETAIL (2)

SCALE: 1/2" = 1'-0"

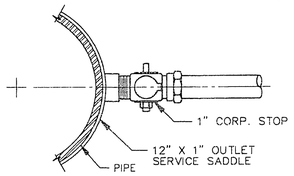

WATER SERVICE ASSEMBLY (4)

NOT TO SCALE

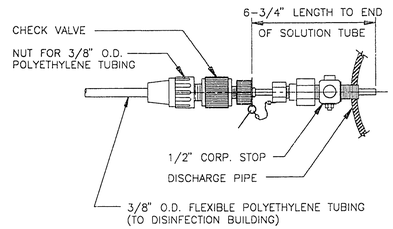

NOTE: ALSO SEE DETAIL 5 ON SHEET E9.

CHLORINE DIFFUSER ASSEMBLY (6)

NOT TO SCALE

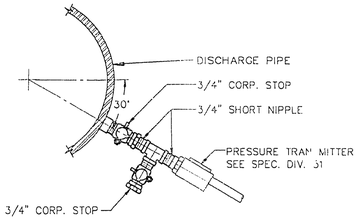

NOTE: ALL SHORT NIPPLES SHALL BE BRASS

PRESSURE CONNECTION DETAIL (5)

NOT TO SCALE

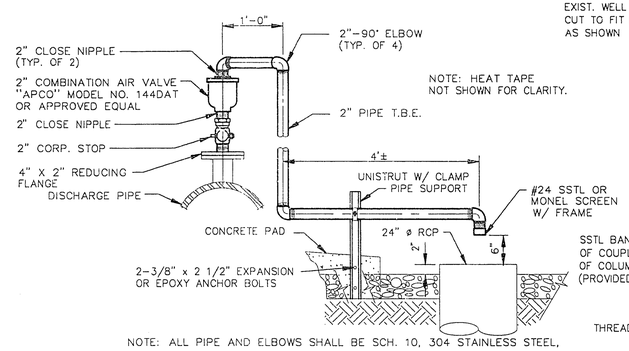

NOTE: HEAT TAPE NOT SHOWN FOR CLARITY.

NOTE: ALL PIPE AND ELBOWS SHALL BE SCH. 10, 304 STAINLESS STEEL.

COMBINATION AIR VALVE (7)

NOT TO SCALE

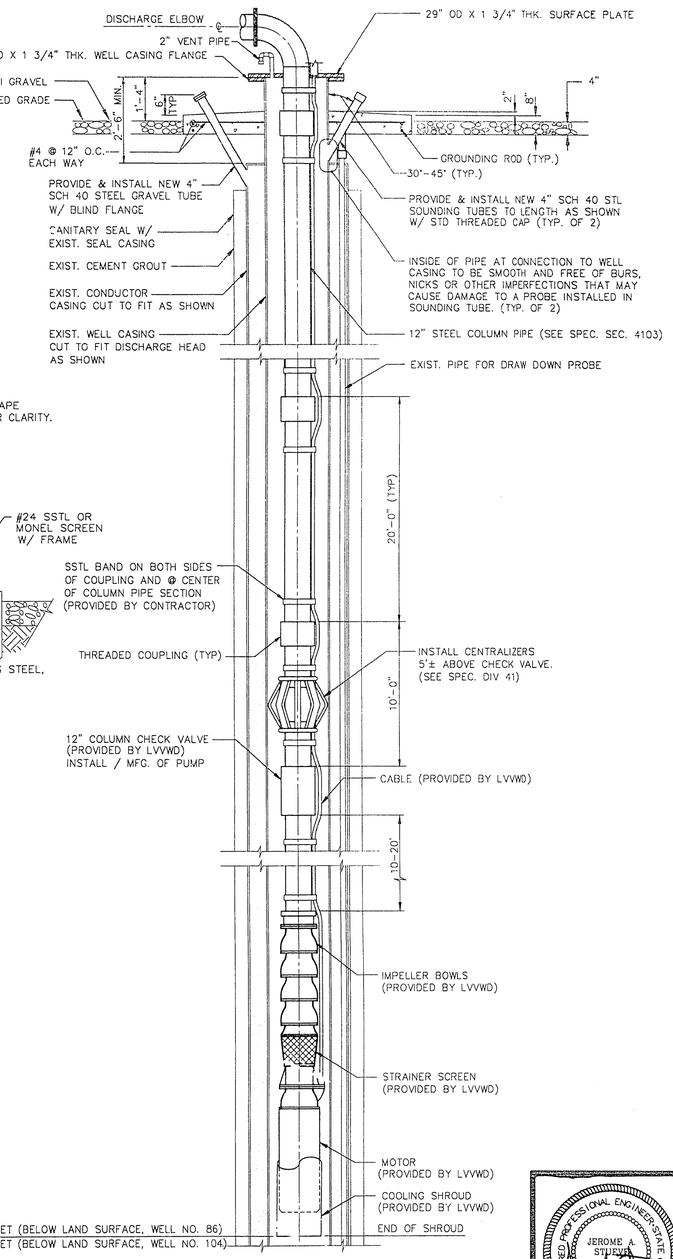

SUBMERSIBLE PUMP SECTION (A)

NOT TO SCALE

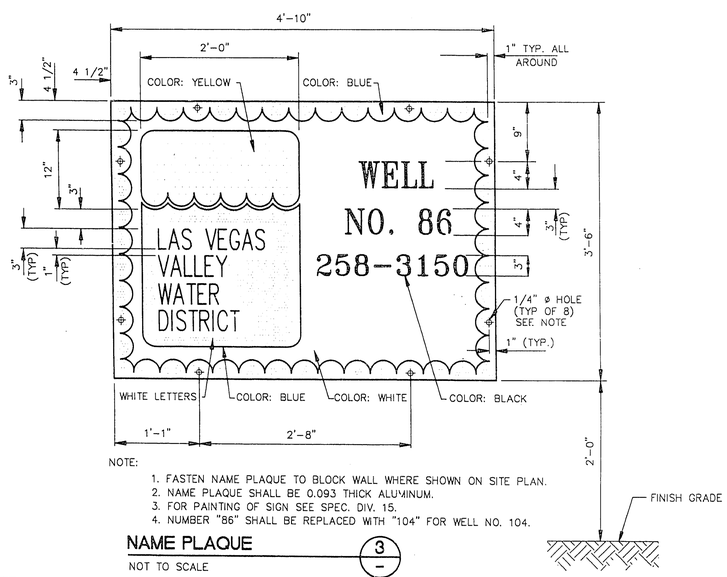

NOTE:

1. FASTEN NAME PLAQUE TO BLOCK WALL WHERE SHOWN ON SITE PLAN.
2. NAME PLAQUE SHALL BE 0.093 THICK ALUMINUM.
3. FOR PAINTING OF SIGN SEE SPEC. DIV. 15.
4. NUMBER "86" SHALL BE REPLACED WITH "104" FOR WELL NO. 104.

NAME PLAQUE (3)

NOT TO SCALE

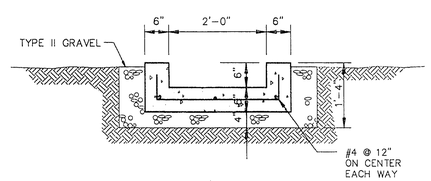

DRAINAGE CHANNEL (8)

NOT TO SCALE

REV.	DESCRIPTION	BY	DATE	CHKD.

SCALE: AS SHOWN

FILE NAME: C0751C11 DATE: 05/26/95
DRAWN: G. BOSIA DATE: 05/26/95
CHECKED: G. E. WALLACE DATE: 6/20/95

RECOMMENDED: JEROME A. STUEVE — 10618 RPE NO. — 7-10-95 DATE
APPROVED: SHAWN P. HOLLUS — 9651 RPE NO. — 7-25-95 DATE

LAS VEGAS VALLEY WATER DISTRICT
1001 SOUTH VALLEY VIEW BOULEVARD
LAS VEGAS, NEVADA 89153

EQUIP WELL NOS. [illegible] 104

MISCELLANEOUS DETAILS

REGISTERED PROFESSIONAL ENGINEER STATE OF NEVADA JEROME A. STUEVE No. 10618 CIVIL

DRAWING NUMBER 751
REF. SHEET NO. C11
SHEET 11 OF 31

NO75111.TIF

I:\CONTRACT\C0751\C0751C11.dwg Plot @ 07/24/95 09:11

F-3 QS-324, QS-729 138-09-SF. 565-268