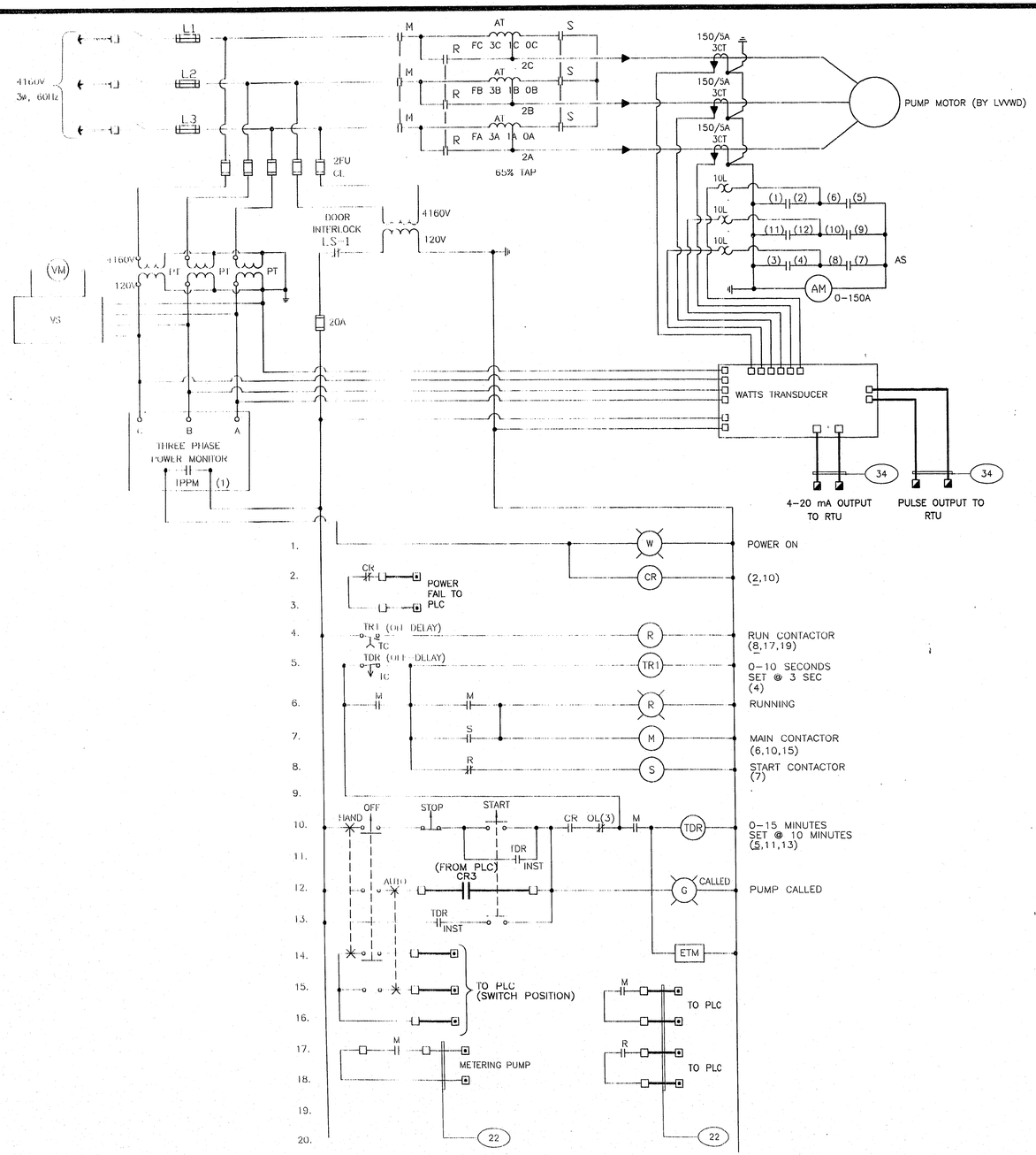

MCC SCHEMATIC DIAGRAM (1)

SCALE-NONE

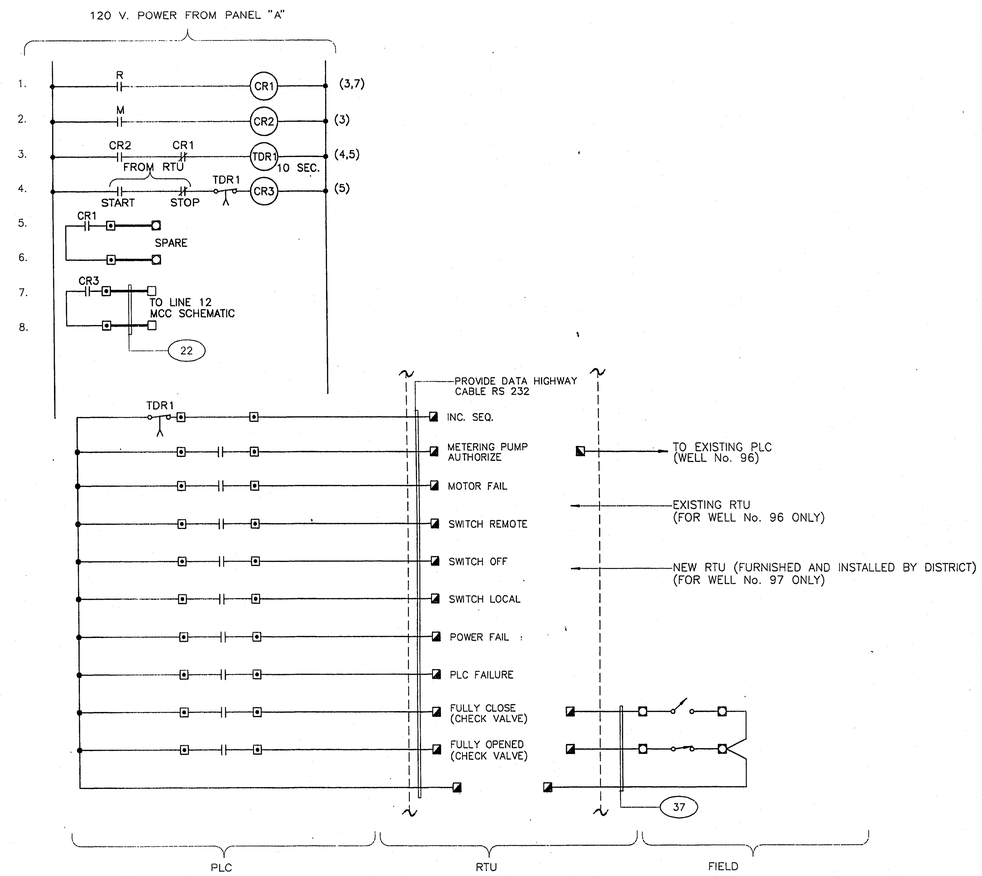

NOTE: THE LOGIC SHOWN USING RELAYS AND TIMERS FOR CLARITY SHALL BE IMPLEMENTED USING A PROGRAMMABLE LOGIC CONTROLLER AS NOTED IN THE SPECIFICATIONS.

PLC SCHEMATIC DIAGRAM (2)

SCALE-NONE

REGISTERED PROFESSIONAL ENGINEER STATE OF NEVADA
D. KEITH BAIRD
EE/P
No. 8389

12-13-94

REV.	DESCRIPTION	BY	DATE	CHK'D

SCALE: HORIZ. NONE VERT. NONE

FILE NAME: C0717E14.DWG DATE: 08/01/94
DRAWN: J. E. SALDANA DATE: 08/01/94
CHECKED: D.K.B. DATE: 08/01/94

RECOMMENDED: JAVIER Q. ARCEO DATE
APPROVED: D. Keith Baird 8389 12-13-94
D. KEITH BAIRD R.P.E. NO. DATE

LAS VEGAS VALLEY WATER DISTRICT
3700 WEST CHARLESTON BOULEVARD
LAS VEGAS, NEVADA

EQUIP WELL No.s 96 AND 97

WELL No.s 96 AND 97
SCHEMATIC DIAGRAMS

DRAWING NUMBER 717
REF. SHEET NO. E14
SHEET 28 OF 32

I:\ACAD\DRAWINGS\CONTRACT\C0717\C0717E14.dwg Plot @ 11/15/94 11:40

26-28

e-3 QS-396 138-27-SE 565-245