NOTES:

1. INSTALL VALVES CLOSED.
2. COAT OUTLET AND VALVE PER SPECS. SEC. 09800.
3. WRAP OUTLET AND VALVE WITH TWO LAYERS OF POLYETHYLENE FILM PER SPECS. SEC. 09800.
4. LENGTH & SIZE VARY, SEE PLAN. USE SHORT LENGTH CLASS 150 ACP OR PVC OR CLASS 50 DIM FOR FIRST PIPE STUB ADJOINING GATE VALVE.
5. INSTALL CARSONITE MARKER (YELLOW) ADJACENT TO VALVE BOX.

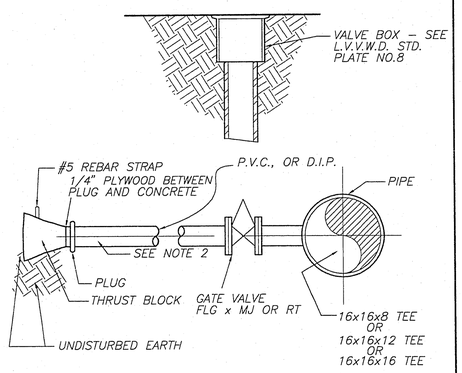

OUTLET DETAIL TYPE "C"

N.T.S.

10 / 1

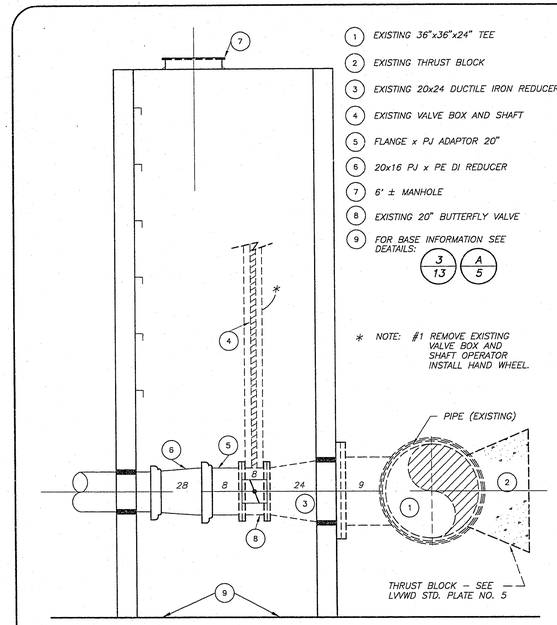

20" CONNECTION DETAIL

N.T.S.

10 / 2

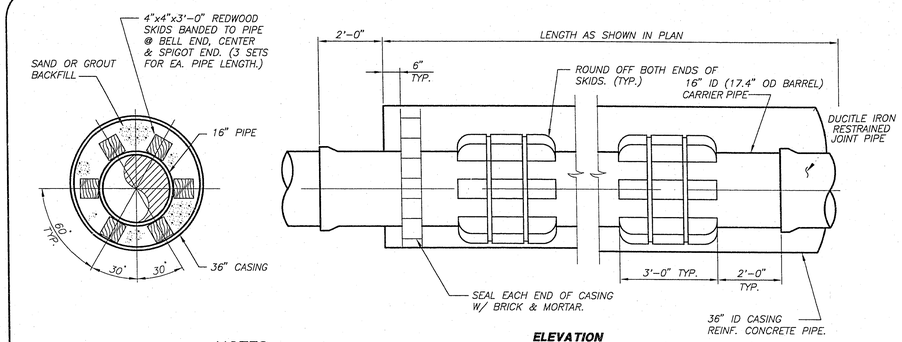

SECTION **ELEVATION**

NOTES:

1. REDWOOD OR STAINLESS STEEL CASING SPACERS (CASCADE) TO BE BANED TO PIPE AT EACH END OF PIPE JOINT. THE ANNULAR SPACE BETWEEN THE PIPE AND THE CASING SHALL BE BACKFILLED WITH SAND OR GROUT. AFTER INSTALLATION OF PIPE THE CASING SHALL BE SEALED AT BOTH ENDS WITH BRICK AND MORTAR.
2. PIPE CASING SHALL BE LAID TRUE TO LINE AND GRADE WITH NO BENDS OR CHANGES IN GRADE FOR THE FULL LENGTH OF THE CASING.
3. PIPE CASING SHALL BE CONCRETE PIPE.

   A. CONCRETE PIPE SHALL BE REINFORCED CONCRETE PIPE AS SPECIFIED IN SEC. 603 OF UNIFORM STANDARD SPECIFICATION FOR PUBLIC WORKS CONSTRUCTION. PIPE CLASS III WALL A, PER ASTM C 76 / AASHTO M 86.

PIPE CASING DETAIL

N.T.S.

10 / 3

1. 16" DIP – PJ
2. 16" COUPLING (DRESSER OR EQUAL)
3. 16" DIP – PE x FLG.
4. 16" BUTTERFLY VALVE – FLG.
5. 16x16x16 – FLG BASE TEE
6. 16" FLG. PUP WITH VICTAULIC COUPLING CLASS 53 DIP.
7. CONCRETE VAULT. 8/12
8. PIPE SUPPORTS. 2/11
9. 8"ø PIPE BRACED TO WALL (TYP.)
10. 24" HAND WHEEL OPERATOR

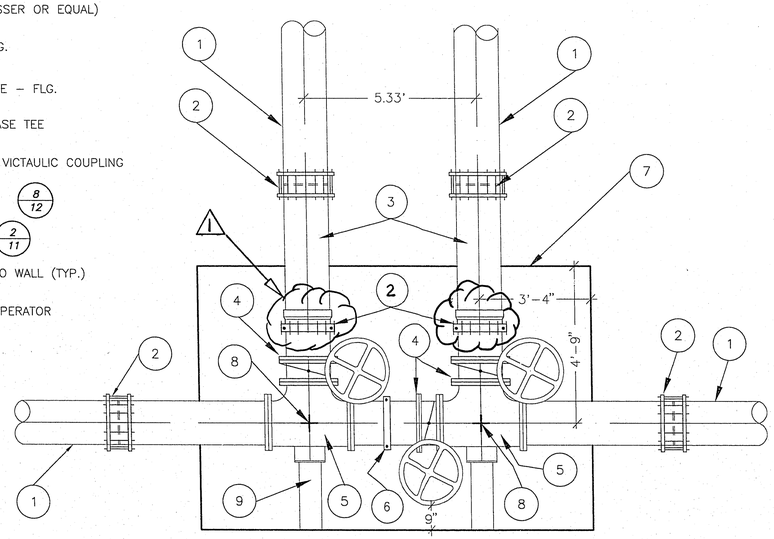

PUMP STATION INLET/OUTLET VALVE VAULT

SCALE: 1/2" = 1'-0"

10 / 4

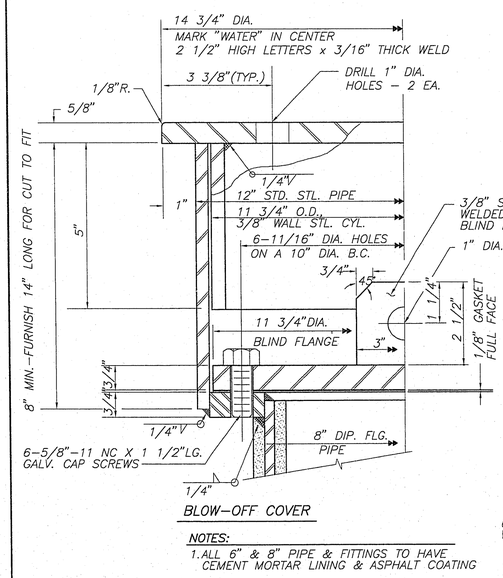

BLOW-OFF COVER

NOTES:

1. ALL 6" & 8" PIPE & FITTINGS TO HAVE CEMENT MORTAR LINING & ASPHALT COATING

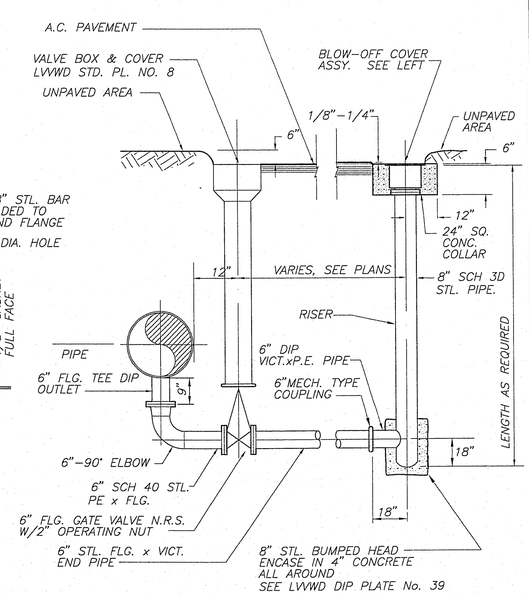

BLOW-OFF ASSEMBLY & COVER DETAIL

N.T.S.

10 / 5

REV	DATE	DESCRIPTION	C.L.V.	DATE
	5-94	COUPLING TO DRESSER	KM	5/16/94

RECOMMENDED: HOWARD K. NUDELMAN, P.E. No. 4534 — 4-12-94
APPROVED: KENNETH K. KRAMER, Civil Engineer No. 4594

G.C. WALLACE, INC.
Engineering/Architecture
1555 SOUTH RAINBOW BLVD/LAS VEGAS, NEVADA 89102

DEL WEBB COMMUNITIES, INC.
SUN CITY LAS VEGAS
PIPING DETAILS

SHEET 10 OF – SHEETS

JOB NO. 701.179 PLOTTED: 04/12/94 12:57 pm DRAWING: C:\DRAWINGS\DWL\PIPELINE\1320-100 BY: DLee

26-124

565 – 230