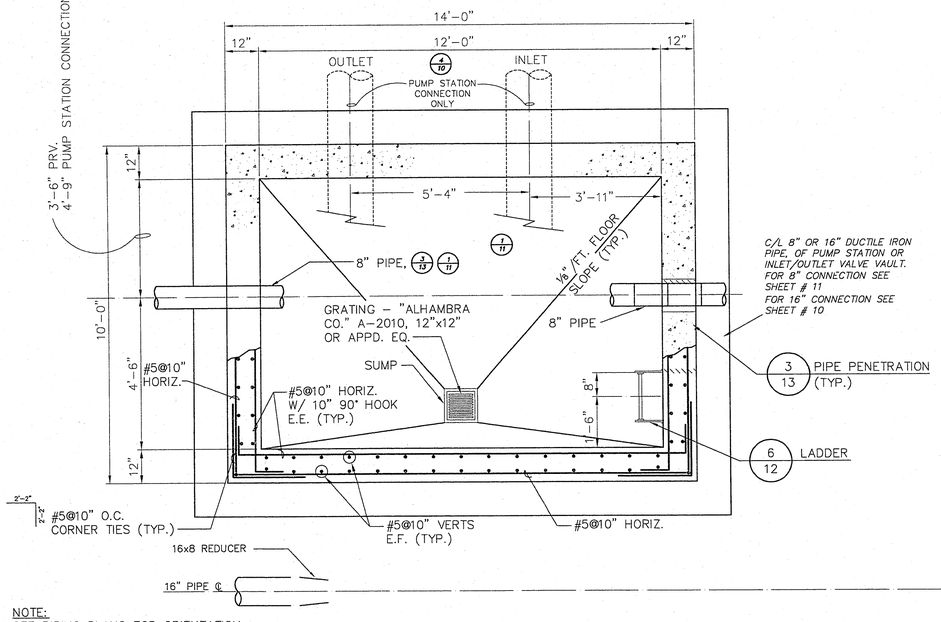

NOTE:
SEE PIPING PLANS FOR ORIENTATION.

SECTIONAL PLAN - VALVE VAULT

SCALE: ½"=1'-0"

7/12

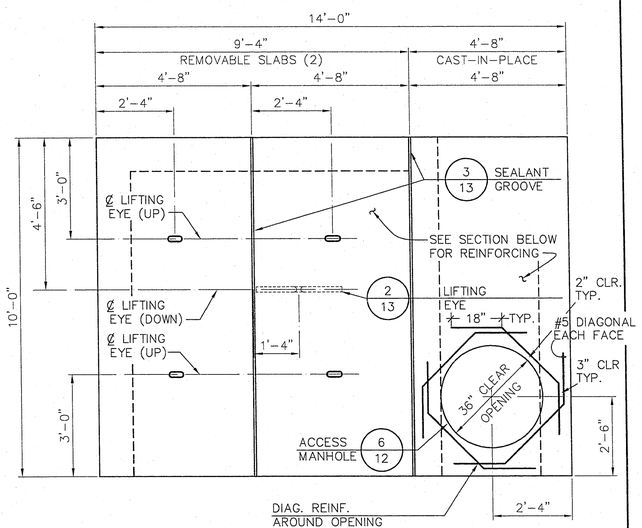

ROOF PLAN

SCALE: ½"=1'-0"

5/12

NOTE: 1. THESE DRAWINGS SHALL BE USED FOR CONSTRUCTION OF BOTH THE PUMP STATION INLET/OUTLET VAULT AND THE PRESSURE REDUCING STATION.

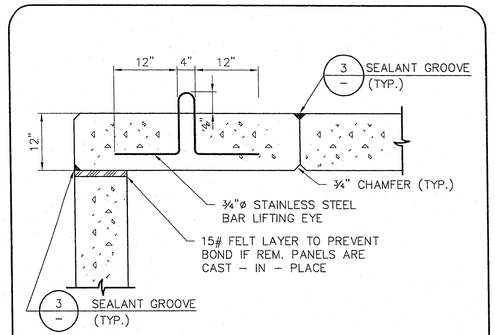

NOTE:
SEE SECTION A FOR REINFORCING STEEL.

LIFTING EYE DETAIL

NO SCALE

2/12

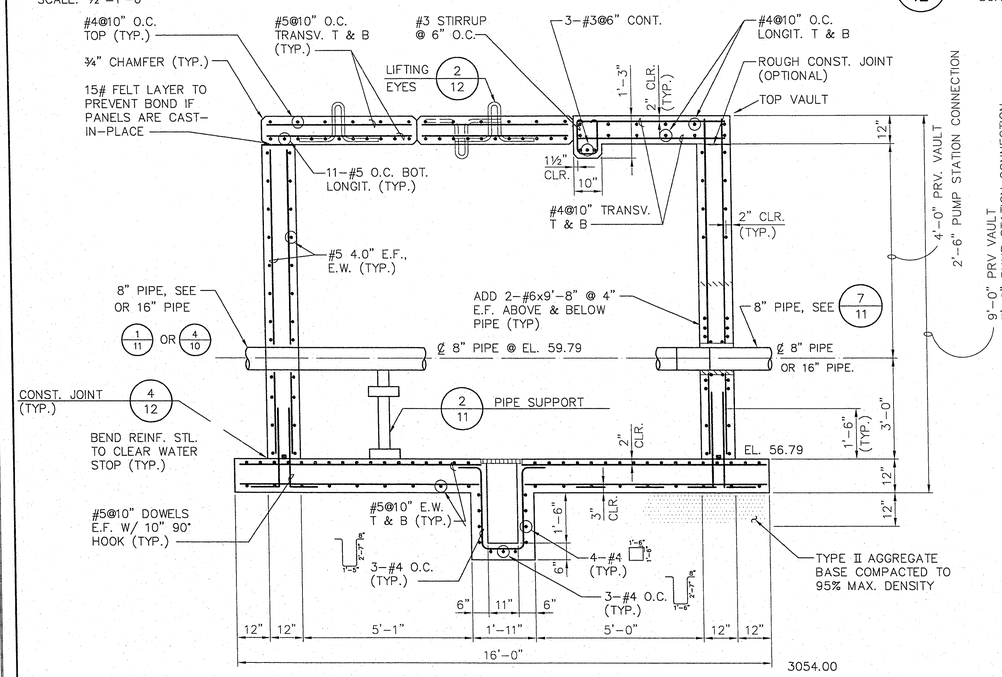

SECTION

SCALE: ½"=1'-0"

8/12

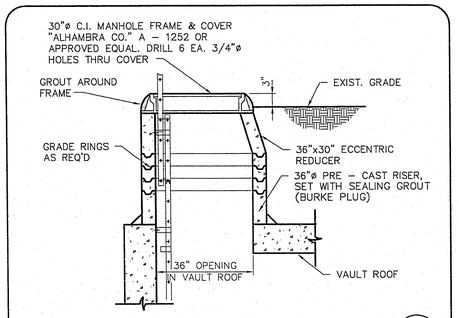

DETAIL

NO SCALE

6/12

NOTES:

1. SEE PIPING PLAN, DWG. NO. 11 FOR PIPE PENETRATIONS, ORIENTATION AND MANHOLE LOCATIONS.
2. WATERPROOFING IS REQUIRED, SEE SPECS., SECTION 03300.
3. VAULT SHALL BE DRY AND SHOWING NO SIGN OF GROUNDWATER LEAKAGE AT TIME OF ACCEPTANCE.

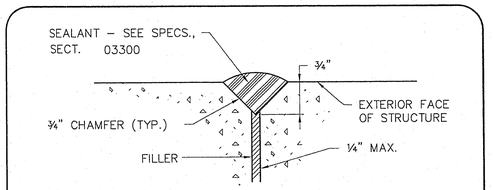

SEALANT GROOVE DETAIL

NO SCALE

3/12

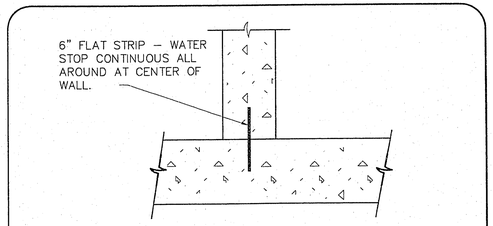

DETAIL CONSTRUCTION JOINT

NO SCALE

4/12

REV	DATE	DESCRIPTION	C.L.V.	DATE

ENGINEER'S STATE OF NEVADA
REGISTERED PROFESSIONAL ENGINEER
HOWARD K. VANGINTEER
Howard K. Vangineer
CIVIL
No. 4534
4-12-94
4534 4-12-94
P.E. NO. DATE

G.C. WALLACE, INC.
Engineering/Architecture
5555 SOUTH RAINBOW BLVD/LAS VEGAS, NEVADA 89102

DEL WEBB COMMUNITIES, INC.
SUN CITY LAS VEGAS
DETAILS

SHEET 12 OF 14 SHEETS

JOB NO. 701.179

PLOTTED: 04/12/94 1:03 pm DRAWING: C:\DRAWINGS\DW\PIPELINE\1320-12D BY: DLee

26-126

565 - 230