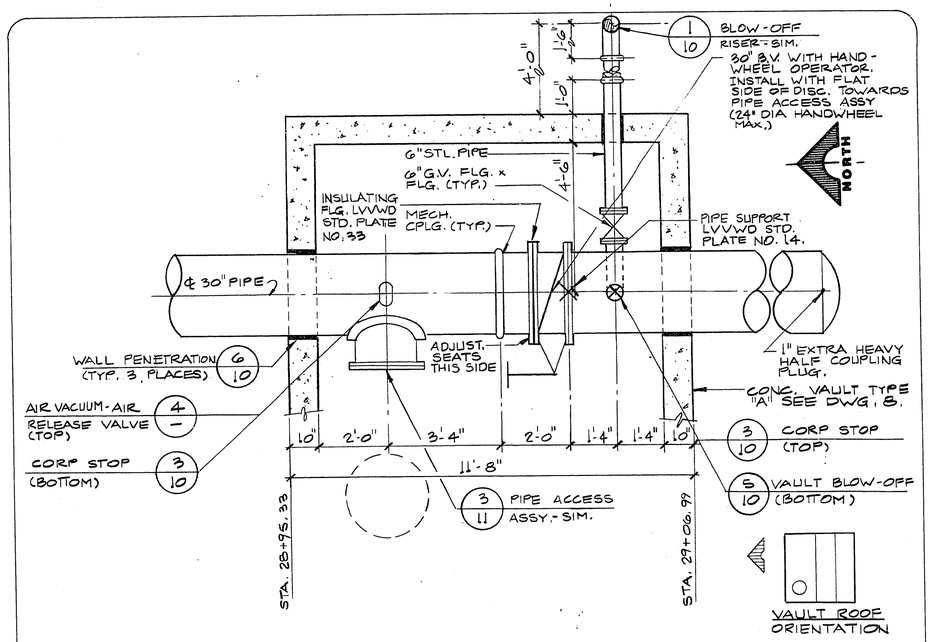

VALVE VAULT PIPING PLAN 3 (STA. 29+01.16) 3/9

SCALE: 1/2" = 1'-0"

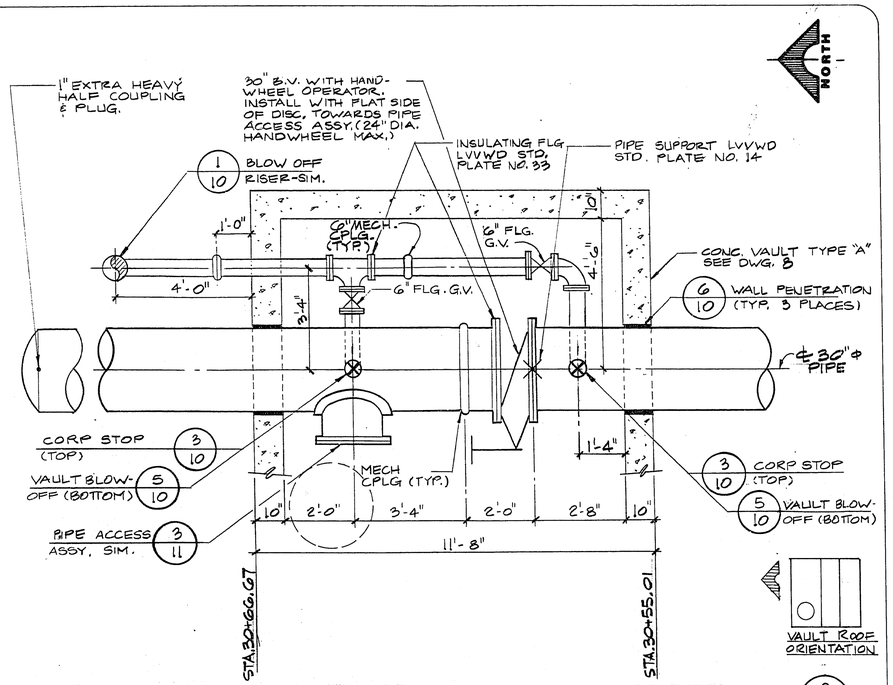

VALVE VAULT PIPING PLAN 2 (STA. 30+60.84) 2/9

SCALE: 1/2" = 1'-0"

NOTES:

1. WALL THICKNESS FOR VALVE VAULT PIPING SHALL BE AS SPECIFIED IN SECTION 2906 - STEEL PLATE SPECIALS.
2. WALL THICKNESS FOR PIPING A MINIMUM DISTANCE OF 5 FOOT OUTSIDE THE FACE OF THE VAULT WALL SHALL BE AS SPECIFIED IN SECTION 2906 - STEEL PLATE SPECIALS.

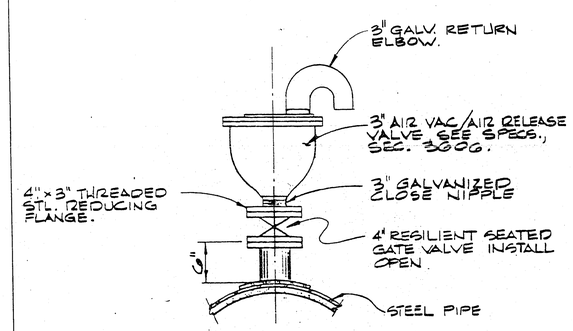

3" AIR VAC./ AIR RELEASE ASSEMBLY DETAIL

NO SCALE

4/9

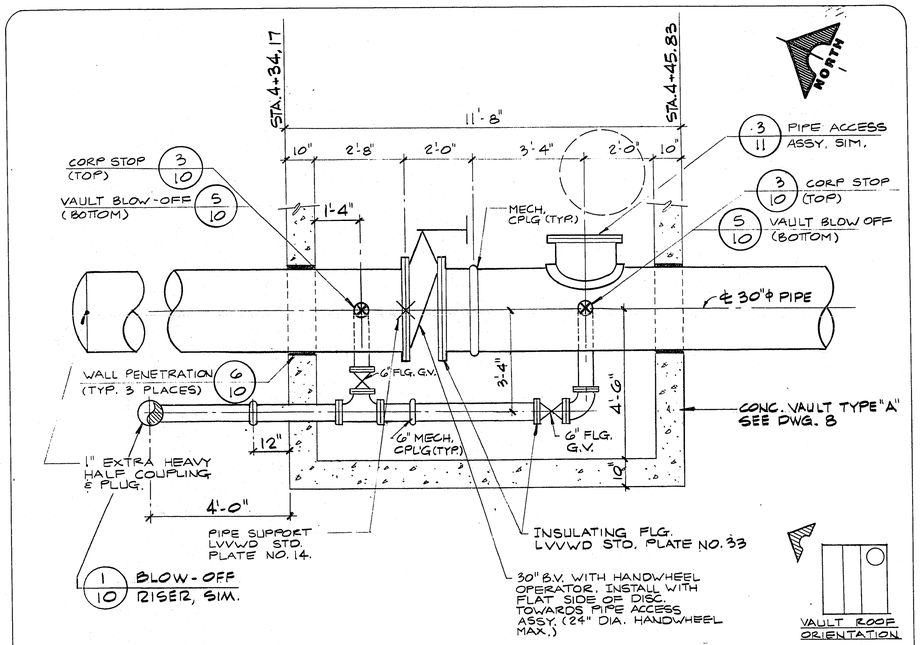

VALVE VAULT PIPING PLAN 1 (STA. 4+40.00) 1/9

SCALE: 1/2" = 1'-0"

LAS VEGAS VALLEY WATER DISTRICT
PRESSURE TEST DATE N/A
*STATE HEALTH SAMPLE DATE N/A
INSPECTOR DAVID MATHIS

JOB NO. 701.028

8/84 DIETERICH-POST 65328

CONTRACT NO. 504

565-165

REV	DATE	DESCRIPTION

RECOMMENDED: LESTER W. ANDERSON, CIVIL, STATE OF NEVADA, NO. 7977

APPR. R.E. NG. DATE 6/4/86

G.C. WALLACE, INC.
Engineering/Architecture
1555 SOUTH RAINBOW BLVD./LAS VEGAS, NEVADA 89102

DEL E. WEBB COMMUNITIES INC.
2745 ZONE PIPELINE PHASE II
VALVE VAULT PIPING PLANS

SHEET 9 OF 9 SHEETS