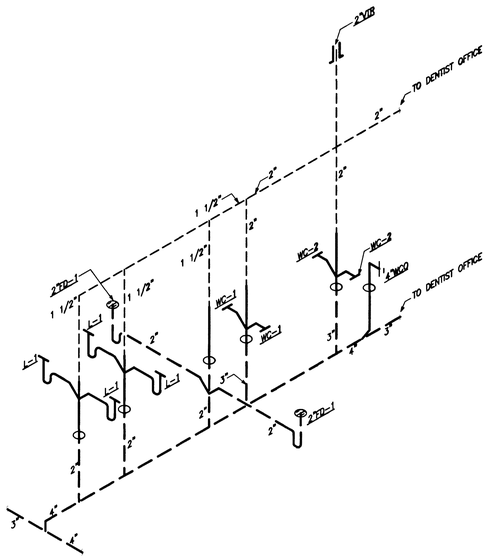

WASTE AND VENT RISER DIAGRAM

NO SCALE

WV-1
P4.03

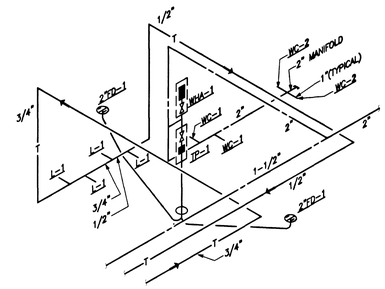

HOT AND COLD WATER SUPPLY RISER DIAGRAM

NO SCALE

WS-1
P4.03

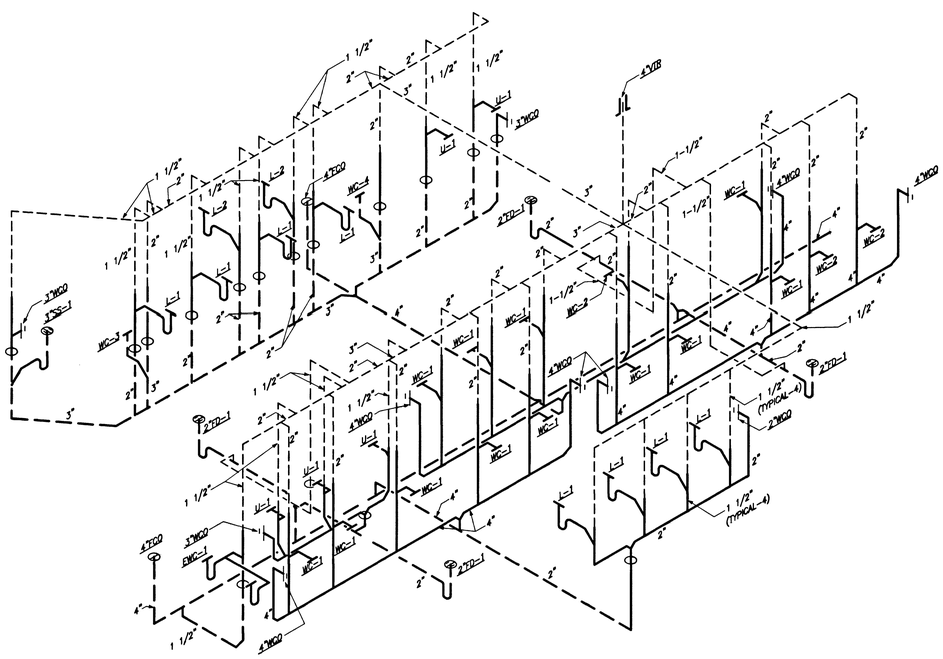

WASTE AND VENT RISER DIAGRAM

NO SCALE

WV-2
P4.03

55501

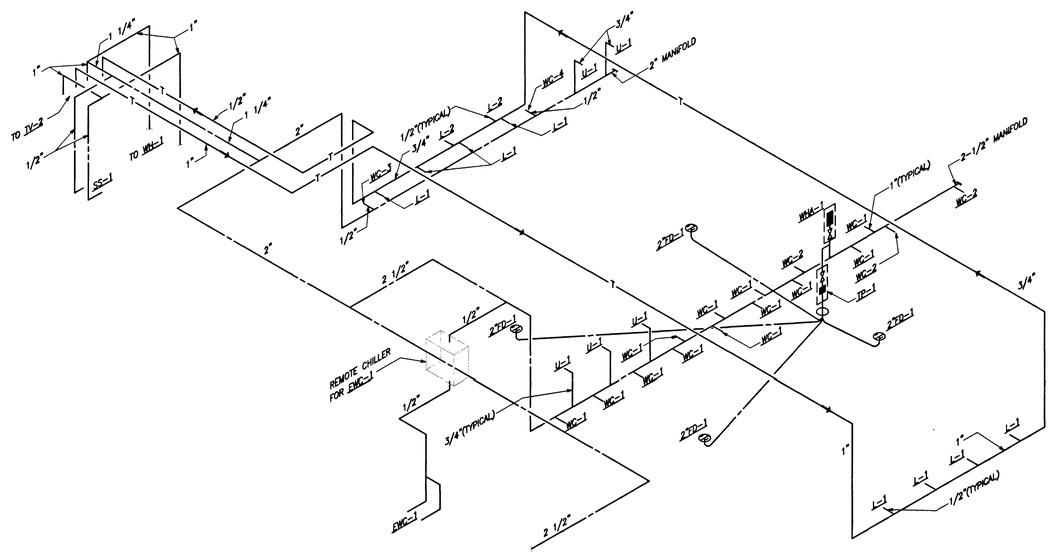

HOT AND COLD WATER SUPPLY RISER DIAGRAM

NO SCALE

WS-2
P4.03

RECORD DRAWINGS
Date: 5/21/03 This record drawing has been prepared in part, based upon information furnished by others. While this information is believed to be reliable, Harris Consulting Engineers P.C. cannot assure it's accuracy, and is not responsible for the accuracy of this record drawing or for any errors or omissions which may have been incorporated into it as a result. Those relying on this record drawing are advised to obtain independent verification of it's accuracy before applying it for any purpose.

DEPARTMENT OF PUBLIC WORKS

CITY OF LAS VEGAS NEVADA

REVISIONS

CONSULTANT

JMA ARCHITECTURE STUDIOS
1515 E. FLAMINGO ROAD, SUITE 200 LAS VEGAS, NEVADA 89119 (702) 735-4300

East Las Vegas Community Center
Eastern and Stewart

T.P. HARRIS P.C.
Fire Protection Engineers
Tel 702/248-1115 Fax 702/248-1124

PROJECT NO: 20208.00
REVISED BY: A. DeBLIES
CHECKED BY: B.S. HARRIS
DRAWN BY: A. DeBLIES

STAMP

OWNER: CITY OF LAS VEGAS
DEPARTMENT OF PUBLIC WORKS
ARCHITECTURAL SERVICES

400 EAST STEWART AVENUE
LAS VEGAS, NEVADA 89101
PHONE: (702) 229-6535
FAX: (702) 382-3232
TDD: (702) 386-9108

DRAWN	A.D.
FILE	
DATE	August 2, 2001
SCALE	NO SCALE
BID NO	01.15301.22
CLV DWG NO	521-268
SHT NO	P4.03

DRAWINGS AS INSTRUMENTS OF SERVICE ARE THE PROPERTY OF THE DESIGN PROFESSIONAL WHOSE STAMP OF CERTIFICATION APPEARS ON THE DRAWINGS AND SPECIFICATIONS RETAINED BY THE CLIENT MAY BE UTILIZED ONLY FOR OCCUPYING THE PROJECT FOR WHICH THEY WERE PREPARED AND NOT FOR THE CONSTRUCTION OF ANY OTHER PROJECT. A.A.C. 03.3.780 DRAWINGS AND SPECIFICATIONS RETAINED BY THE CLIENT MAY BE UTILIZED ONLY FOR OCCUPYING THE PROJECT FOR WHICH THEY WERE PREPARED AND NOT FOR THE CONSTRUCTION OF ANY OTHER PROJECT IN WHOLE OR IN PART WITHOUT WRITTEN CONSENT IS STRICTLY PROHIBITED COPIES OF THE DRAWINGS AND SPECIFICATIONS