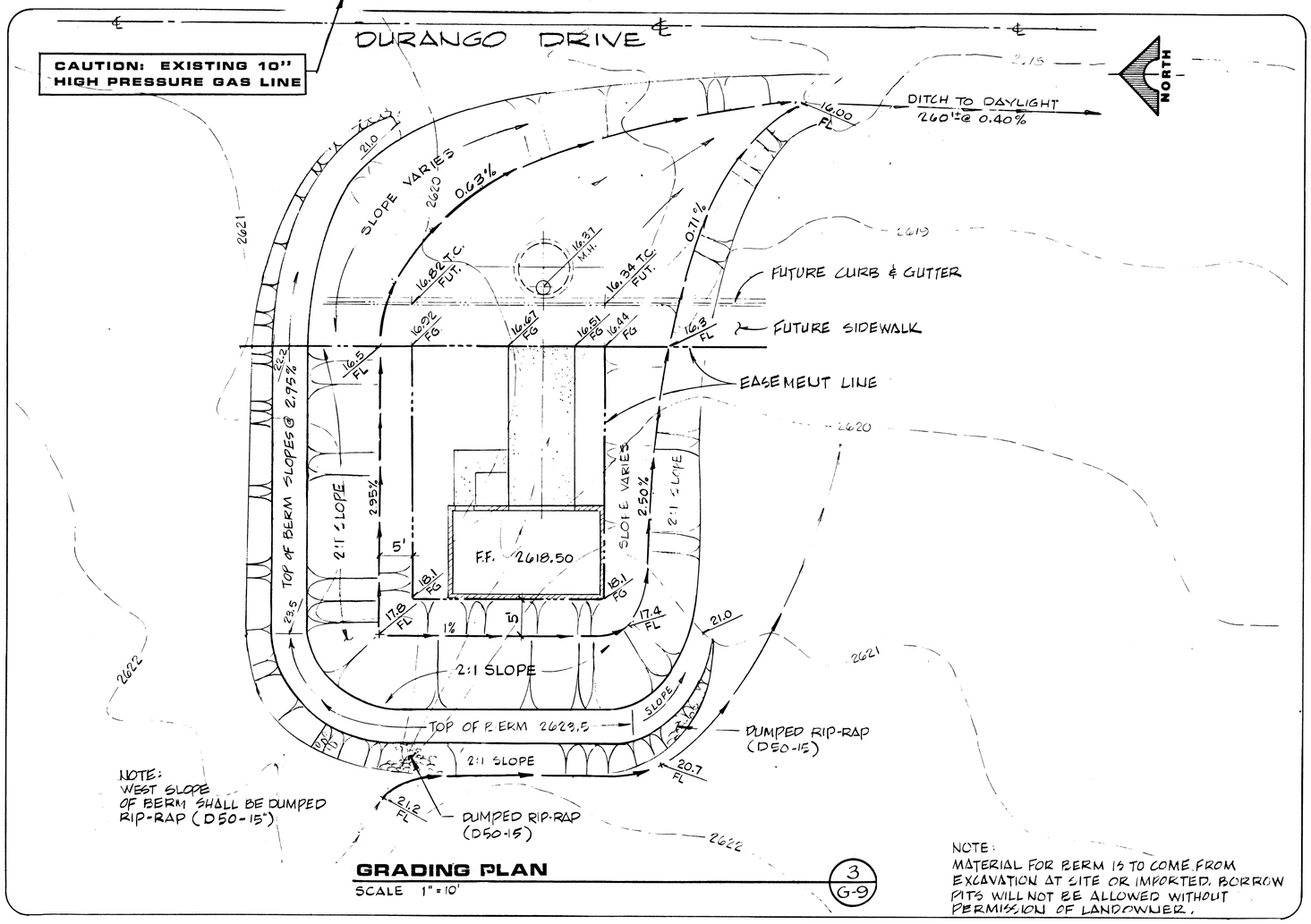

GRADING PLAN (3 / G-9)

SCALE 1" = 10'

NOTE:
MATERIAL FOR BERM IS TO COME FROM EXCAVATION AT SITE OR IMPORTED. BORROW PITS WILL NOT BE ALLOWED WITHOUT PERMISSION OF LANDOWNER.

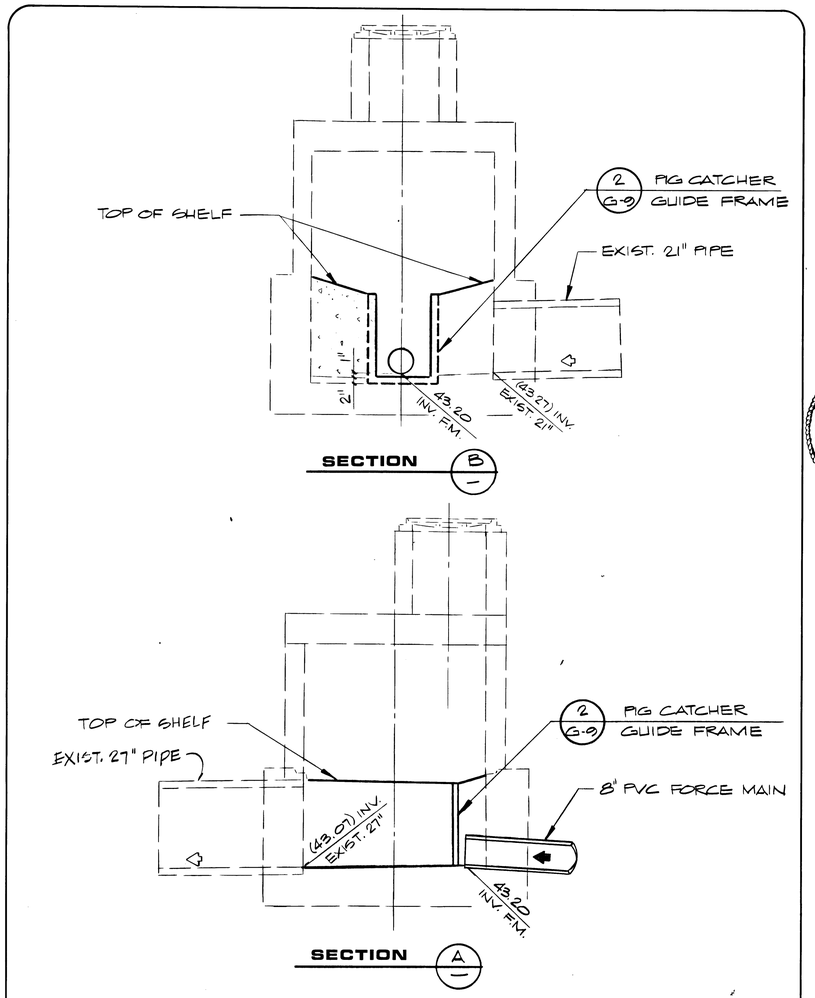

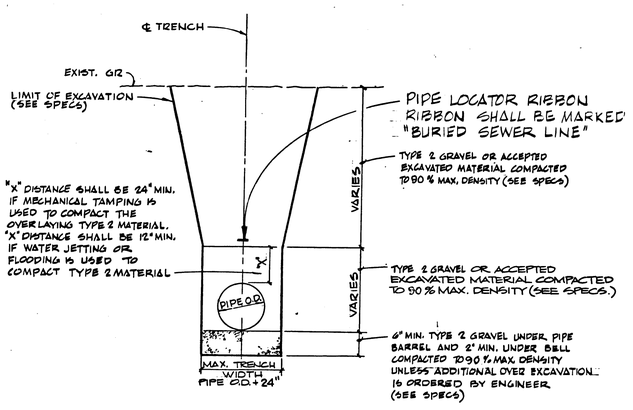

TYPICAL TRENCH SECTION (D / G-9)

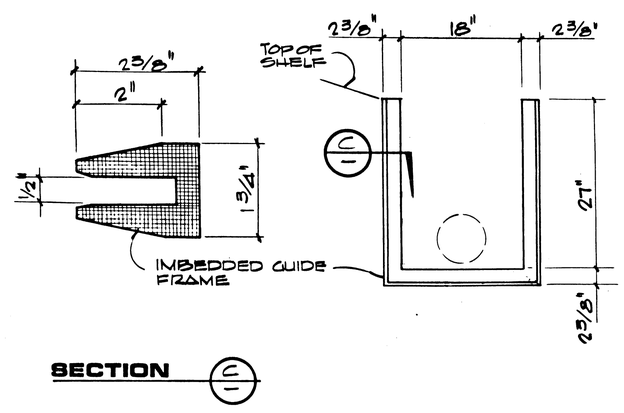

PIG CATCHER FRAME GUIDE DETAIL (2 / G-9)

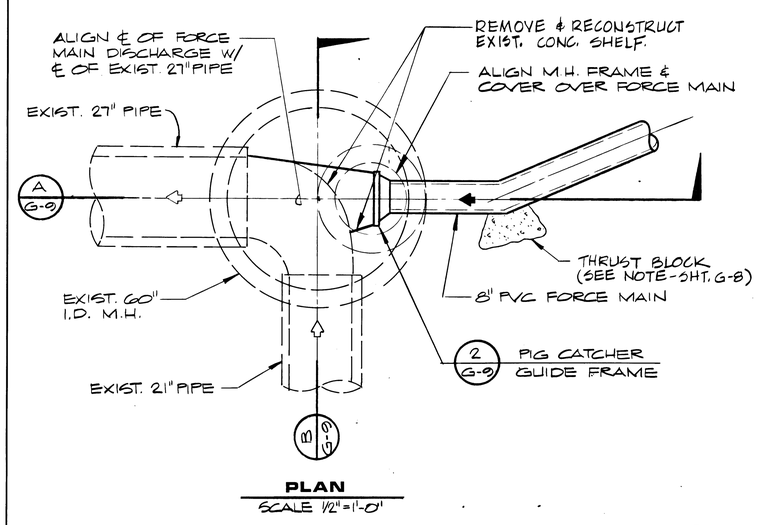

MANHOLE MODIFICATION DETAIL (1 / G-9)

SCALE 1/2" = 1'-0"

REV	DATE	DESCRIPTION
		AS BUILT NO REVISIONS

R.E. NO. DATE

RECORD DRAWING AMENDED BY ENGINEER

REGISTERED PROFESSIONAL ENGINEER — STATE OF NEVADA — CIVIL — No. 6218

G. C. WALLACE
Consulting Engineers, Inc.
1555 South Rainbow Blvd. • Las Vegas, Nevada 89102 • 363-1200

CITY OF LAS VEGAS
DURANGO DRIVE LIFT STATION
FORCE MAIN DETAILS & TRENCH SECTION

SHEET **G-9** OF 15 SHEETS

AS BUILT DRAWING

JOB NO. 412.150

8/84 DIETERICH-POST 6532B

22-1-11 307-V578