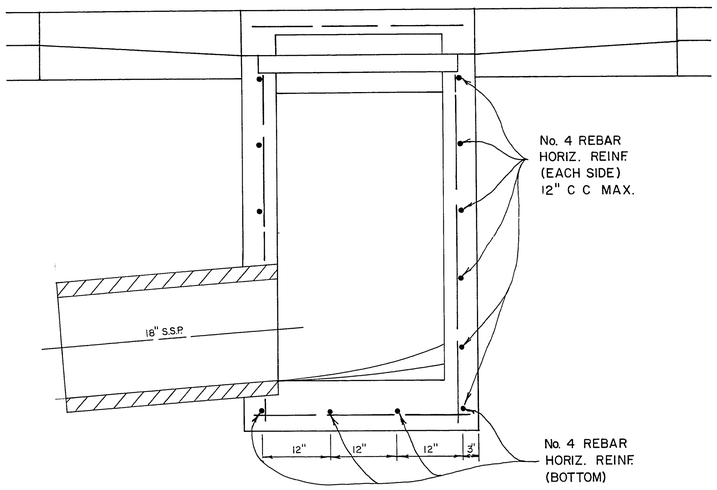

SECTION Y-Y
NO SCALE

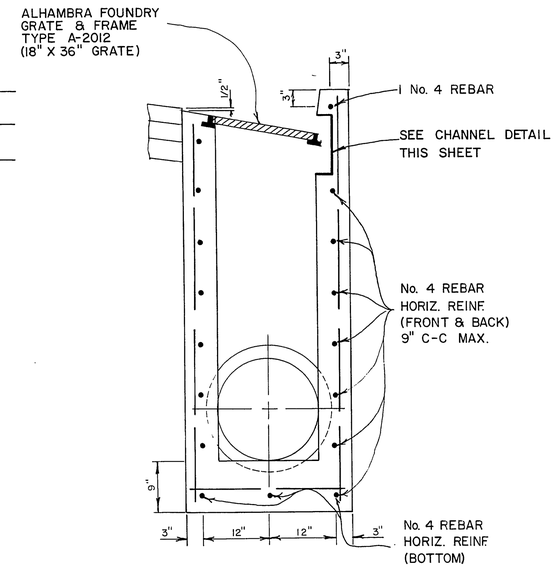

SECTION X-X
NO SCALE

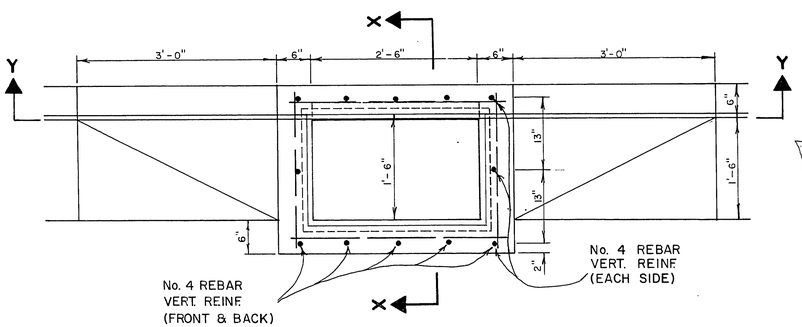

PLAN VIEW
NO SCALE

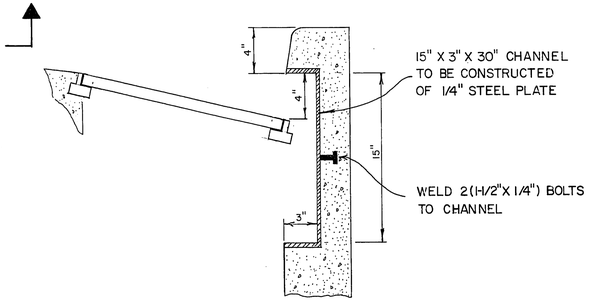

CHANNEL DETAIL
NO SCALE

TYPE A DROP INLET DETAIL

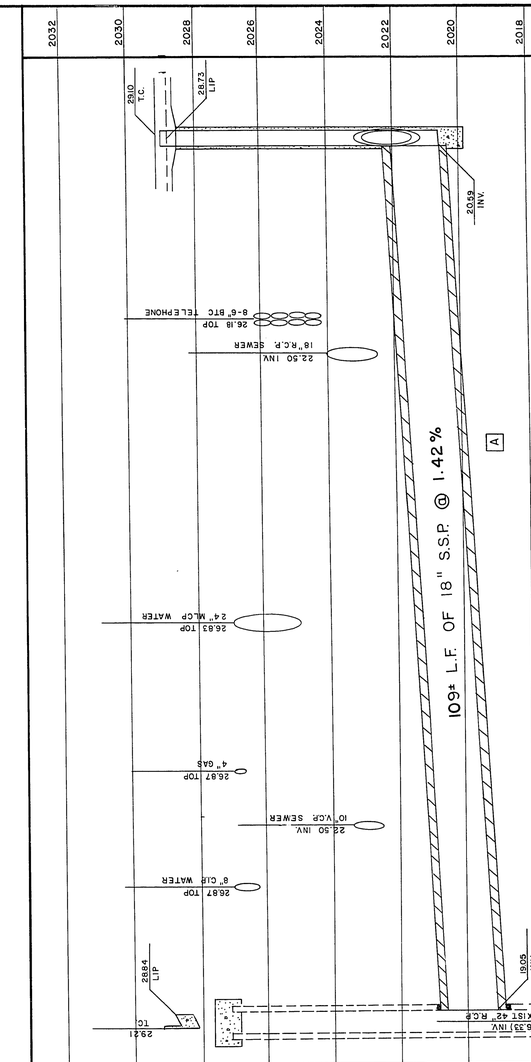

DROP INLET NO. 1A
TYPE II
STA. 1+23.42 (CASINO CENTER)
32.9' RT.

JUNCTION BOX NO. 2
TYPE II (MODIFIED)
STA. 3+33
33.75' LT.

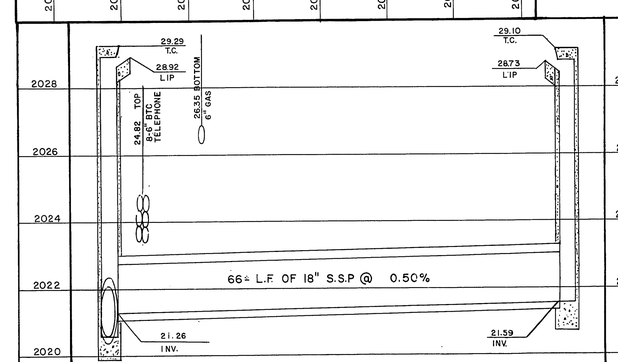

DROP INLET NO. 1A
TYPE II
STA. 1+23.42 (CASINO CENTER)
32.9' LT.

CASINO CENTER BLVD.

DROP INLET NO. 1B
TYPE II
STA. 1+33.91 (CASINO CENTER)
32.4' RT.

APPROVED BY THE DIRECTOR OF PUBLIC SERVICES	DATE 4/22/99
APPROVED BY THE SUPERVISOR OF ENGINEERING DESIGN	DATE 4/12/99

CHARLESTON & CASINO CENTER

Scale (h) 1" = 10'	Scale (v) 1" = 2'	W.O. no. 7719	
Fld. bk. no. 70-5X	Date		
Design by C. KREHNOVI		Drawn by P. WHITE	
Approved by the Director of Public Services		Date	

B CHANGED LATERAL

Revisions	Date

Department of Public Services — Engineering Design Division

TYPE A DROP INLET DETAIL & LATERAL DETAILS "DRAWING CHANGE"

EAST CHARLESTON BLVD.
MAIN ST. TO 10th ST.
PHASE I

CITY OF LAS VEGAS — WILLIAM J. MOLASKY — CITY ENGINEER

Drawing no. 107V-829A | 20A / 38

17-4-102