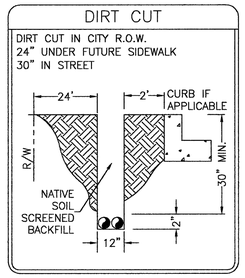

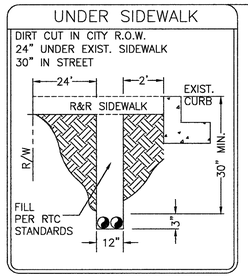

CONSTRUCTION NOTES:

1. LOCATE ALL UNDERGROUND UTILITIES BEFORE DIGGING. 1-800-227-2600
2. INSTALL PULL BOXES AT EXISTING FINISH GRADE.
3. MAINTAIN 18" MINIMUM COVER OVER DUCT IN DIRT BEHIND SIDEWALK. MAINTAIN 24" MINIMUM COVER OVER DUCT UNDER PROPOSED SIDEWALK. MAINTAIN 36" MINIMUM COVER OVER DUCT UNDER STREET.
4. COMPACT BACKFILL IN THE STREET TO 95% AND COMPLY TO ALL. CITY OF LAS VEGAS, COUNTY STANDARDS.
5. PULL BOX – 15-3/4" x 25-1/4" x 12" OR 22-1/4" x 35-1/4" x 12"
6. CONDUIT – PVC SCHEDULE 40
7. REMOVE ONE SECTION OF SIDEWALK WHERE REQUIRED.
8. PLACE TV PEDESTAL AT LOCATION SHOWN, TV-2400, CPH-1230, 1730 OR 2000 AS NOTED.
9. REPLACE SIDEWALK AT EXISTING FINISH GRADE WHERE REQUIRED.
10. BORE UNDER ALL CROSS GUTTERS.
11. ALL LONGITUDINAL CUTS SHALL BE AT LIP OF GUTTER UNLESS OTHERWISE NOTED.

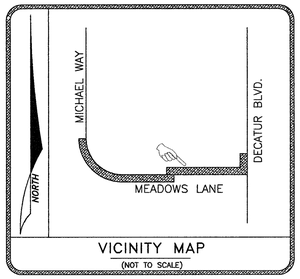

LEGEND:

- R&R SLAB OR POTHOLE
- EXISTING PULL BOX
- PROPOSED PULL BOX
- EXISTING PEDESTAL
- PROPOSED PEDESTAL
- —C—C— PROPOSED CONDUIT TRENCH
- —X—X— EXISTING CONDUIT
- —B—B— PROPOSED BORE
- RIGHT-OF-WAY OR PROPERTY LINE
- BACK OF CURB OR CURB FACE
- INTERSECTING CENTERLINE

*OTHER ITEMS WILL BE CALLED OUT

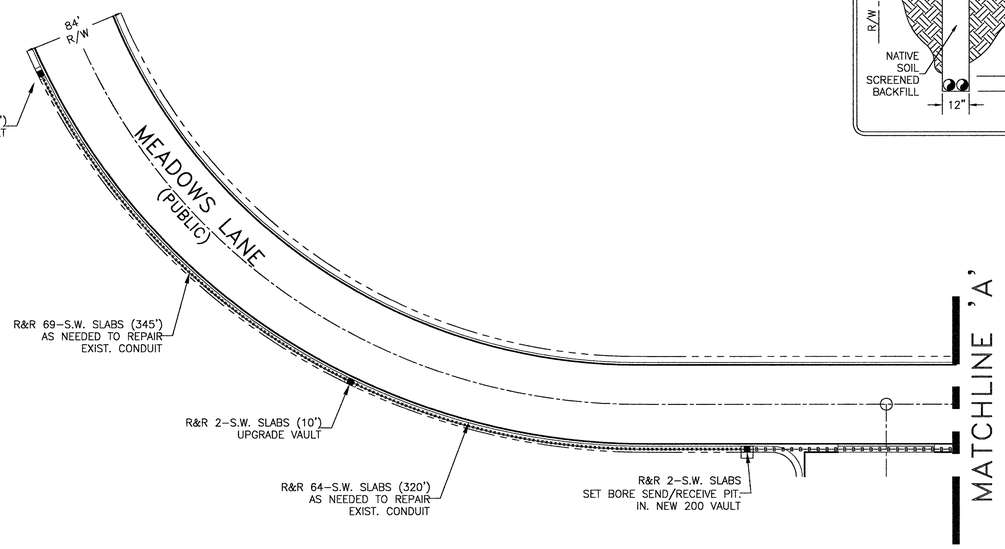

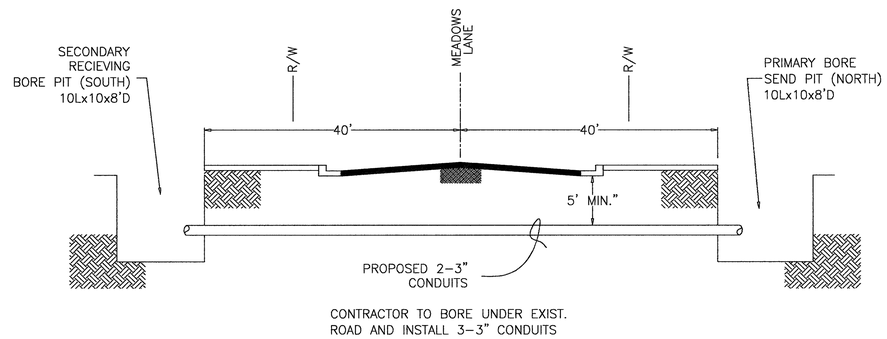

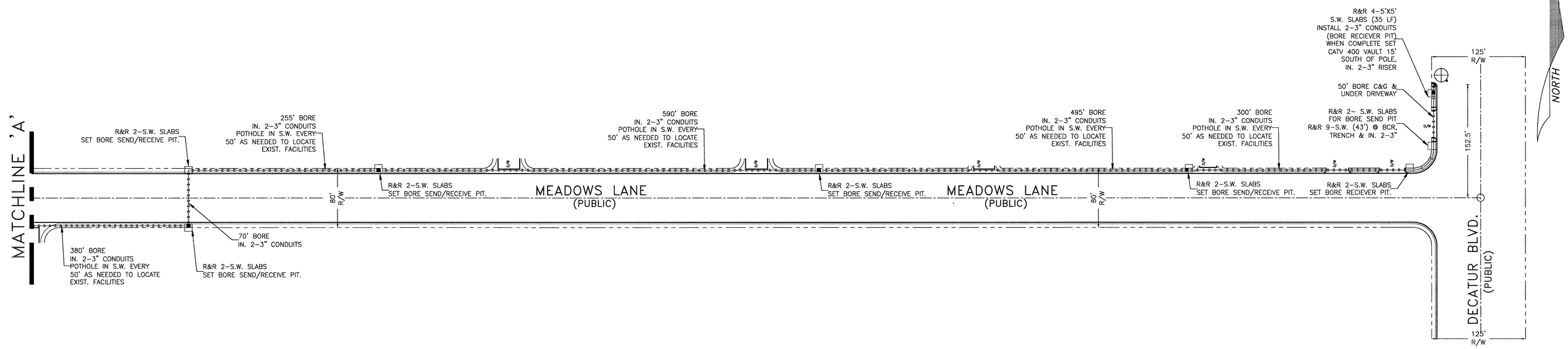

NOTE

EXISTING UTILITY LOCATIONS SHOWN HEREIN ARE APPROXIMATE ONLY. IT SHALL BE THE CONTRACTOR'S RESPONSIBILITY TO DETERMINE THE EXACT VERTICAL AND HORIZONTAL LOCATION OF ALL EXISTING UNDERGROUND UTILITIES PRIOR TO COMMENCING CONSTRUCTION. NO REPRESENTATION IS MADE THAT ALL EXISTING UTILITIES ARE SHOWN HEREON. THE ENGINEER ASSUMES NO RESPONSIBILITY FOR UTILITIES NOT SHOWN OR UTILITIES NOT SHOWN IN THEIR PROPER LOCATION.

96805

Approved for Construction

THIS APPROVAL IS FOR WORK IN CITY OF LAS VEGAS RIGHT OF WAY OR CITY OF LAS VEGAS EASEMENTS ONLY. OBTAINING PERMISSION, EASEMENTS, OR RIGHTS OF ENTRY FOR WORK ON PRIVATE PROPERTY IS THE RESPONSIBILITY OF THE UTILITY.

CLV DESIGNEE APPROVAL — DATE 10/11/06

Avoid cutting underground utility lines. It's costly. Call before you Dig. 1-800-227-2600 UNDERGROUND SERVICE ALERT (USA)

DRAFTING CONTACT: Jeremiah Bowles
PHONE: (702) 545-1673

TOTAL BORE	1798'
TOTAL DIRT TRENCH	665'
TOTAL ASPHALT TRENCH	0'
TOTAL TRENCH	2463'
SIDEWALK REMOVAL/REPAIR	
TOTAL S/W PANELS	166'
TOTAL LINEAR FOOTAGE	830'

CONTRACTOR: COM TEC

PROJECT LOCATION/DESCRIPTION: DECATUR BLVD./MEADOWS LN.
AREA: CITY OF LAS VEGAS
COX COMMUNICATIONS
SCALE: 1"=60'
DATE 9/23/06 BY
TECH. RANDY
F.B. 35-35-5M
APPROVED BY: RANDY HUMPHREY
MEADOWS LN./DECATUR BLVD.
NODE #
MAP # 5643/5644
PERMIT # 4040
DATE: BY: REVISIONS

107V9718-COX

1 OF 1

CLV DRAWING # #40510060000C

CLV PERMIT #