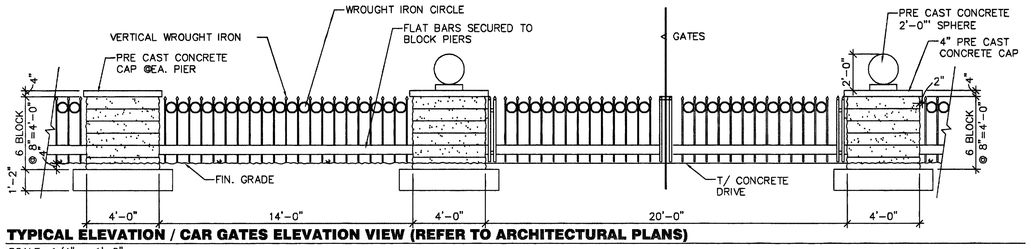

TYPICAL ELEVATION / CAR GATES ELEVATION VIEW (REFER TO ARCHITECTURAL PLANS)

SCALE: 1/4" = 1'-0"

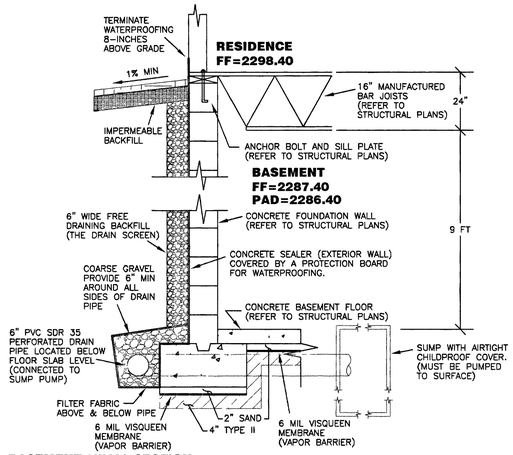

BASEMENT / WALL SECTION

NOT TO SCALE

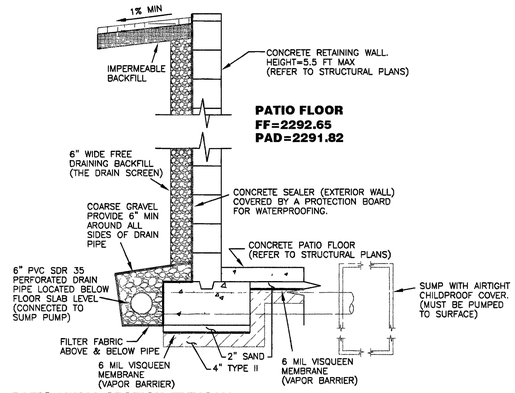

(E) PATIO / WALL SECTION (TYPICAL)

NOT TO SCALE

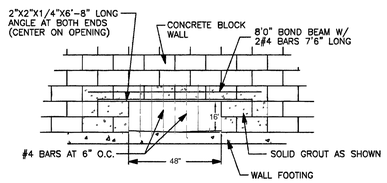

BLOCK WALL OPENING (48" X 16" OPENING)

NOT TO SCALE

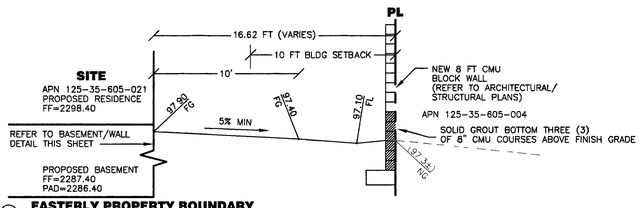

(A) EASTERLY PROPERTY BOUNDARY

NOT TO SCALE

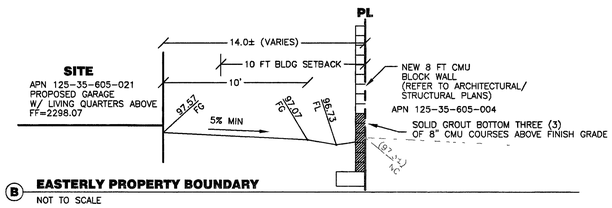

(B) EASTERLY PROPERTY BOUNDARY

NOT TO SCALE

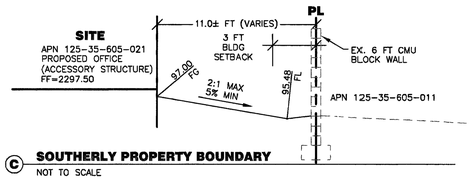

(C) SOUTHERLY PROPERTY BOUNDARY

NOT TO SCALE

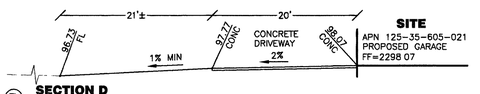

(D) SECTION D

NOT TO SCALE

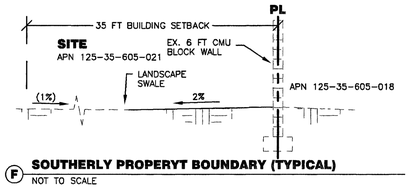

(F) SOUTHERLY PROPERYT BOUNDARY (TYPICAL)

NOT TO SCALE

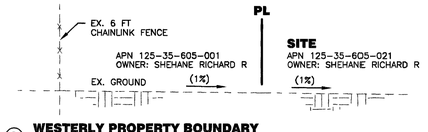

(G) WESTERLY PROPERTY BOUNDARY

NOT TO SCALE

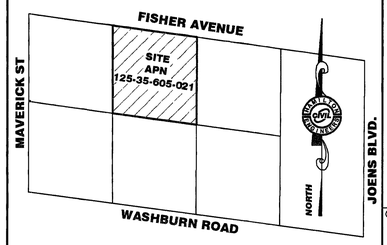

VICINITY MAP (NTS)

SE4, NE4, SEC. 35, T19S, R60E, M.D.M.

BENCHMARK

CITY OF LAS VEGAS BENCHMARK 8LV90 35E6 -- RIVET AND ROUND ALUMINUM PLATE IN THE TOP OF CURB, SOUTHWEST CORNER OF WASHBURN RD. AND MAVERICK ST. NEAR THE PT OF MAVERICK ST.
NAVD 88 ELEV.=700.768(M)=2299.10(FT)

BASIS OF BEARING

NORTH 82°02'26" WEST BEING THE CENTER LINE OF FISHER AVENUE WHICH LIES WITHIN THE SOUTHEAST (SE 1/4) OF THE SOUTHEAST QUARTER (SE 1/4) OF THE NORTHEAST QUARTER (NE 1/4) OF SECTION 35, TOWNSHIP 19 SOUTH, RANGE 60 EAST, M.D.M., CLARK COUNTY, NEVADA AS SHOWN ON FILE 94 PAGE 84 OF RECORD OF SURVEYS, OFFICIAL RECORDS, CLARK COUNTY, NEVADA.

FLOOD ZONE

FIRM PANEL NO. 32003C1765 E, ZONE "X", EFFECTIVE SEPTEMBER 27, 2002

LEGAL DESCRIPTION

THAT PORTION OF THE SOUTHEAST QUARTER (SE 1/4) OF THE NORTHEAST QUARTER (NE 1/4) OF SECTION 35, TOWNSHIP 19 SOUTH, RANGE 60 EAST, M.D.B.&M., CITY OF LAS VEGAS, CLARK COUNTY, NEVADA, DESCRIBED AS LOTS ONE(1) AND TWO(2), AS SHOWN BY MAP THEREOF ON FILE IN FILE 23 OF PARCEL MAPS, PAGE 100, IN THE OFFICE OF THE COUNTY RECORDER OF CLARK COUNTY, NEVADA.
APN 125-35-605-021

GEOTECHNICAL / GRADING NOTES

SOILS REPORT PREPARED BY:
J.A.CESARE & ASSOCIATES, INC.
671 PROFESSIONAL AVENUE, SUITE 504
HENDERSON, NEVADA 89015-6613
PH: (702) 564-3331, FAX: (702) 564-8542
SOILS REPORT JOB NO. 05.1022

1. ALL GRADING AND PAVING TO BE COMPLETED IN STRICT ACCORDANCE WITH THE ABOVE REFERENCED SOILS REPORT.

2. PAD ELEVATION IS BASED ON FOUR (4") INCHES TYPE II OVERLAIN WITH A 6 MIL VISQUEEN MEMBRANE COVERED WITH TWO (2") INCHES OF SAND ALL UNDER FOUR (4) INCHES CONCRETE. SEE SOILS REPORT FOR ALTERNATIVE

3. ALL CUT AND FILL SHALL COMPLY WITH SUBMITTED SOILS REPORT.

LEGEND

EOP	EDGE OF PAVEMENT
CL	CENTERLINE
PL	PROPERTY LINE
R/W	PUBLIC ROAD RIGHT OF WAY
	EXISTING CURB & GUTTER, SIDEWALK
BSL	BUILDING SETBACK LINE
X X X	EX. CHAIN LINK FENCE
	EX. WALL
	PROPOSED WALL
	ASPHALT SAWCUT LINE
(XX.X) TRC	EXISTING GRADE
XX.XX TBC	PROPOSED GRADE
NEW AC	TRENCH AND BACKFILL (UNPAVED AREAS)
	EXISTING CONTOUR LINES
1800	FINISH CONTOUR LINES

AC	ASPHALTIC CONCRETE
APN	ASSESSOR PARCEL NUMBER
BC	BRASS CAP
BFE	BASE FLOOD ELEVATION
BOB	BASIS OF BEARING
CATV	CABLE / TELEVISION
CB	CABLE BOX
CONC	CONCRETE
DACSWCS	DESIGN AND CONSTRUCTION STANDARDS FOR WASTEWATER COLLECTIONS SYSTEMS
DW	DRIVEWAY
EB	ELECTRIC BOX
EG	EDGE OF GRAVEL
ELEC	ELECTRIC
EM	ELECTRIC METER
EP	EDGE OF PAVEMENT
ER	EDGE OF ROAD
EX	EXISTING
FF	FINISHED FLOOR
FG	FINISHED GRADE
FL	FLOW LINE
FNCE	FENCE
FO	FIBER OPTIC
FS	FINISHED SURFACE
GB	GRADE BREAK
GW	GUY WIRE
HP	HIGH POINT
HYD/FH	FIRE HYDRANT
ICV	IRRIGATION CONTROL VALVE
INV	INVERT
LF	LINEAR FEET
LP	LIGHT POLE
MAX	MAXIMUM
MIN	MINIMUM
NG	NATURAL GROUND
POC	POINT OF CONNECTION
NPC	NEVADA POWER CO. METER
PP	POWER POLE
PROTNK	PROPANE TANK
PVC	POLYVINYL CHLORIDE
RAC	REBAR AND ALUMINUM CAP
RET	RETAINING
RPC	REBAR AND PLASTIC CAP
SL	STREET LIGHT
SNWA	SOUTHERN NEVADA WATER AUTHORITY
SP	SERVICE POLE
SSCO	SANITARY SEWER CLEANOUT
SSMH	SANITARY SEWER MANHOLE
STA	STATION
SVRZ	SIGHT VISIBILITY RESTRICTION ZONE (SVRZ): NOTHING OVER 24 INCHES IN HEIGHT AS MEASURED FROM TOP OF CURB ALLOWED IN SVRZ EXCEPT TRAFFIC CONTROL DEVICES.
SWR	SEWER
TB	TELE-BOX
TBC/TC	TOP BACK OF CURB
TBSW	TOP BACK OF SIDE WALK
TELE	TELEPHONE
TF	TRANSFORMER
TMH	TOP OF MANHOLE
TOE	TOE OF SLOPE
TOP	TOP OF SLOPE
TR	TELE-RISER
TW	TOP OF WALL
TV	TELE-VAULT
UDACS	UNIFORM DESIGN AND CONSTRUCTION STANDARDS FOR POTABLE WATER SYSTEMS
UGE	UNDERGROUND ELECTRIC
USDCCA	UNIFORM STANDARD DRAWINGS (CLARK COUNTY AREA)
VG	VALLEY GUTTER
WC	WELL CASING
WT	WATER TANK
WTR	WATER
WM	WATER METER
WV	WATER VALVE

REV	DATE	BY	DESCRIPTION

CLIENT CONTACT:
DR. RICHARD SHEHANE
6225 FISHER AVENUE
LAS VEGAS, NV 89130
PH: (702) 375-1665
FAX: (702) 263-5190

HAMILTON CIVIL ENGINEERS
Ph: (702) 590-3658
Fax: (702) 247-4507
3945 Pebble Creek Avenue
Las Vegas, Nevada 89147
John@HamiltonCivilEngineers.com

Detail Sheet

NAME OF PROJECT: Dr. Richard Shehane - Single Family Residence (APN 125-35-605-021)

GOVERNING ENTITY: CITY OF LAS VEGAS, NEVADA

ASSESSOR PARCEL NUMBER: 125-35-605-021

N/A

HAMILTON CIVIL ENGINEERS: HCE 05-500-004

ENGINEER'S SEAL

JOHN C. HAMILTON, Exp: 06/30/2007, CIVIL, No. 015132, REGISTERED PROFESSIONAL ENGINEER, STATE OF NEVADA

12/06

SHEET ID

C5

5 OF 5 SHEETS

GOVERNING ENTITY REF NO.: 10704570

88561