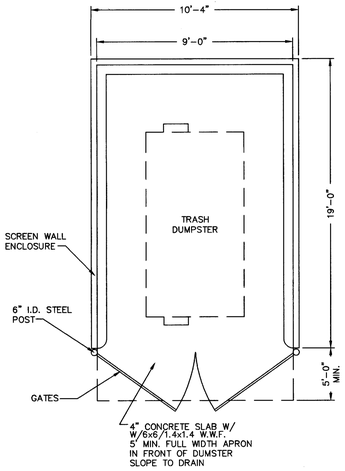

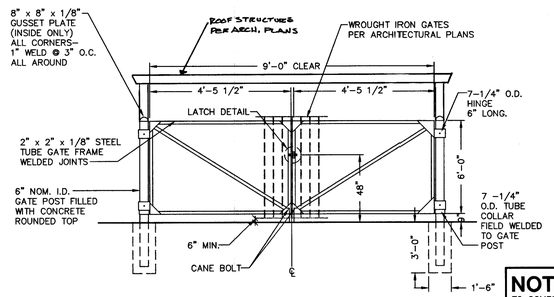

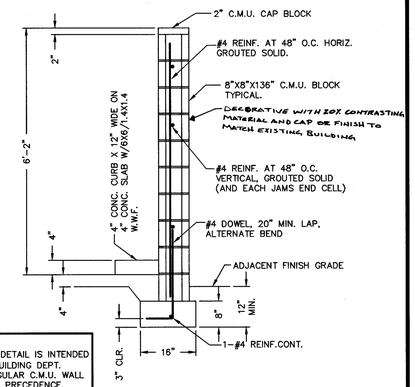

NOTE: THIS DETAIL IS INTENDED TO COMPLY WITH BUILDING DEPT. STANDARD FOR REGULAR C.M.U. WALL DETAIL WHICH TAKE PRECEDENCE.

TRASH ENCLOSURE SECTIONS AND DETAILS

NOT TO SCALE

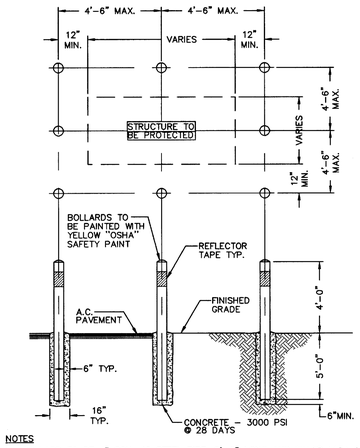

NOTES

1. BOLLARD TO BE 4" SCH. 40 STEEL PIPE, 9'-0" LONG AND FILLED WITH CONCRETE.
2. BOLLARDS ON SIDE NOT ACCESSIBLE TO VEHICLES MAY BE OMITTED BY ENGINEER.
3. PLACE 6" WIDE, YELLOW CLASS 4 REFLECTIVE TAPE (PER STANDARD SPECIFICATIONS, SECTION 716), 4" DOWN FROM TOP, FOR FULL DIAMETER ON ALL BOLLARDS.
4. CONTRACTOR TO ASSURE THAT BOLLARDS ARE PLACED TO ALLOW FULL ACCESS TO THE PROTECTED FACILITY.

VEHICULAR PROTECTION BOLLARD

NOT TO SCALE

REV	DATE	BY	REVISION

Cyril Ovuworie, M.D., Prof. Corp.
2110 E. Flamingo Road, Suite 200
Las Vegas, NV 89119

Carter :: Burgess
6655 Bermuda Road
Las Vegas, NV 89119
Consultants in Planning, Engineering, Construction Management, and Related Services (702) 938-5400 Fax (702) 938-5454

DETAIL SHEET

DIALYSIS CENTER
900 MAIN STREET, Lv. Nv. 89101

DRAWN BY: E. KUROIWA 12.24.03
DESIGNED BY: E. KUROIWA 12.24.03
CHECKED BY: K. HAND 12.24.03
PROJECT NO: 240938
SCALE: N/A HORIZ. N/A VERT.

STEVEN VIC BUSKEVICIUS CIVIL EXP. 12/31/04 No.14231 STATE OF NEVADA PROFESSIONAL ENGINEER
1/7/04

SHEET
C-4
4 OF 4 SHEETS
DRAWING NO.
10V3949

APPROVED

LAS VEGAS VALLEY WATER DISTRICT (PROJECT #28941) — DATE 1/8/04

Call before you Dig. 1-800-227-2600 UNDERGROUND SERVICE ALERT (USA)
Call before you Overhead 1-702-593-6111

64932-01CM