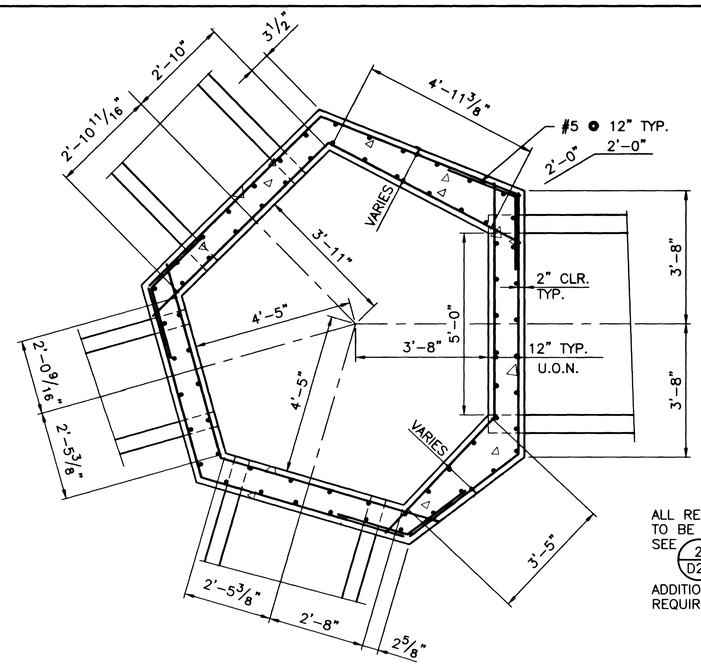

ALL REINFORCEMENT IN WALLS TO BE #5 @ 12" E.W., E.F. SEE 2/D21 AND 3/D21 FOR ADDITIONAL REINF. CUT AS REQUIRED AT PIPE OPENINGS

REINFORCEMENT PLAN

1/2" = 1'-0"

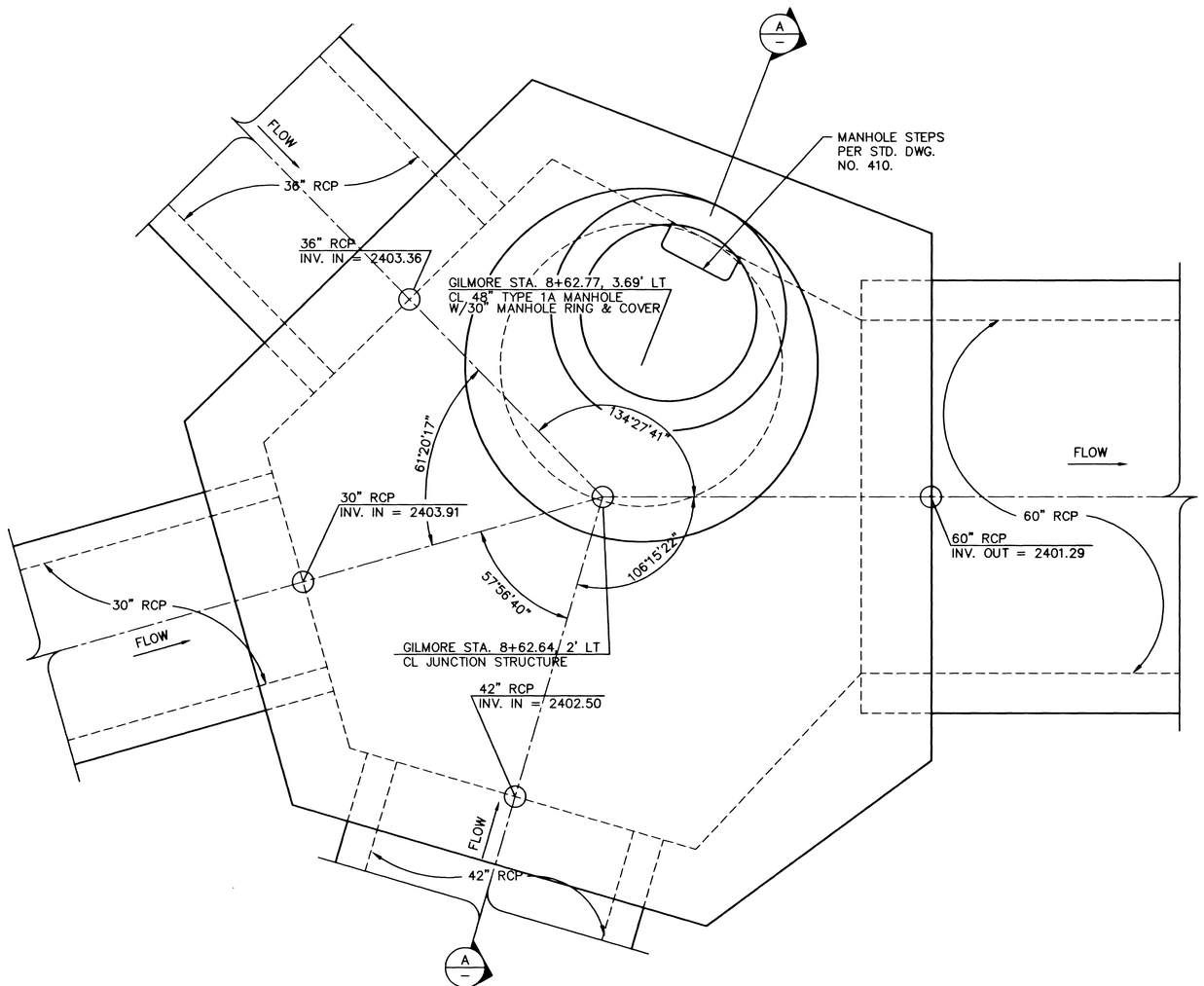

PLAN

1" = 1'-0"

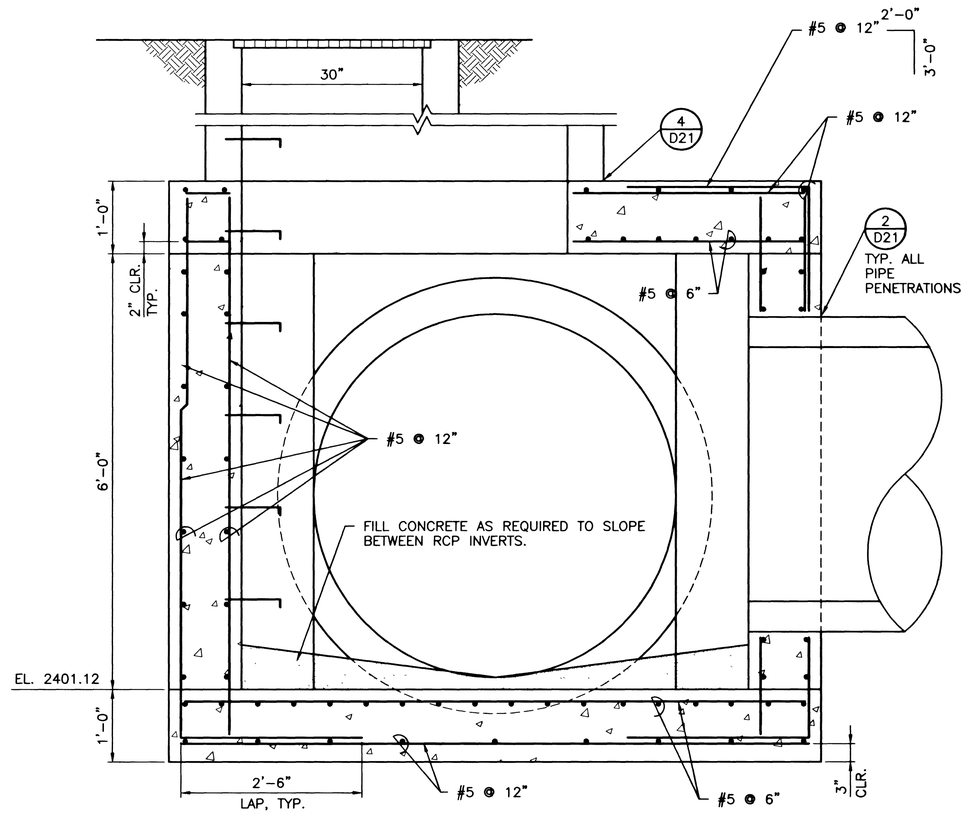

SECTION

1" = 1'-0"

A/D13

REV	DATE	BY	REVISION

DEPARTMENT OF PUBLIC WORKS
CITY OF LAS VEGAS

vtn nevada

CONSULTING ENGINEERS • PLANNERS • LAND SURVEYORS
2727 SOUTH MARYLAND BOULEVARD
LAS VEGAS, NEVADA 89109-5949 PHONE (702) 735-7900 FAX (702) 386-3897

R2H • CB&L ENGINEERING
Consulting Structural Engineers
840 GREEN DISTR. Ste. 350
LAS VEGAS, NEVADA 89113
(702) 386-9700
Fac: (702) 386-9709

TITLE: STRUCTURAL DETAILS
JUNCTION STRUCTURE
GILMORE STA. 8+62.64

PROJECT: DURANGO DRIVE IMPROVEMENTS
CHEYENNE AVENUE TO LONE MOUNTAIN ROAD

SEAL: PROFESSIONAL ENGINEER-STATE OF NEVADA
DAVID W. SEELEY
CIVIL
No. 11175
7/24/98

WO NO.	5249
BY	WSW
DATE	7/17/98
SCALE HORIZ. VERT.	
DRAWING	D13
SHEET 19 OF 106 SHEETS	

98072D13.dwg 6-18-98 7:39:11 am EST

27422