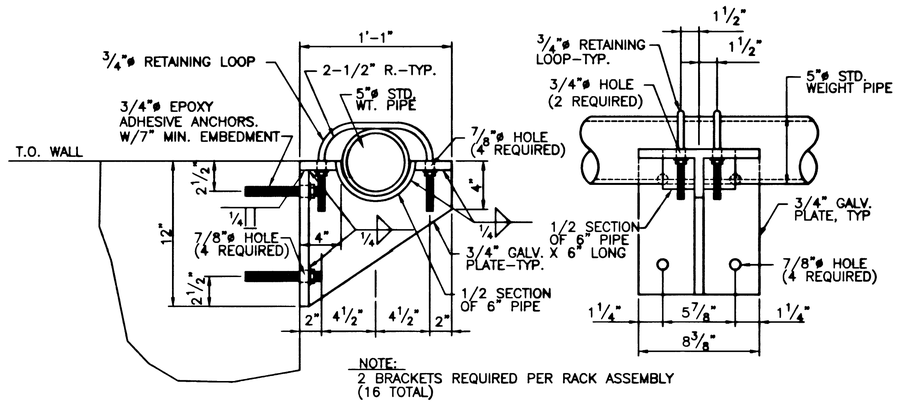

TRASH RACK WALL BRACKET

SCALE: N.T.S. — 1 / D20

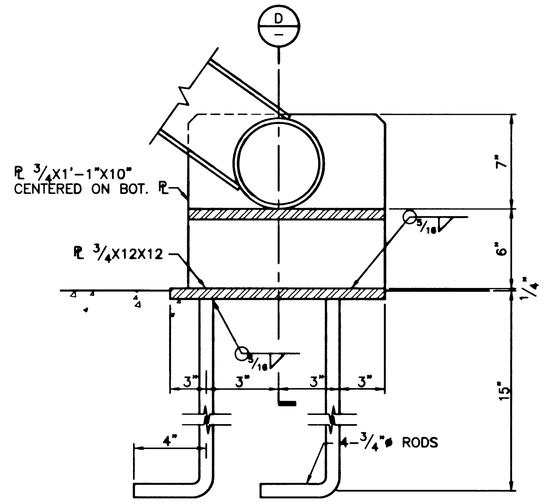

TRASH RACK FLOOR BRACKET

SCALE: N.T.S. — C / D20

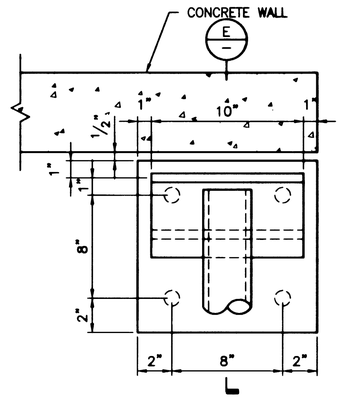

PLAN VIEW FLOOR BRACKET AT WALL

SCALE: N.T.S. — 3 / D20

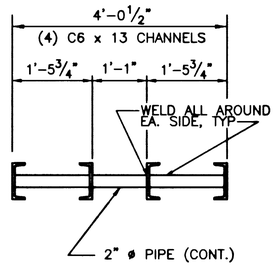

SECTION

SCALE: N.T.S. — B / D20

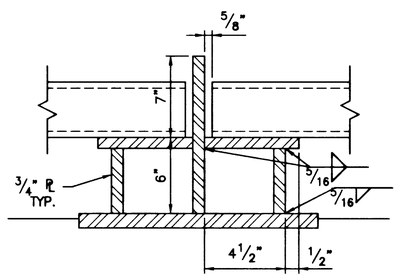

SECTION

SCALE: N.T.S. — D / D20

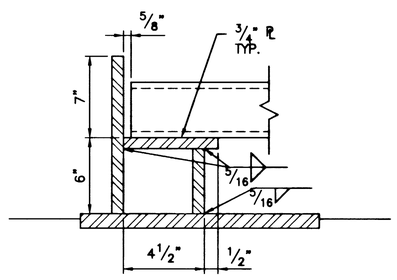

SECTION

SCALE: N.T.S. — E / D20

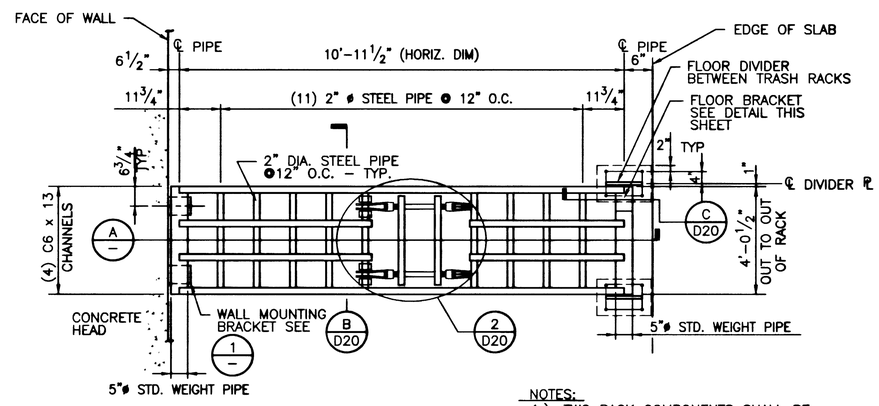

NOTES:
1.) TWO RACK COMPONENTS SHALL BE FABRICATED FOR PLACEMENT SIDE BY SIDE ON THE INLET STRUCTURE.
2.) HOT DIP GALVANIZE EACH ENTIRE ASSEMBLY INCLUDING WALL & FLOOR BRACKETS AFTER FABRICATION.

PLAN VIEW

TRASH RACK COMPONENT

SCALE: N.T.S.

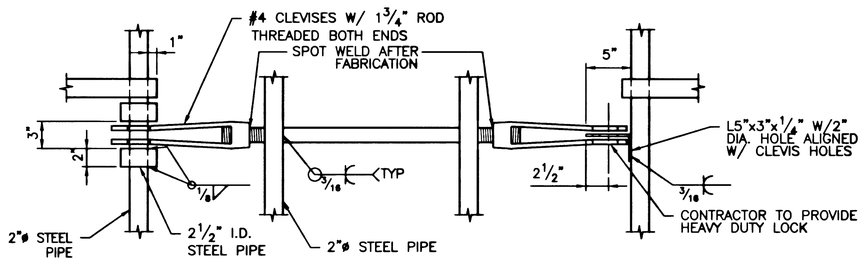

LOCK DETAIL

SCALE: N.T.S. — 2 / D20

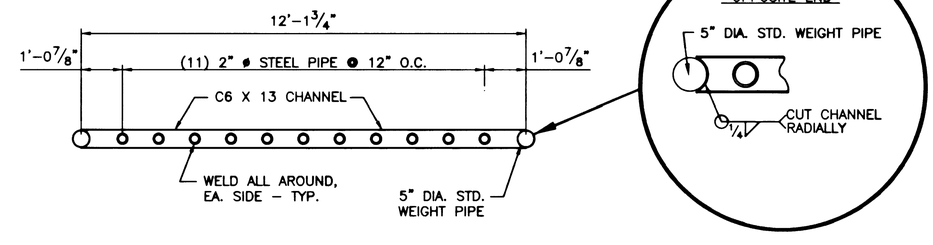

SECTION

SCALE: N.T.S. — A / D20

RECORD DRAWING 03/23/01

32210

9807/2D20.dwg 5-28-98 4:40:52 pm EST

REV	DATE	BY	REVISION

R2H•CB&L ENGINEERING
Consulting Structural Engineers
Las Vegas, Nevada 89113
Tel (702) 896-9000
Fax (702) 896-9005

CONSULTING ENGINEERS • PLANNERS • LAND SURVEYORS
LAS VEGAS, NEVADA 89107 PHONE (702) 878-7050 FAX (702) 878-8467

vtn nevada

DEPARTMENT OF PUBLIC WORKS
CITY OF LAS VEGAS

TITLE: TRASH RACK DETAILS

PROJECT: DURANGO DRIVE IMPROVEMENTS
CHEYENNE AVENUE TO LONE MOUNTAIN ROAD

SEAL

WO NO. 5249
BY WSW
DATE 7/17/98
SCALE HORIZ. VERT.
DRAWING D20
SHEET 26 OF 106 SHEETS