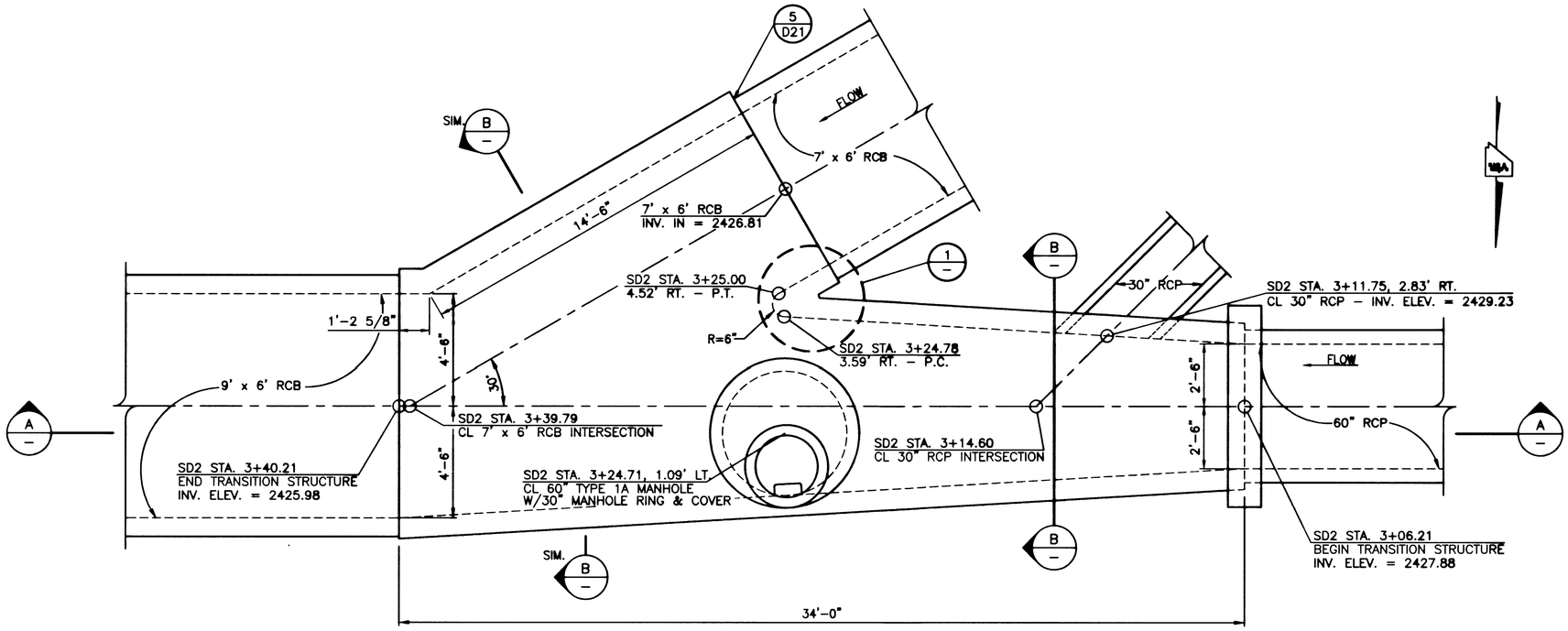

PLAN VIEW

3/8" = 1'-0"

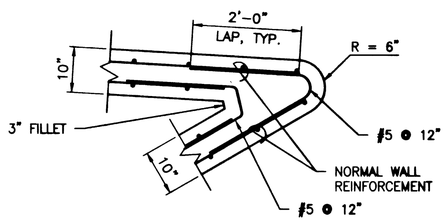

SECTION

3/4" = 1'-0" (1 / D8)

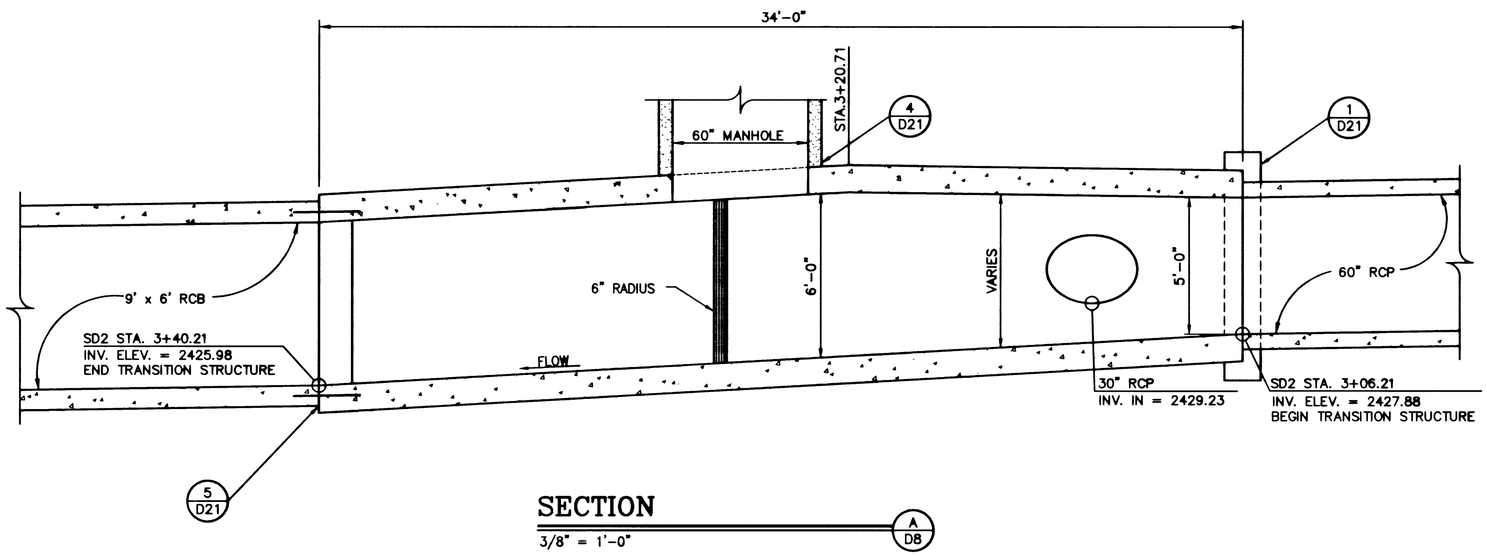

SECTION

3/8" = 1'-0" (A / D8)

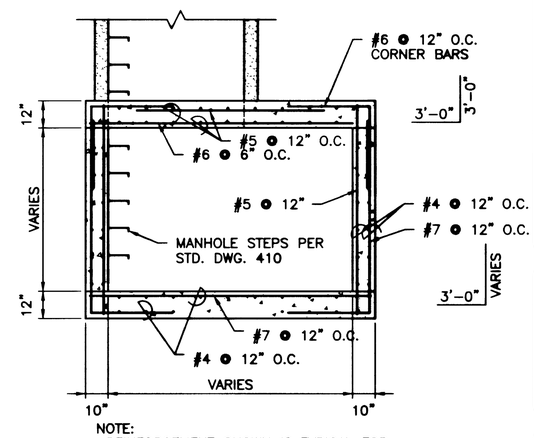

NOTE:
REINFORCEMENT SHOWN IS TYPICAL FOR ALL WALLS & SLABS

SECTION

3/8" = 1'-0" (B / D8)

GENERAL STRUCTURAL NOTES

1. DESIGN CRITERIA: ACI 318-95, AASHTO "STANDARD SPECIFICATIONS FOR HIGHWAY BRIDGES, 15TH EDITION"
2. DESIGN LIVE LOAD IS AASHTO HS20-44 TRUCK LOADING.
3. PORTLAND CEMENT SHALL CONFORM TO A.S.T.M. C-150, TYPE V AGGREGATE SHALL CONFORM TO A.S.T.M. C-33
4. ALL STRUCTURAL CONCRETE SHALL DEVELOP A MINIMUM COMPRESSIVE STRENGTH OF 4000 PSI AT 28 DAYS.
5. ALL REINFORCEMENT STEEL SHALL BE ASTM DESIGNATION A615 GRADE 60.
6. COVERAGE FOR REINFORCING BARS, EXCEPT WHERE OTHERWISE SHOWN, SHALL BE: 3" FOR CONCRETE PLACED AGAINST EARTH; 2" FOR OTHERS.
7. USE 3/4" CHAMFER ON ALL EXPOSED CORNERS.
8. ALL REINFORCING BAR LAP SPLICES SHALL CONFORM TO ACI 318-95.

RECORD DRAWING 03/23/01

REV	DATE	BY	REVISION

R&H • CB&L ENGINEERING
Consulting Structural Engineers
Las Vegas, Nevada 89119
Fax (702) 896-7908

CONSULTING ENGINEERS • PLANNERS • LAND SURVEYORS
Las Vegas, Nevada 89119-3743 Phone (702) 896-7900 Fax (702) 896-7908

DEPARTMENT OF PUBLIC WORKS
CITY OF LAS VEGAS

nevada

TITLE: STRUCTURAL DETAILS
JUNCTION STRUCTURE
SD2 STA. 3+06.21 TO 3+40.21

PROJECT: DURANGO DRIVE IMPROVEMENTS
CHEYENNE AVENUE TO LONE MOUNTAIN ROAD

SEAL

WO NO. 5249
BY WSW
DATE 7/17/98
SCALE HORIZ. VERT.
DRAWING D8
SHEET 14 OF 106 SHEETS

98072D08.dwg 7998 74221

32198